BOTTOM VIEW

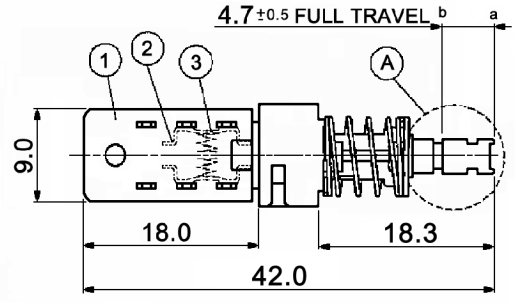

CIRCUIT DIAGRAM

C: COMMON PIN
BOTTOM VIEW

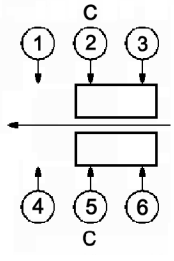

non-shorting
latching

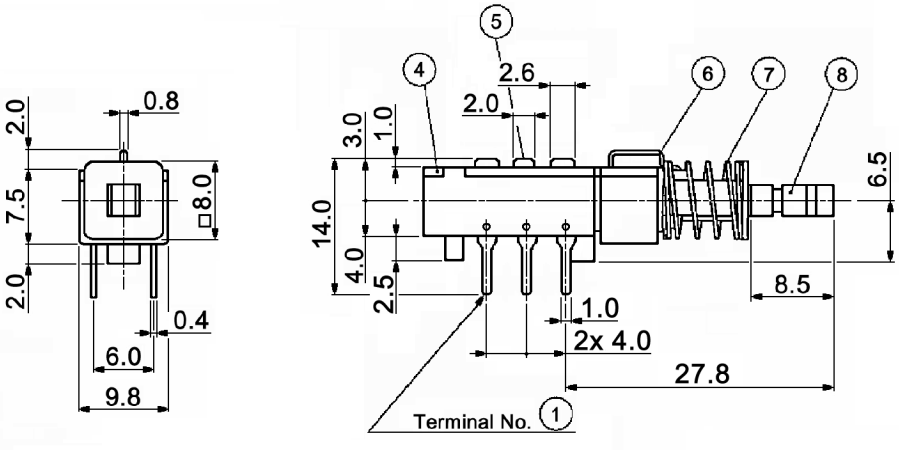

DETAIL A

3:1

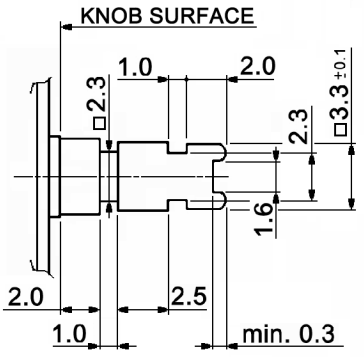

HOLE LAYOUT ⊕ 0.05

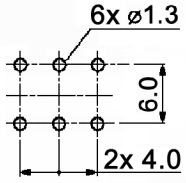

Specifications:

Contact rating:	1A, 25V DC; 0.5A, 100V AC
Contact resistance:	10mOhm max.
Insulation resistance:	100MOhm min. at 500V DC for 1 minute
Dielectric strength:	500V AC for 1 minute (50/60Hz, 2mA)
Operating temperature:	-10°C to +60°C
Mechanical life:	30 000 cycles
Operating force:	300gf +/-100gf
Soldering conditions:	260 +/-5°C, 5 +/-1sec.
Material:	1 - Case: PA66, black
	2 - Contact plate: C5210R-EH, 2µm silver plated over 2µm nickel
	3 - Spring: stainless steel, temper
	4 - Base: phenolic resin, natural
	5 - Terminal: brass strip, 0.5µm silver plated over 2µm nickel
	6 - Spring wire: SWC, 0.5µm silver plated over 2µm nickel
	7 - Spring: SWC, temper
	8 - Slider: POM, white

Compliance: RohS II (2011/65/EU)

Tolerances: up to 10: ±0.2mm above 10-50: ±0.3mm			Date	Name	MPBS22H01L-F14	
			11/10	dr		
Timing	07/14	dr	knitter-switch		30 22 36	Page
Material details	02/11	dr				1/1
Modifications	Date	Name				