IN5458

Inductive sensor

INS3002DBPKG/US-100-YPS/S6A/14

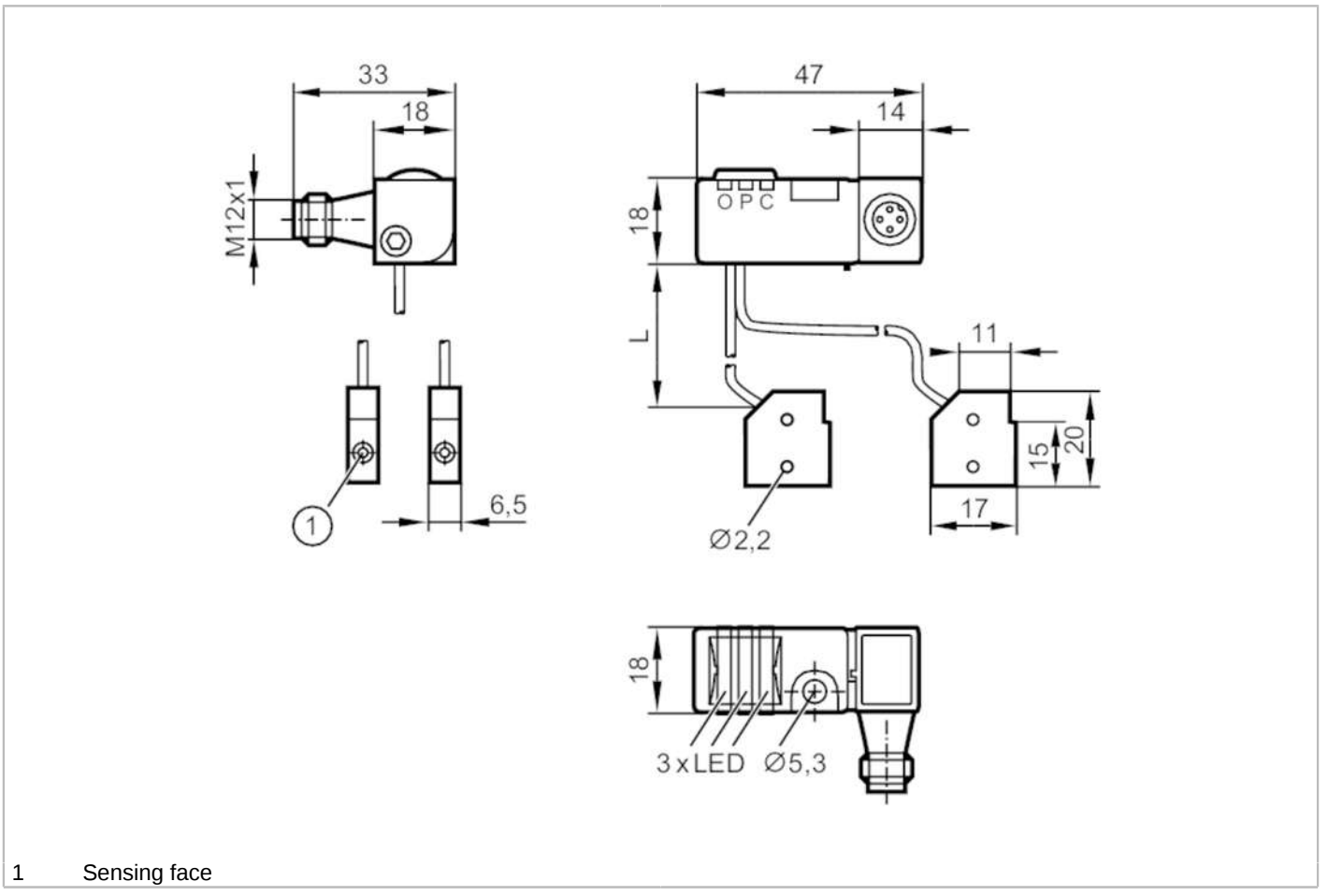

1 Sensing face

CE

Product characteristics		
Electrical design		PNP
Output function		2 x normally open
Sensing range	[mm]	2
Housing		rectangular
Application		
Special feature		Magnetic-field immune
Magnetic-field immune		yes
Electrical data		
Operating voltage	[V]	10...30 DC
Current consumption	[mA]	15; (24 V)
Protection class		II
Reverse polarity protection		yes
Outputs		
Electrical design		PNP
Output function		2 x normally open
Max. voltage drop switching output DC	[V]	2

IN5458

Inductive sensor

INS3002DBPKG/US-100-YPS/S6A/14

Permanent current rating of switching output DC	[mA]	200	
Switching frequency DC	[Hz]	25	
Short-circuit protection		yes	
Type of short-circuit protection		pulsed	
Overload protection		yes	
Detection zone			
Sensing range	[mm]	2	
Real sensing range Sr	[mm]	2 ± 10 %	
Operating distance	[mm]	0...1.62	
Accuracy / deviations			
Correction factor		steel: 1 / stainless steel: 0.85 / aluminium: 0.4 / copper: 0.3	
Switch point drift	[% of Sr]	-10...10	
Operating conditions			
Ambient temperature	[°C]	-25...70	
Protection		IP 67	
Tests / approvals			
EMC		IEC61000	
Mechanical data			
Weight	[g]	59.5	
Housing		rectangular	
Mounting		non-flush mountable	
Materials		housing: ABS	
Length L	[mm]	140	
Displays / operating elements			
Display		switching status	1 x LED, yellow sensor 1
		switching status	1 x LED, red sensor 2
		operation	LED, green
Remarks			
Pack quantity		1 pcs.	
Electrical connection			

Connector: 1 x M12; coding: A



IN5458

Inductive sensor

INS3002DBPKG/US-100-YPS/S6A/14

Connection

