V 600

3½ Digit LCD Voltmeter Module

PRODUCT DESCRIPTION

The V 600 features a 200mV d.c. measurement range with auto-zero and auto-polarity. Decimal points are user selectable. The display features a low battery warning annunciator, which can be driven by external circuitry. The module's low cost means it will suit most high volume applications.

FEATURES

- Low Cost
- 15mm (0.6") Digit Height
- 200mV d.c. Full Scale Reading
- 1mA (typ) @ +9V d.c. Power Supply
- Auto-zero and Auto-polarity
- User Selectable Decimal Points
- Compatible with Industry-Standard Types
- Supplied with Mounting Bezel

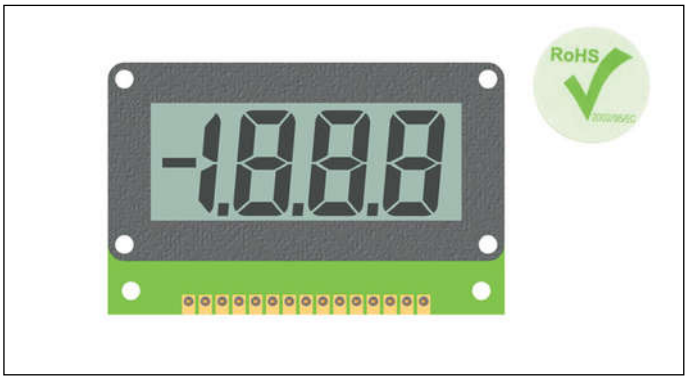

TYPICAL APPLICATIONS

- High Volume, Low Cost Systems
- Power Supply Monitoring
- Panel-Mount Indication

ORDERING INFORMATION

	Stock Number
Standard Meter	V 600

ELECTRICAL SPECIFICATIONS

Specification		Min.	Typ.	Max.	Unit
Accuracy (overall error) *			0.25		% (±3 counts)
Linearity	0-1000 reading		±3		counts
	0-2000 reading		±5		counts
Sample rate			3		samples/sec
Operating temperature range		0		50	°C
Temperature stability			300		ppm/°C
Supply voltage		7.0	9	12	V d.c.
Supply current			1	2	mA

* To ensure maximum accuracy, re-calibrate periodically.

SAFETY

To comply with the Low Voltage Directive (LVD 93/68/EEC), input voltages to the module's pins must not exceed 60Vdc. The user must ensure that the incorporation of the panel meter into the user's equipment conforms to the relevant sections of BS EN 61010 (Safety Requirements for Electrical Equipment for Measuring, Control and Laboratory Use).

LASCAR ELECTRONICS LTD.
MODULE HOUSE
WHITEPARISH
WILTSHIRE SP5 2SJ
UK
TEL: +44 (1794) 884567
FAX: +44 (1794) 884616
E-mail: sales@lascar.co.uk

LASCAR ELECTRONICS INC.
4258 WEST 12th STREET
ERIE
PA 16505
USA
TEL: +1 (814) 835 0621
FAX: +1 (814) 838 8141
E-mail: us-sales@lascarelectronics.com

LASCAR ELECTRONICS (HK) LTD.
8th FLOOR, CHINA AEROSPACE CENTRE,
143 HOI BUN ROAD,
KWUN TONG, KOWLOON,
HONG KONG
TEL: +852 2389 6502
FAX: +852 2389 6535
E- mail: saleshk@lascar.com.hk

DIMENSIONS All dimensions in mm (inches)

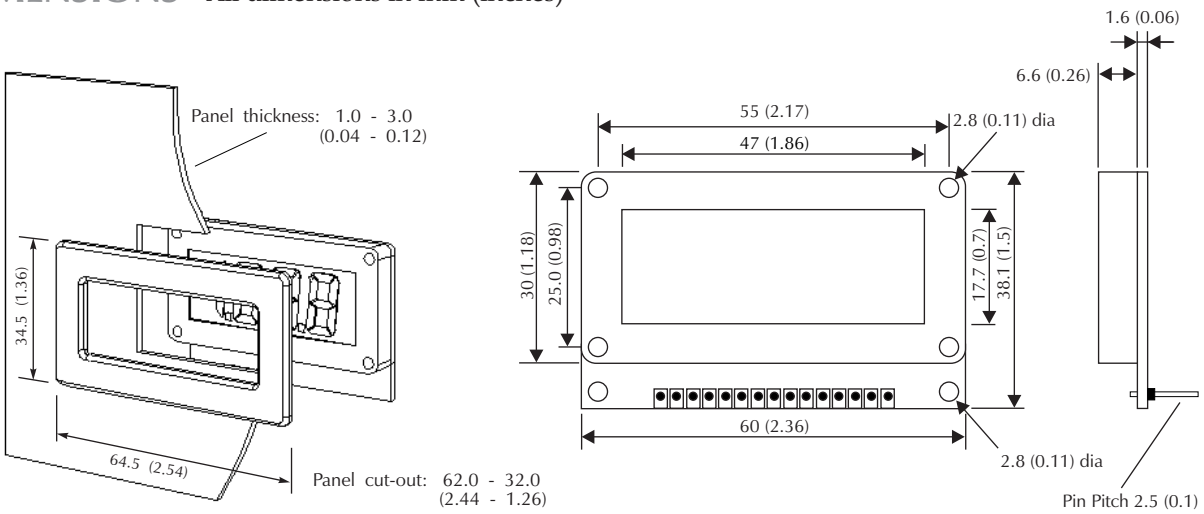

PANEL FITTING

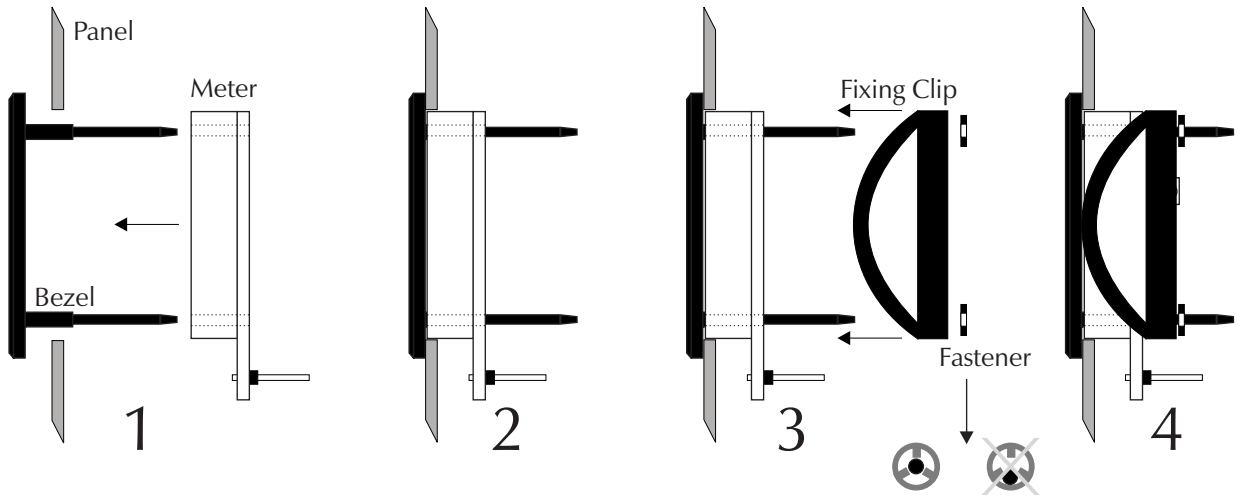

FUNCTIONAL BLOCK DIAGRAM

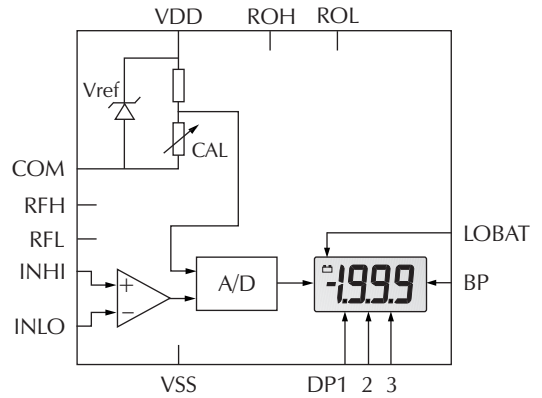

PIN CONFIGURATION (rear view)

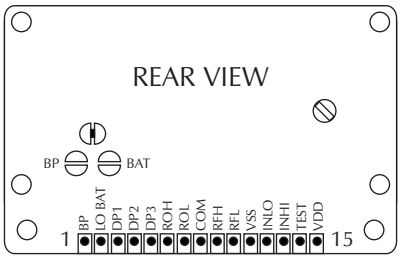

CIRCUIT DIAGRAM

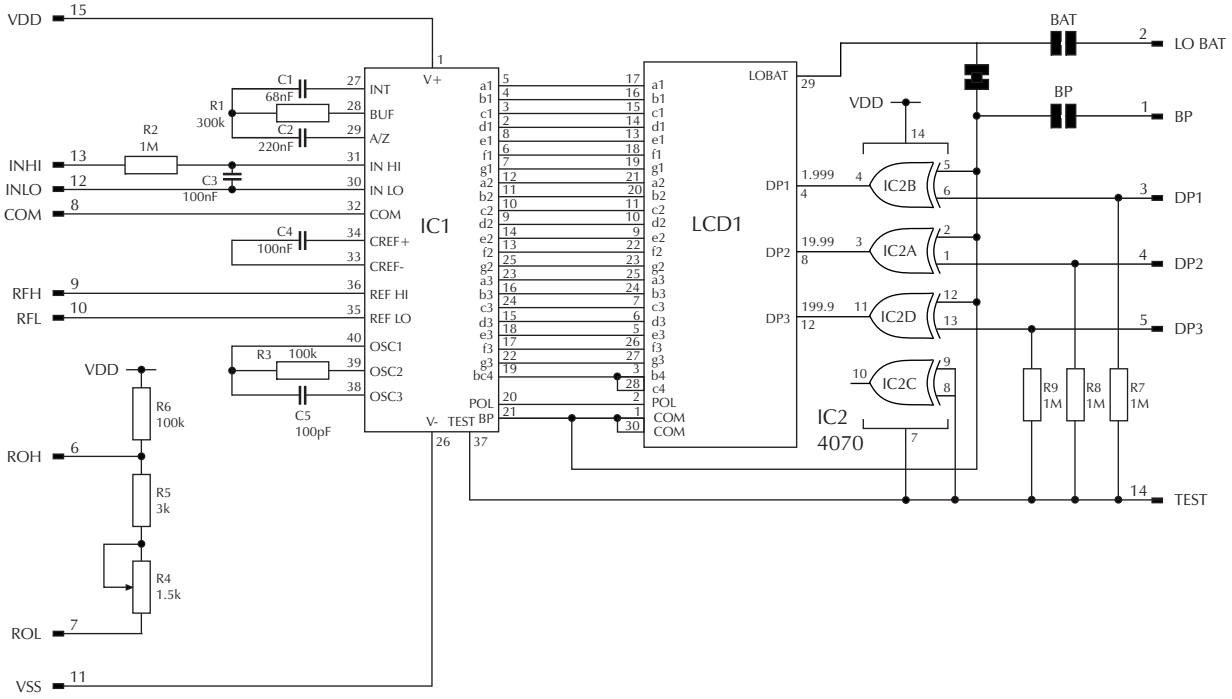

PIN FUNCTIONS

1. BP — Backplane connection from voltmeter IC.
2. LO BAT — LCD connection to "Low Battery" annunciator.

} See application diagram on next page.

3. DP1 — Connect to V+ to display Decimal Point 1 (1.999).
4. DP2 — Connect to VDD to display Decimal Point 2 (19.99).
5. DP3 — Connect to VDD to display Decimal Point 3 (199.9).
6. ROH — Positive output from internal reference.
7. ROL — Negative output from internal reference.
8. COM — The ground for the analogue section of the A/D converter, held actively at 2.8V (nom) below VDD.
   COM must not be allowed to sink excessive current (> 100µA) by connecting it directly to a higher voltage.
9. RFH — Positive input for reference voltage.
10. RFL — Negative input for reference voltage.
11. VSS — Negative power supply connection.
12. INLO — Negative measuring input with reference to IN HI.
13. INHI — Positive measuring input with reference to IN LO.

} Analogue inputs must be no closer than 1V to either the positive or negative supply.

14. TEST — Connecting this pin to VDD to turn on display segments "-1888".
    It should not be operated for more than a few seconds as the DC voltage applied to the LCD may "burn" the display.
    This pin is nominally at 5V below VDD and is the ground for the digital section of the meter, it can be used as a negative supply to power external logic up to a maximum of 1mA.
15. VDD — Positive power supply connection.

Solder Links:

BP — Normally Open.
BAT — Normally Open.

SCALING

Two resistors Ra and Rb may be used to alter the full scale reading (FSR) of the meter - see table. The meter will have to be re-calibrated by adjusting the calibration potentiometer on the rear of the module.

	FSR	Ra	Rb
Voltage Vin	2V	910k	100k
	20V	1M	10k
	200V	1M	1k
	2000V*	1M	100R
Current Iin	200µA	0R	1k
	2mA	0R	100R
	20mA	0R	10R
	200mA	0R	1R

*Ensure that Ra is rated for high voltage use.

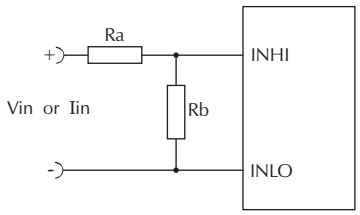

APPLICATIONS

Do not connect more than one meter to the same power supply if the meters cannot use the same signal ground. Taking any input beyond the power supply rails will damage the meter.

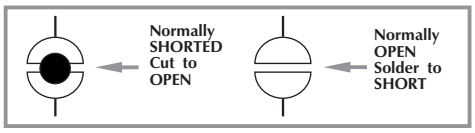

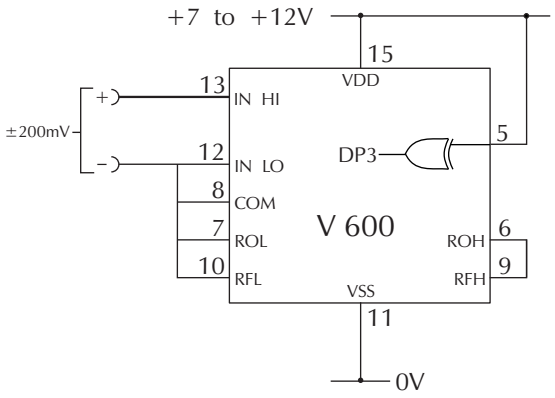

Measuring an input voltage referenced to a floating supply, i.e. the input voltage and the meter's power supply are isolated from each other.

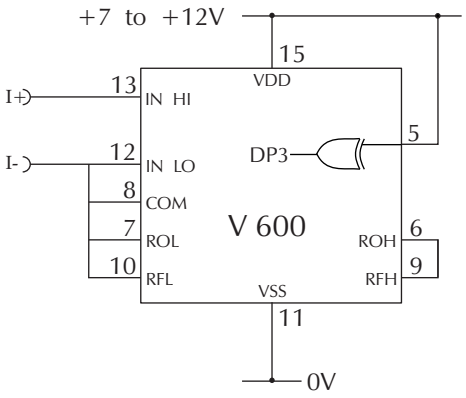

Measuring a current referenced to a floating supply, i.e. the current being measured and the meter's power supply are isolated from each other.

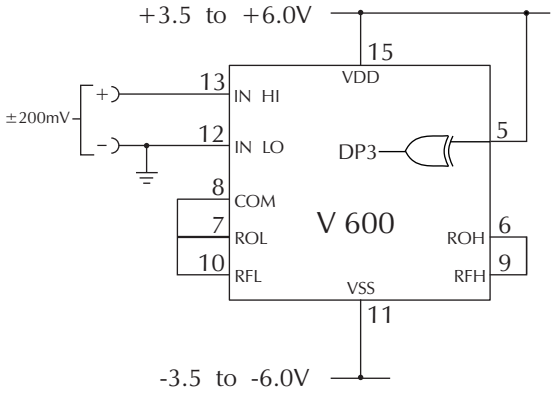

Measuring a single ended input referenced to supply, i.e. the input voltage and the meter's power supply share the same 0V rail.

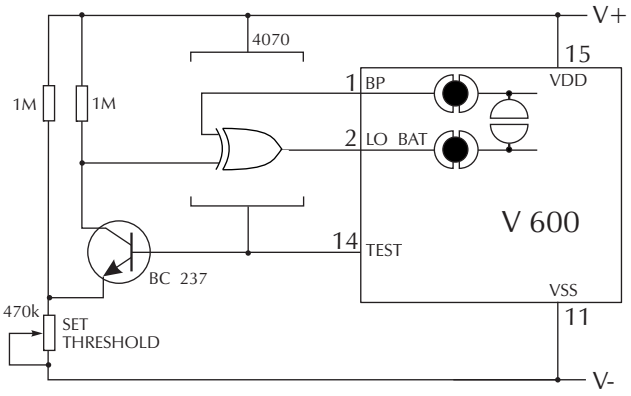

Driving the Battery annunciator with associated external logic and low battery detection circuitry.