Marquardt Mechatronik GmbH
Schloss-Str. 16
78604 Rietheim-Weilheim
Germany

Phone: +49 (0) 7424 / 99-0
Fax: +49 (0) 7424 / 99-2399
Net: www.marquardt.de
E-mail: marquardt@marquardt.de

Product image / Drawings



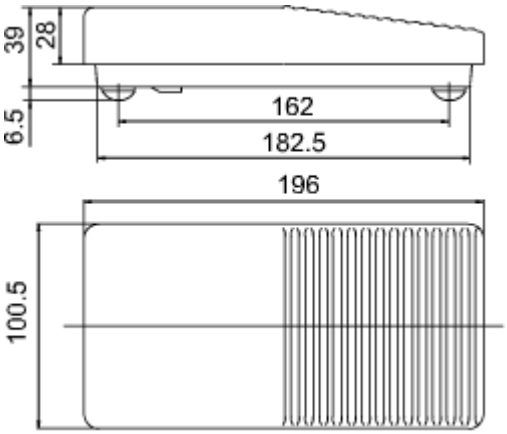

Technical data

Product number	**2410.1001**
Product family	Foot switches
Actuation type	direct
Weight	703.100 g
ROHS conform	yes
Switching function	Normally open contact (DPNO)
Material fixed contact	Ag
Number of poles	2 - pole
connections	Cable, assembled
Mechanical life endurance	30E4
Rating IEC	6 (2.5) A 250 V AC 5E4
Proof tracking	250 PTI
Insulation spacing	acc. to EN 61058 for reinforced or double insulation
Actuators and additional actuators	foot plate: PA, black, similar RAL 7024
Housing description	housing: PA, black, 4 rubber feet, opening for hanging up
Contact material	Ag
Contact distance	≥ 3 mm
Contact type	friction jump contact
Operating force	45 ±7 N N
Approval marks	ENEC 10
Miscellaneous	2 x 1005.1802 / 1 x PE connector (3 000 mm) / 1 x PE coupling (250 mm)
Stock version	●