This document was generated on 02/01/2023

PLEASE CHECK WWW.MOLEX.COM FOR LATEST PART INFORMATION

Part Number: 1200850004

Status: Active

Overview: Brad Ultra-Lock Connection System

Description: Ultra-Lock (M12) Single Keyway with PG7 Cable Fitting, Male, 5 Pole, Straight, Cable Diameter 3.30-6.60mm

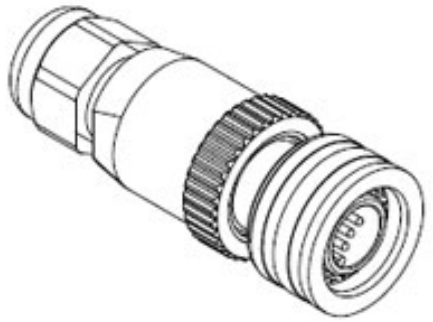

Series image - Reference only

Documents:

Drawing (PDF) | RoHS Certificate of Compliance (PDF)

Agency Certification

CSA	LR6837

General

Product Family	Field Attachable / Accessories
Series	120085
Approvals	cCSAus certified
IP Rating	IP69K
Material - Contact	Brass
Overview	Brad Ultra-Lock Connection System
Product Name	Ultra-Lock (M12)
Taxonomy	Circular Industrial Connectors
Type	Field Attachable Connector
UPC	78172553191

Physical

Cable Diameter	3.30-6.60mm (.130-.260")
Coupling Type	Push to Lock
Diagnostics / LEDs	No
Diagnostics Port	No
Gender	Male
Keyway	Single
Material - Connector Body	PA
Material - Coupling Nut	Nickel-plated Brass
Material - Plating Mating	Gold
Net Weight	20.240/g
Orientation	Straight
Poles	5
Temperature Range - Operating	-25°C to +90°C
Wire Size AWG	18

Electrical

Current - Maximum per Contact	4.0A
Voltage - Maximum	30V AC / 36V DC

Material Info

Engineering Number	WA5006-31

Reference - Drawing Numbers

Sales Drawing	1200850003-000, SD-120085-001-001

EU ELV
Not Relevant

EU RoHS | **China RoHS**
Compliant with Exemption 6(c)

REACH SVHC
Not Reviewed

Halogen-Free Status
Not Reviewed

For more information, please visit Contact US

China ROHS	50 Image
ELV	Not Relevant
RoHS Phthalates	Not Contained
ZZCERT_CE - Declaration of Conformity	CER_4000409988_00_000.pdf
ZZCERT_UKCA - Declaration of Conformity	CER_4000410300_00_000.pdf

Search Parts in this Series
120085 Series

This document was generated on 02/01/2023

PLEASE CHECK WWW.MOLEX.COM FOR LATEST PART INFORMATION