Current Transducer LF 1005-S

I_{PN} = 1000 A

For the electronic measurement of currents: DC, AC, pulsed..., with a galvanic isolation between the primary circuit (high power) and the secondary circuit (electronic circuit).

16110

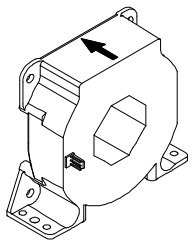

Electrical data

I_{PN}	Primary nominal current rms			1000			A
I_{PM}	Primary current, measuring range @ ± 24 V			0 .. ± 1500			A
R_M	Measuring resistance @		T_A = 70°C		T_A = 85°C		
			$R_{M\,min}$	$R_{M\,max}$	$R_{M\,min}$	$R_{M\,max}$	
	with ± 15 V	@ ± 1000 A_{max}	0	18	0	15	Ω
		@ ± 1200 A_{max}	0	7	0	4	Ω
	with ± 24 V	@ ± 1000 A_{max}	5	60.5	10	57.5	Ω
		@ ± 1500 A_{max}	5	24	10	21	Ω
I_{SN}	Secondary nominal current rms			200			mA
K_N	Conversion ratio			1 : 5000			
V_C	Supply voltage (± 5 %)			± 15 .. 24			V
I_C	Current consumption (± 1 mA)			28 (@ ± 24 V) + I_S			mA

Accuracy - Dynamic performance data

X	Accuracy @ I_{PN}, T_A = 25°C			± 0.4	%
ε_L	Linearity error			< 0.1	%
			Typ	Max	
I_O	Offset current @ I_P = 0, T_A = 25°C			± 0.4	mA
I_{OM}	Magnetic offset current @ I_P = 0 and specified R_M, after an overload of 3 x I_{PN}			± 0.2	mA
I_{OT}	Temperature variation of I_O	- 10°C .. + 85°C	± 0.3	± 0.5	mA
		- 40°C .. - 10°C		± 0.8	mA
t_r	Response time [1] to 90 % of I_{PN} step			< 1	µs
di/dt	di/dt accurately followed			> 100	A/µs
BW	Frequency bandwidth (- 1 dB)			DC .. 150	kHz

General data

T_A	Ambient operating temperature		- 40 .. + 85	°C
T_S	Ambient storage temperature		- 45 .. + 100	°C
R_S	Secondary coil resistance @	T_A = 70°C	48	Ω
		T_A = 85°C	51	Ω
m	Mass		550	g
	Standards		EN 50178: 1997	

Note : [1] With a di/dt of 100 A/µs.

Features

- Closed loop (compensated) current transducer using the Hall effect
- Isolated plastic case recognized according to UL 94-V0.

Advantages

- Excellent accuracy
- Very good linearity
- Low temperature drift
- Optimized response time
- Wide frequency bandwidth
- No insertion losses
- High immunity to external interference
- Current overload capability.

Applications

- AC variable speed drives and servo motor drives
- Static converters for DC motor drives
- Battery supplied applications
- Uninterruptible Power Supplies (UPS)
- Switched Mode Power Supplies (SMPS)
- Power supplies for welding applications.

Application Domain

- Industrial.

LEM reserves the right to carry out modifications on its transducers, in order to improve them, without prior notice.

Current Transducer LF 1005-S

Isolation characteristics

V_d	Rms voltage for AC isolation test, 50 Hz, 1 mn	3.8	kV
$\hat{V}_w$	Impulse withstand voltage 1.2/50 µs	16	kV
		Min	
dCp	Creepage distance	20.6	mm
dCl	Clearance distance	19.6	mm
CTI	Comparative Tracking Index (Group IIIa)	175	

Application examples

According to EN 50178 and CEI 61010-1 standards and following conditions:

- Over voltage category OV 3
- Pollution degree PD2
- Non-uniform field

	EN 50178	CEI 61010-1
dCp, dCl, $\hat{V}_w$	Rated isolation voltage	Nominal voltage
Single isolation	1500 V	2000 V
Reinforced isolation	1000 V	1000 V

Safety



This transducer must be used in electric/electronic equipment with respect to applicable standards and safety requirements in accordance with the manufacturer's operating instructions.



Caution, risk of electrical shock

When operating the transducer, certain parts of the module can carry hazardous voltage (eg. primary busbar, power supply).
Ignoring this warning can lead to injury and/or cause serious damage.
This transducer is a built-in device, whose conducting parts must be inaccessible after installation.
A protective housing or additional shield could be used.
Main supply must be able to be disconnected.

LEM reserves the right to carry out modifications on its transducers, in order to improve them, without prior notice.

Dimensions LF 1005-S (in mm. 1 mm = 0.0394 inch)

Bottom view

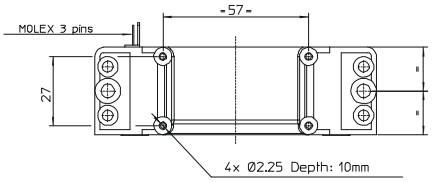

Back view

Front view

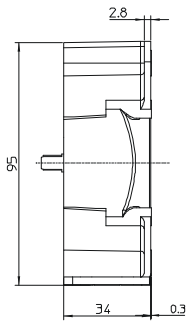

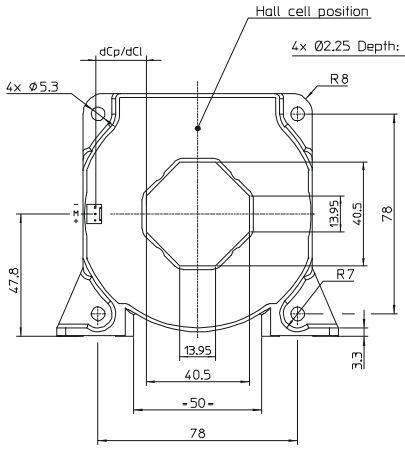

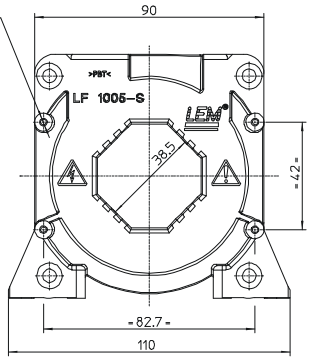

Top view

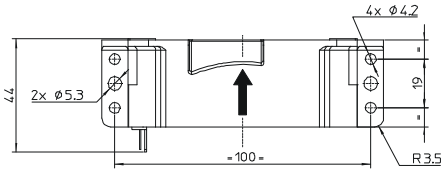

Connection

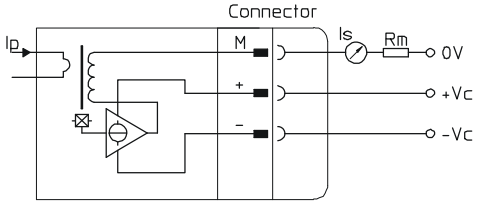

Mechanical characteristics

• General tolerance	± 0.5 mm
• Transducer fastening	
Vertical position	2 holes ∅ 5.3 mm
	2 M5 steel screws
Recommended fastening torque	4 Nm or 2.96 Lb. - Ft.
or	4 holes ∅ 4.2 mm
	4 M4 steel screws
Recommended fastening torque	3.2 Nm or 2.37 Lb. - Ft.
or	4 holes ∅ 2.25 mm depth10 mm
	4 x PT KA30 screws long 10 mm
Recommended fastening torque	0.9 Nm or 0.66 Lb. - Ft.
• Transducer fastening	
Horizontal position	4 holes ∅ 5.3 mm
	4 M5 steel screws
Recommended fastening torque	4 Nm or 2.96 Lb. - Ft.
or	4 holes ∅ 2.25 mm depth16 mm
	4 x PT KA30 screws long 16 mm
Fastening torque, maxi	1 Nm or 0.74 Lb. - Ft.
• Primary through-hole	40.5 x 13 mm
or	∅ 38 mm
• Connection of secondary	Molex 6410
	3 Tin plated pins.

Remarks

- I_S is positive when I_P flows in the direction of the arrow.
- Temperature of the primary conductor should not exceed 100°C.
- Dynamic performances (di/dt and response time) are best with a single bar completely filling the primary hole.
- This is a standard model. For different versions (supply voltages, turns ratios, unidirectional measurements...), please contact us.

LEM reserves the right to carry out modifications on its transducers, in order to improve them, without prior notice.