E33622

Process adapter Varivent

ADAPT IFM-VARIV D=68(DN40-125)

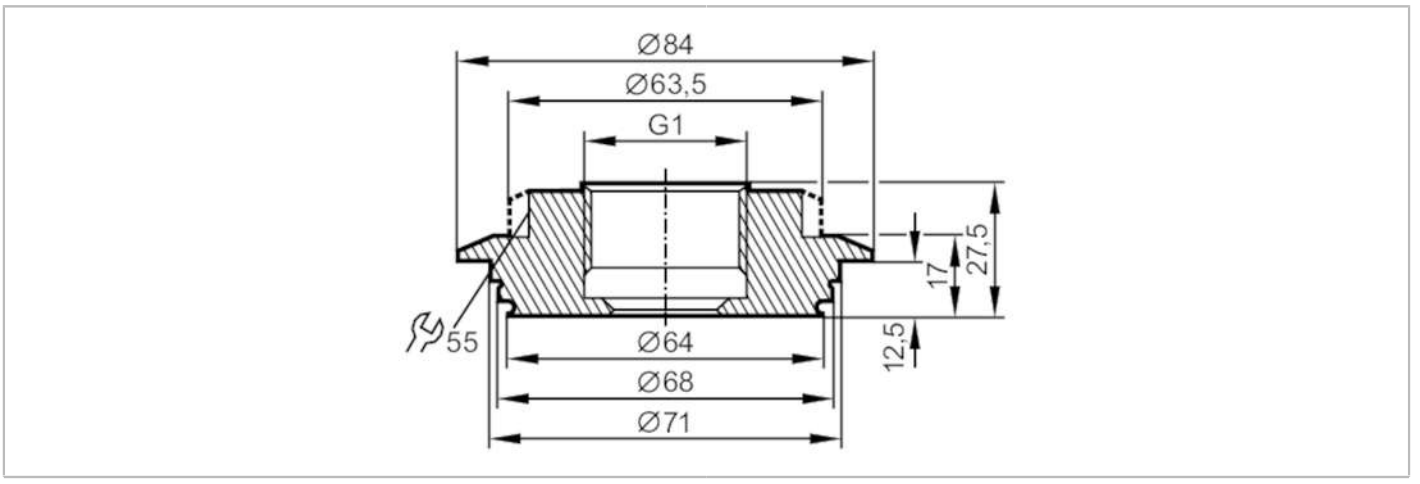

EC 1935/2004 EHEDG Tested FCM FDA

Application		
Pressure rating	[bar]	25
Tests / approvals		
Pressure Equipment Directive		A possible classification to PED depends on the application and has to be carried out by the user / operator.
Pressure Equipment Directive EAC		The adapter is intended for use in devices, machines and installations that do not fall under the categories of the technical rule TR CU 032/2013.
Safety instructions		The compatibility between medium and product material has to be checked in all applications.
Mechanical data		
Weight	[g]	649
Materials (wetted parts)		stainless steel (1.4404 / 316L) ; surface characteristics : Ra<0,4 / Rz 4
Sensor connection		G 1 sealing cone
Process connection		Varivent Form N, DN40...DN150 (1,5...6"), Ø 68 mm
Hygienic equipment class to DIN 11866		H4
Remarks		
Pack quantity		1 pcs.