CO_2 Display/CL11/CP11



CO_2 display



CP11



CL11

Benefits

- Measures and logs CO_2, relative humidity and temperature
- Rotronic HYGROMER® IN-1 humidity sensor
- Up to 40,000 data point memory

Applications

- Indoor air quality: classrooms, kindergartens, meeting rooms, open-plan offices, shopping centers, fitness studios

General Information

Order code	CO_2 Display	CL11	CP11
Sensors / Calibration	• HYGROMER® IN-1 humidity sensor • Calibration of humidity possible at 35/80 %RH • NDIR sensor with automatic calibration (ABC) • Manual calibration of CO_2 at 400 ppm		
Display	• Large, easy-to-read display of measured values • CO_2 indicator for quick recognition of air quality (GOOD/NORMAL/POOR) • REC LED to indicate data recording is in progress • Display of date and time	Large display with backlight	
Control panel	Large buttons for easy operation of the measuring instrument		
Connections	• Port for USB stick for data downloads • 12 VDC power supply	• Mini USB port for connection to a PC • 5 VDC power supply, for connection of the optionally available AC adapter	

Guidelines for a healthy indoor climate

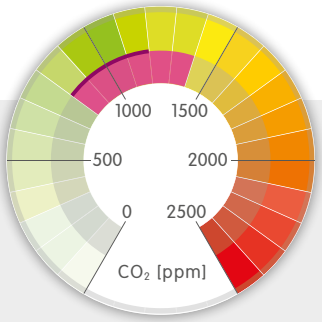

Recommendation: 800 - 1200 ppm
Optimum: 800 ppm
Maximum: 1400 ppm

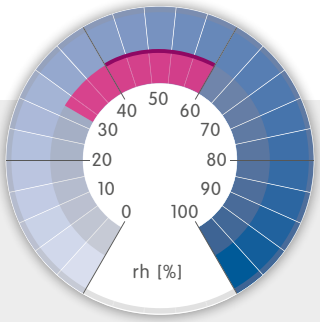

Recommendation: 40 - 60 %
Winter: 30 %
Summer: 60 %

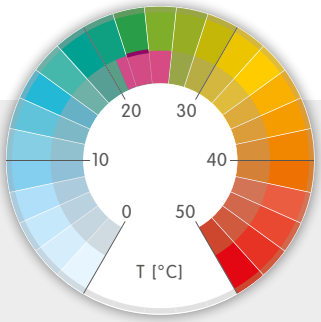

Recommendation: 22 - 24 °C
Winter: 21 °C
Summer: 26 °C

59100E/2020-12

Technical Information

			
	CO_2 Display	**CL11**	**CP11**
General Specifications			
Type	Wall or benchtop display unit	Benchtop display unit	Handheld device
Parameters	CO_2, relative humidity and temperature		CO_2, relative humidity, temperature, dew point & wet bulb temperature
Application range	0...50 °C / 0...95 %rh, non-condensing	0...50 °C / 0...100 %rh, non-condensing	
Clock	Real time clock with 4 min. battery backup	Real time clock with 2 min. battery backup	Real time clock
Alarm / Indicator	Adjustable for CO_2 measurement (visual)	Adjustable for CO_2 measurement (visual & audible)	Adjustable for CO_2 measurement (audible)
Instrument-Specific Data			
Current consumption	700 mA	50 mA	40 mA
Warm-up time	‹1 min.		
Memory capacity	• 19,500 values with time stamp • Automatic recording (%rh/°C/ppm)	• 40,000 values with time stamp • Automatic recording (%rh/°C/ppm)	• 18,000 values with time stamp • Automatic recording (%rh/°C/ppm) • 99 single values with time stamp • Manual recording (%rh/°C/DP/WBT/ppm)
CO_2 Measurement			
Measurement principle	Infrared (NDIR) with automatic calibration (ABC)		
Measuring range	0.....9999 ppm		
Accuracy at 23 °C ±5 K	±30 ppm ±5 % of the measured value @ 0...5000 ppm		
Resolution	1 ppm		
Adjustment point	400 ppm		
Pressure dependence	+1.6 % reading per kPa		
Null drift	‹10 ppm/year		
Maintenance	No maintenance (standard indoor applications)		
Humidity Measurement			
Humidity sensor	ROTRONIC HYGROMER® IN-1		
Measuring range	0...100 %rh		
Accuracy at 23 °C ±5 K	±2 %rh (10...90 %rh), others ±5 %rh		
Resolution	0.1 %rh		
Adjustment points	35, 80 %rh		
Response time τ63	‹30 s, without filter		
Long-term stability	‹1.5 %rh/year		
Temperature Measurement			
Sensor	NTC thermistor		
Measuring range	-20...60 °C		
Accuracy at 23 °C ±5 K	±0.3 K		
Resolution	0.1 °C		
Response time	4 s		
Software			
HW4 (SW21)	Available as download at www.rotronic.com		
Conformities / Housing			
CE / EMC compatibility	EMC Directive 2014/30/EU, EN 61326-1:2012		
Housing material	ABS		
Dimensions	330 x 250 x 50 mm	157 x 120 x 45 mm	76.7 x 41.8 x 233.9 mm
Weight	1400 g	200 g	290 g

Subject to technical change without notice. Printing and other errors reserved.

59100E/2020-12

Technical Information

Dimensions CO_2 Display

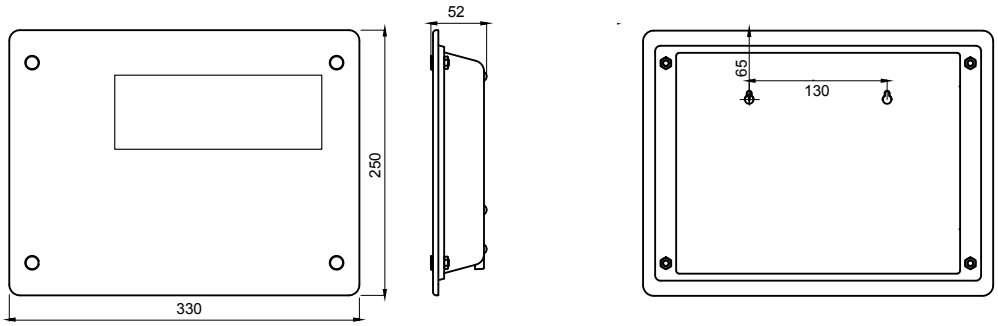

Dimensions CL11

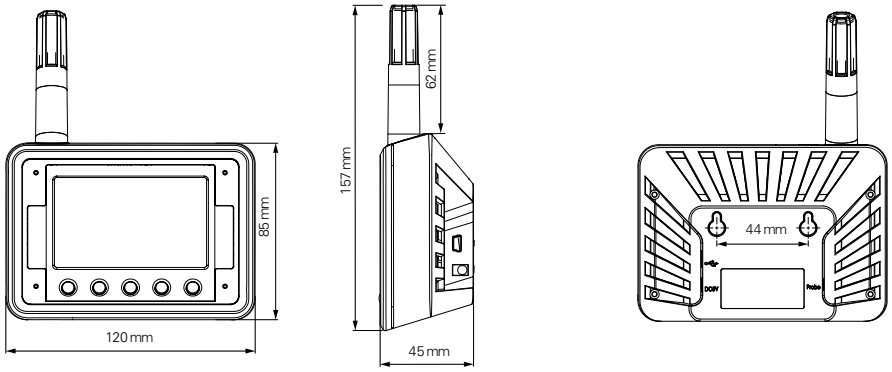

Dimensions CP11

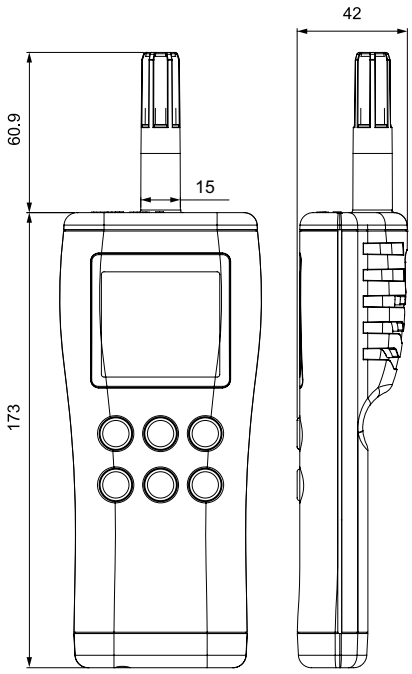

59100E/2020-12