SA1B2PA320R

Surge protection device type 1 and 2 monoblock, IEC impulse current Iimp (10/350µs) 25kA per pole, 2P. With remote contact



Product designation			Surge Protection Device (SPD)
Product type designation			SA1B
Operating voltage type			AC
Application			AC Power lines
Number of poles			2P
Number of DIN modules			4
Relay output			Yes
SPD according to IEC/EN 61643-11			YES
Electrical features			
IEC Maximum continuous voltage Uc		V	320
IEC Impulse current Iimp 10/350 (L-N/N-PE)		kA	25
IEC Maximum discharge current Imax 8/20 (L-N/N-PE)		kA	100
IEC Rated discharge current (IEC) In 8/20 (L-N/N-PE)		kA	25
IEC Voltage protection level Up (L-N/N-PE)		kV	<1.4
Temporary overvoltage (TOV) withstand Ut (L-N for 5s)		V	334
Temporary overvoltage (TOV) safe fail (L-N for 120min)		V	438
IEC Residual voltage Ures (L-N/N-PE) at 5kA (8/20)		kV	1
IEC Follow current If (N-PE) rms		A	No
Tripping time ta (L-N/N-PE)		ns	<25
Thermal insulation protection			YES
IEC Backup protection fuse with supply line fuse >250A (L-N/N-PE)		Class/A	250A gL/gG
IEC Maximum short circuit current at 50Hz		kA	50
Status indicator - operating / end of life			Frontal indication/Aux contact
Ambient conditions			
Operating temperature			
	min	°C	-40
	max	°C	+80
Max altitude		m	2000
Mechanical features			
Fixing			Din rail
Conductor section Flexible max (IEC)		mm²	25
Conductor section Rigid max (IEC)		mm²	35
Weight		g	395
Relay output for remote status indication			
Type of contact			CO
Rated current at			
	125V AC	A	3
	250V AC	A	0.5
	125V DC	A	0.2
	250V DC	A	0.1
Dimensions			

The characteristics described in this document are subject to updates or modifications at any time. The descriptions, technical and functional information, illustrations and instructions in this brochure are purely illustrative, and are consequently not contractually binding

SA1B2PA320R

Surge protection device type 1 and 2 monoblock, IEC impulse current Iimp (10/350µs) 25kA per pole, 2P. With remote contact

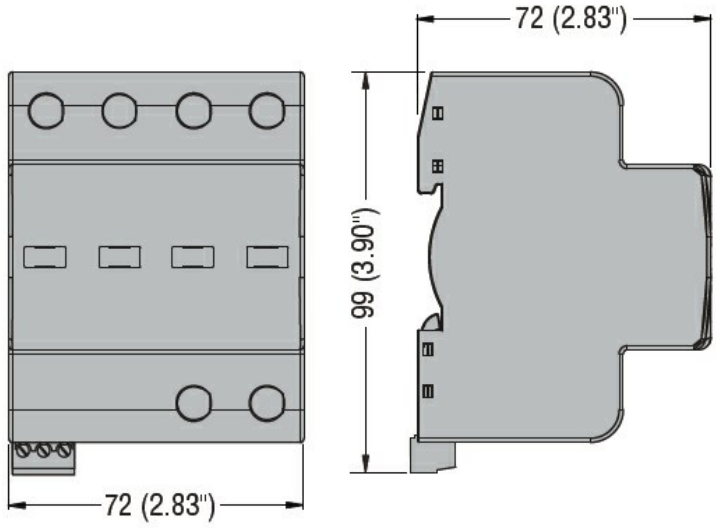

Wiring diagrams

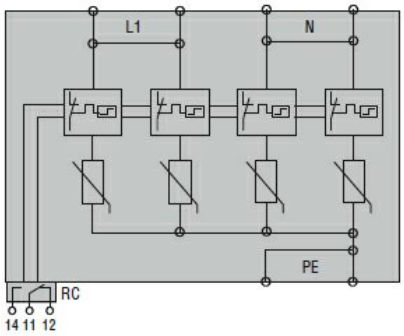

Certifications and compliance

Compliance

IEC/EN 61643-11

Certificates

EAC

ETIM classification

ETIM 8.0

EC000941 - Surge protection device for power supply systems

The characteristics described in this document are subject to updates or modifications at any time. The descriptions, technical and functional information, illustrations and instructions in this brochure are purely illustrative, and are consequently not contractually binding