SDM230-WiFi

Single-Phase Two Module DIN rail Meters

User Manual

2025 V1.0



- Measures kWh, kVArh, kW, kVAr, kVA, PF, Hz, dmd, V, A, etc.
- Bi-directional measurement IMP & EXP
- Two pulse outputs
- WiFi Communication
- Din rail mounting 35mm
- 100A direct connection
- Better than Class 1 / B accuracy

PART 1 Specification

1.1 General Specifications

• Voltage AC (Un)	230V
• Voltage Range	176~276V AC
• Base Current (Ib)	10A
• Max. Current (Imax)	100A
• Mini Current (Imin)	0.5A
• Starting Current	0.4% of Ib
• Power Consumption	<2W/10VA
• Frequency	50/60Hz(±10%)
• AC Voltage Withstand	4KV for 1 minute
• Impulse Voltage Withstand	6KV-1.2uS waveform
• Overcurrent Withstand	30 Imax for 0.01s
Pulse Output Rate	
• Pulse Output 1	1000/100/10/1 imp/Exp/ kWh/kVArh (configurable)
• Pulse Output 2	1000imp/kWh (default) for import kWh
• Display	LCD with white backlit
• Max. Reading	999999.9 kWh/kVArh

1.2 Accuracy

• Voltage	0.5% of range maximum
• Current	0.5% of nominal
• Frequency	0.2% of mid-frequency
• Power factor	1% of Unity
• Active power	1% of range maximum
• Reactive power	1% of range maximum
• Apparent power	1% of range maximum
• Active energy	Class 1 IEC62053-21 Class B EN50470-1/3
• Reactive energy	Class 2 IEC62053-23

1.3 Environment

- Operating temperature -25°C to +55°C
- Storage and transportation temperature -40°C to +70°C
- Reference temperature 23°C±2°C
- Relative humidity 0 to 95%, non-condensing
- Altitude up to 2000m
- Warm up time 5s
- Installation category CAT III
- Mechanical Environment M1
- Electromagnetic environment E2
- Degree of pollution 2

1.4 Output

Pulse Output

The meter provides two pulse outputs. Both pulse outputs are passive type.

Pulse output 1 is configurable. The pulse output can be set to generate pulses to represent total / import/export kWh or kVArh.

The pulse constant can be set to generate 1 pulse per: 0.001(default) /0.01/0.1/1kWh/kVArh.

Pulse width: 200/100/60ms

Pulse output 2 is non-configurable. It is fixed to import kWh. The constant is 2000imp/kWh.

Wi-Fi support: 2.4Ghz b/g/n

Wi-Fi data freq.: Every second

1.5 LCD display



PART 2 Operation

2.1 Initialization Display

When powered, the meter will initialize and self check.



Initialize



Software version



Software number



Self testing



AP distribution network

2.2 Signal symbol

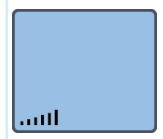

The signal bar on the display interface indicates the network strength and status, while connected, you will see between 0-6 bars indicating signal strength. If the signal bar is flashing simultaneously with 6 bars then this means the meter is not connected to the network.



Failed to connect to WiFi module

2.3 Scroll display by Button

After initialization and the self-checking program has run, the meter will display the measured values. The default page is the total kWh. If the user would like to check other information, they should press the WIFI button to scroll through the other pages.

The display order by scroll button:

Total kWh → import kWh → export kWh → resettable kWh → total kVArh → import kVArh → export kVArh → resettable kVArh → Max. power demand → voltage → current → W → VAr → VA → power factor → frequency → running time → server time → Version number of ESP32

2.4 Start-up Screens



Total active energy
Example: 70.00kWh



Import active energy
Example: 50.00kWh



Export active energy
Example: 20.00kWh



Total resettable energy



Total reactive energy
Example: 10.00kVArh



Import reactive energy
Example: 5.00kVArh



Export reactive energy
Example: 5.00kVArh



Total resettable reactive energy



Total Max. power demand
Example: 6930W



Voltage
Example: 229.8V



Current
Example: 30.156A



Active Power
Example: 4700W



Reactive Power
Example: 1030VAr



Apparent power
Example: 4811VA



Power factor
Example: 1.000

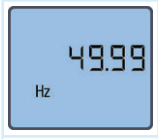

Frequency
Example: 49.99Hz

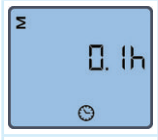

Running time
Example: 0.1h



Server time
Example: 01:01:01
Note: If not connected to the server, the meter will display offline



Version number of ESP32
Example: ESP04.04

2.5 Set-up Mode

To get into Set-up Mode, the user need press the 'Scroll button' button for 3 second.



The setting is done correctly

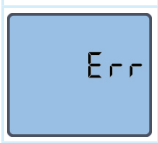

The entering information is wrong.
The operation fails.



Password
To get into set up mode, you will need to enter the default password below.
Default password: 1000

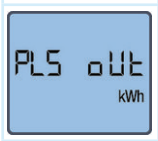

Pulse Output
Default: Export kWh
Option: kWh / kVArh / Imp. kWh / Exp.kWh / Imp.kVArh / Exp.kVArh



Hold down the **'Enter'** button, the red text will flash. Press the **'Scroll'** button to change the type.
After selecting the new pulsed output type, the user should hold down the **'Enter'** button to confirm the setting.

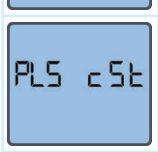

Pulse Constant
Default: 1000
Option: 1000 / 100 / 10 / 1



Hold down the **'Enter'** button, the red text will flash. Press the **'Scroll'** button to change the option.
After selecting the new pulse constant option, the user should hold down the **'Enter'** button to confirm the setting.



Pulse duration
Default: 100mS
Option: 200 / 100 / 60ms



Hold down the **'Enter'** button, the red text will flash. Press the **'Scroll'** button to change the option.
After selecting the new pulse duration option, the user should hold down the **'Enter'** button to confirm the setting.



Demand Integration Time
Default: 15 minutes
Option: 5 / 10 / 15 / 30 / 60 / OFF



Hold down the **'Enter'** button, the red text will flash. Press the **'Scroll'** button to change the option.
After selecting the new DIT option, the user should hold down the **'Enter'** button to confirm the setting.

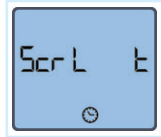

Automatic Scroll Time Interval
Default: 0 S
Option: 0 ~ 255S

Hold down the **'Enter'** button, the red text will flash. Press the **'Scroll'** button to change the option.
After selecting the new scroll time option, the user should hold down the **'Enter'** button to confirm the setting.

Backlight duration timer set-up
Default: 60 min
Option: 0 (OFF) / 5/ 10/ 20/ 30/ 60
Hold down the **'Enter'** button to enter set-up mode.

Press the **'Scroll'** button to change the backlight time.
After selecting the new backlight option. the user should hold down the **'Enter'** button to confirm the setting.

Clear
Hold down the **'Enter'** button to enter clear interface.

To clear the Max demand reading for active power, hold down the **'Enter'** button.

To clear the resettable energy readings, hold down the **'Enter'** button.

Password
Default: 1000

Hold down the **'Enter'** button, the red text will flash. Press the **'Scroll'** button to change the values.
After selecting the new password, hold down the **'Enter'** button to confirm the setting.

AP mode
Hold down the **'Enter'** button to enter AP mode setting.

Hold down the **'Enter'** button to set the AP mode.

Online update function
Hold down the **'Enter'** button to set the AP mode.

Online update function
Two options:
Meter: Meter update
ESP32: wifi module update

After all settings are completed
Good: Good means the setting was successful
ERR: ERR means the setting was unsuccessful

Sifam Tinsley Instrumentation Ltd
1 Warner Drive
Springwood Industrial Estate
Braintree, Essex CM7 2YW

Tel: +44 (0) 1376 335271
Email: sales@sifamtinsley.com
www.sifamtinsley.co.uk

2.6 **Wiring Diagram**

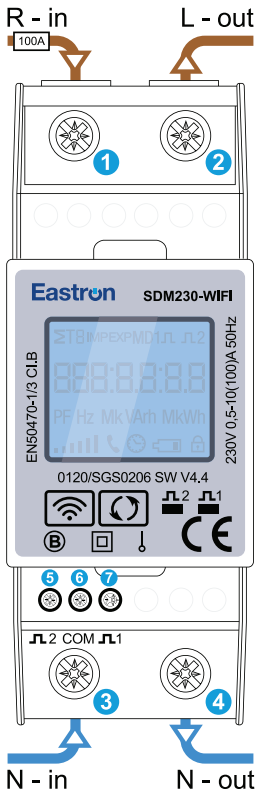

2.7 **Dimensions**

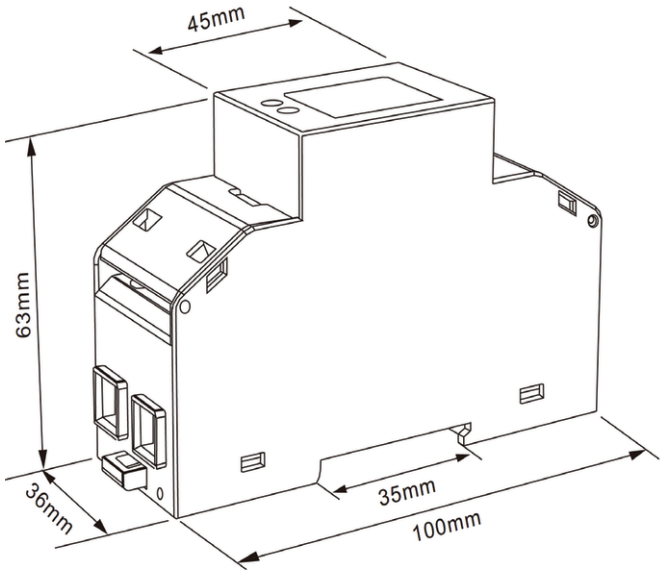

2.8 **Installation**

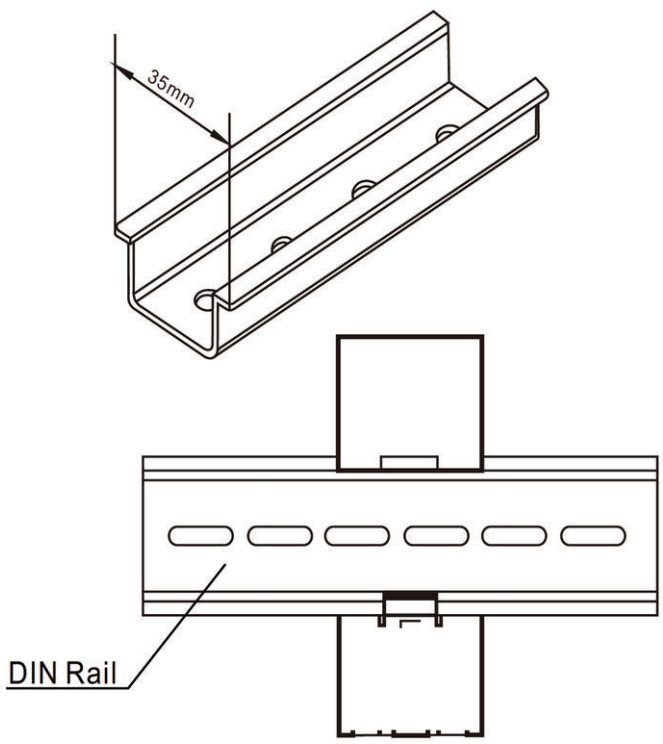

2.9 **Wiring Torque**

Terminals Capacity	COMM / Pulse / 2T	0.5~1.5mm²
	Load	4~25mm²
Screw Torque	COMM / Pulse / 2T	0.4Nm
	Load	2.5Nm-3Nm

2.10 **Mechanics**

- Din rail dimensions — 36x100x63 (WxHxD) Per DIN 43880
- Mounting — DIN rail 35mm
- Ingress protection — IP51 (indoor)
- Material — Self-extinguishing UL94V-0

2.11 **Pulsed output type**

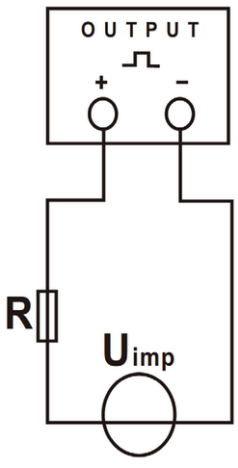

The test pulse output is a polarity dependant, passive transistor output requiring an external voltage source for correct operation. For this external voltage source, the voltage (Ui) should be 5-27V DC, and the maximum input current (Imax) should be 27mA DC. To connect the impulse output, connect 5-27V DC to connector 7 (anode) and the signal wire (s) to connector 6 (cathode). The meter pulse is indicated on the front panel by a red flashing LED

ATTENTION: Pulse output must be fed as shown in the wiring diagram above. Scrupulously respect polarities and the connection mode. Opto-coupler with potential free SPST-NO contact.

Contact range: 5~27V DC Max current input: 27mA DC

EU Type Examination Certificate



SGS

EU Type Examination Certificate Number: **0120/SGS0206**

Zhejiang Eastron Electronic Co.,Ltd.
No. 52, Dongjin Road
Nanhu, Jiaxing
Zhejiang
China

Instrument Identification:
SDM230 Series

Instrument Traceable Number
0120/SGS0206

Single Phase, Active Import/ Export (kWh), Indoor, Electricity Meter

has been assessed and certified as meeting the requirements of

EU Directive 2014/32/EU
on Measuring Instruments Annex II, Module B

It is certified that the manufacturer's technical design and specimen for the above instrument has been examined and, based on the evidence submitted, it is considered that the instrument conforms to the requirements of Annex V of EU Directive 2014/32/EU

This certificate must be used in conjunction with a certificate covering the product verification as required in Annex II, Module D or Annex II, Module F

This certificate is valid until 29th September 2025
Issue 9

Certification is based on report number(s) SHES141200649301 issued 16th April 2015
EMA207767/1 issued 25th August 2015, EMA296595/1 issued 30th November 2021
EMA281302/1, EMA314502/1

Authorised Signature

Mikko Välimäki

SGS Fimko OY, Notified Body 0598
Takomotie 8, FI-00380 Helsinki, Finland
t +358 9 696 f +358 692 574 www.sgs.com

Page 1 of 9

DU-CST-ME-002 Rev 5

EU Type Examination Cert.

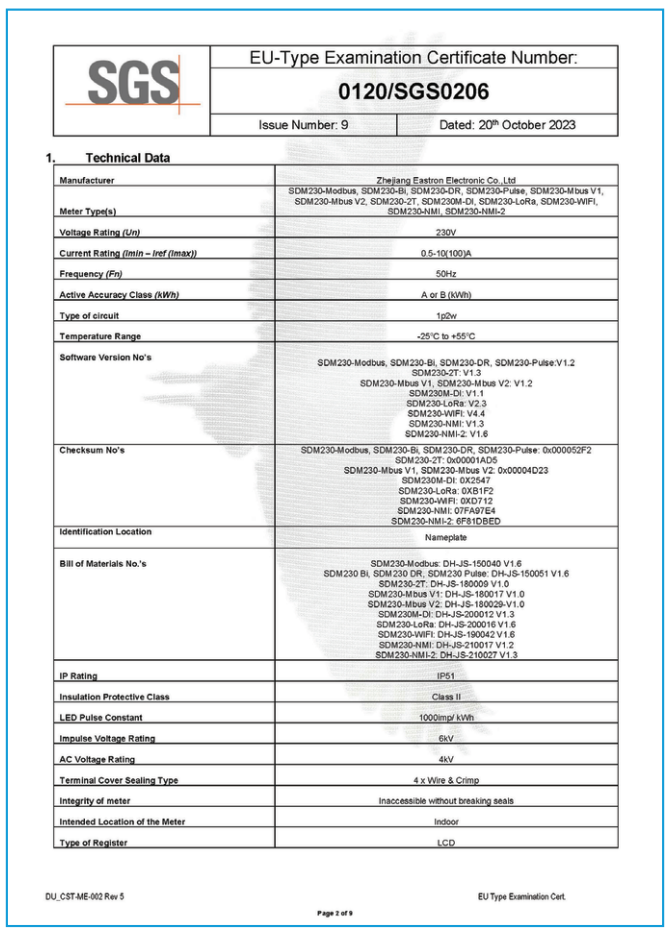

SGS

EU-Type Examination Certificate Number:
0120/SGS0206
Issue Number: 9 | Dated: 20th October 2023

1. Technical Data

Manufacturer	Zhejiang Eastron Electronic Co.,Ltd
Meter Type(s)	SDM230-Modbus, SDM230-Bi, SDM230-DR, SDM230-Pulse, SDM230-Mbus V1, SDM230-Mbus V2, SDM230-2T, SDM230M-DI, SDM230-LoRa, SDM230-WIFI, SDM230-NMI, SDM230-NMI-2
Voltage Rating *(Un)*	230V
Current Rating *(Imin – Iref (Imax))*	0.5-10(100)A
Frequency *(Fn)*	50Hz
Active Accuracy Class *(kWh)*	A or B (kWh)
Type of circuit	1p2w
Temperature Range	-25°C to +55°C
Software Version No's	SDM230-Modbus, SDM230-Bi, SDM230-DR, SDM230-Pulse:V1.2 SDM230-2T: V1.3 SDM230-Mbus V1, SDM230-Mbus V2: V1.2 SDM230M-DI: V1.1 SDM230-LoRa: V2.3 SDM230-WIFI: V4.4 SDM230-NMI: V1.3 SDM230-NMI-2: V1.6
Checksum No's	SDM230-Modbus, SDM230-Bi, SDM230-DR, SDM230-Pulse: 0x000052F2 SDM230-2T: 0x00001AD5 SDM230-Mbus V1, SDM230-Mbus V2: 0x00004D23 SDM230M-DI: 0X2547 SDM230-LoRa: 0XB1F2 SDM230-WIFI: 0XD712 SDM230-NMI: 07FA97E4 SDM230-NMI-2: 6F81DBED
Identification Location	Nameplate
Bill of Materials No.'s	SDM230-Modbus: DH-JS-150040 V1.6 SDM230 Bi, SDM230 DR, SDM230 Pulse: DH-JS-150051 V1.6 SDM230-2T: DH-JS-180009 V1.0 SDM230-Mbus V1: DH-JS-180017 V1.0 SDM230-Mbus V2: DH-JS-180029-V1.0 SDM230M-DI: DH-JS-200012 V1.3 SDM230-LoRa: DH-JS-200016 V1.6 SDM230-WIFI: DH-JS-190042 V1.6 SDM230-NMI: DH-JS-210017 V1.2 SDM230-NMI-2: DH-JS-210027 V1.3
IP Rating	IP51
Insulation Protective Class	Class II
LED Pulse Constant	1000imp/ kWh
Impulse Voltage Rating	6kV
AC Voltage Rating	4kV
Terminal Cover Sealing Type	4 x Wire & Crimp
Integrity of meter	Inaccessible without breaking seals
Intended Location of the Meter	Indoor
Type of Register	LCD

DU_CST-ME-002 Rev 5

EU Type Examination Cert.

Page 2 of 9

Declaration of Conformity
(for the MID approved version meter only)

We Zhejiang Eastron Electronic Co.,Ltd. Declare under our sole responsibility as the manufacturer that the single phase multi-funtion electrical energy meter "SDM230 Series" correspond to the production model described in the EU-type examination certificate and to the requirements of the Directive 2014/32/EU EU type examination certificate number 0120/SGS0206. Identification number of the NB0598



Safety Instruction

The Installation instructions do not include a complete list of all safety measures necessary for operating the device. Special operating conditions may require additional measures. The installation instructions contain notes that must be observed for your personal safety to prevent property damage.

Safety instructions in this document are highlighted with a warning triangle and are presented as follows depending on the level of risk.

The General warning symbol calls attention to possible risks of injury. Observe all the instructions listed under the symbol to prevent injuries or even death

This additional symbol indicates any electrical danger that can result in serious injuries or death

Attention

Warns of an imminently dangerous situation that can result in property damage or environmental damage in the event of non-compliance.

Misrepresentation Act – The details provided in this document are believed to be accurate but cannot be guaranteed. All liability, whether in negligence or otherwise, for any loss arising from the use of these details is hereby excluded.

©2025 Copyright Eastron.

Sifam Tinsley Instrumentation Ltd
1 Warner Drive
Springwood Industrial Estate
Braintree, Essex CM7 2YW

Tel: +44 (0) 1376 335271
Email: sales@sifamtinsley.com
www.sifamtinsley.co.uk