

Illum. push-butt.,flush,yellow

Part no. M22-DL-Y

Article no. 216929

Powering Business Worldwide

Delivery programme

Product range			RMQ-Titan (drilling dimensions 22.5 mm)
Basic function			Illuminated pushbutton actuators
Single unit/Complete unit			Single unit
Design			Flush
Function			momentary
Colour			
Button plate			
Protection type			IP67, IP69K
Front ring			Front ring: titanium
Connection to SmartWire-DT			yes

Approvals

Product Standards	IEC/EN 60947-5; UL 508; CSA-C22.2 No. 14-05; CSA-C22.2 No. 94-91; CE marking
UL File No.	E29184
UL CCN	NKCR
CSA File No.	012528
CSA Class No.	3211-03
NA Certification	UL listed, CSA certified
Degree of Protection	UL/CSA Type 3R, 4X, 12, 13

General

Standards			IEC/EN 60947 VDE 0660
Lifespan, mechanical	Operations	x 10^6	> 5
Operating frequency	Operations/h		≤ 3600
Actuating force		n	≤ 5
Protection type			IP67, IP69K
Climatic proofing			Damp heat, constant to IEC 60068-2-78 Damp heat, cyclic to IEC 60068-2-30
Ambient temperature		°C	
Open		°C	- 25 - + 70
Mounting position			As required
Mechanical shock resistance		g	30 Shock duration 11 ms Sinusoidal according to IEC 60068-2-27

Technical data ETIM 4.0

Lens design			Round
Number of locations			1
Protection type (IP), at front			IP67
Momentary			YES
Color button			yellow
Hole diameter		mm	22
Width of opening		mm	22
Design of button			flush
Color bezel			Chrome
With bezel			YES



Fixing adapter

Part no. M22-A

Article no. 216374

Delivery programme

Product range			RMQ-Titan (drilling dimensions 22.5 mm) SWD RMQ connections
Basic function			Accessories Fixing adapters
Basic function accessories			Mounting adapter
Subrange			Accessories RMQ
Accessories			Fixing adapters
Single unit/Complete unit			Single unit
Function			Mounting clamp (front mounting) for 3-contact LED elements
Fixing			Front fixing
Description			for 1 function element M22-SWD-K… or LED element M22-SWD-LED… in addition 1 or 2 contact elements M22-K.. possible Sequence numbers on fixing adapter
For use with			Contact elements M22-(C)K… LED elements M22-(C)LED…
For use with			M22-SWD-K... M22-SWD-LED...
Configuration			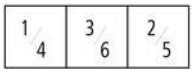
Protection type			IP20
Connection to SmartWire-DT			yes

Approvals

Product Standards	IEC/EN 60947-5; UL 508; CSA-C22.2 No. 14-05; CSA-C22.2 No. 94-91; CE marking
UL File No.	E29184
UL CCN	NKCR
CSA File No.	012528
CSA Class No.	3211-03
NA Certification	UL listed, CSA certified

General

Standards			IEC/EN 60947 VDE 0660
Lifespan, mechanical	Operations	x 10^6	> 5
Operating frequency	Operations/h		≤ 3600
Operating torque (screw terminals)		Nm	≤ 0.8
Protection type			IP20
Climatic proofing			Damp heat, constant to IEC 60068-2-78 Damp heat, cyclic to IEC 60068-2-30
Ambient temperature		°C	
Open		°C	- 25 - + 70
Mounting position			As required
Terminal capacities		mm^2	
Solid		mm^2	0.75 - 2.5
Stranded		mm^2	0.5 - 2.5

Contacts

Rated impulse withstand voltage	U_{imp}	V AC	6000
Rated insulation voltage	U_i	V	500
Overvoltage category/pollution degree			III/3

Control circuit reliability			
at 24 V DC/5 mA	H_F	Fault probability	$< 10^{-7}$, < 1 fault in 10^7 operations
at 5 V DC/1 mA	H_F	Fault probability	$< 5 \times 10^{-6}$, < 1 failure in 5×10^6 operations
Max. short-circuit protective device			
Fuseless		Type	PKZM0-10/FAZ-B6/1
Fuse	gG/gL	A	10

Switching capacity

Rated operational current	I_e	A	
AC-15			
115 V	I_e	A	6
220 V 230 V 240 V	I_e	A	6
380 V 400 V 415 V	I_e	A	4
500 V	I_e	A	2
DC-13			
24 V	I_e	A	3
42 V	I_e	A	1.7
60 V	I_e	A	1.2
110 V	I_e	A	0.8
220 V	I_e	A	0.3
Lifespan, electrical			
AC-15			
230 V/0.5 A	Operations	x 10^6	1.6
230 V/1.0 A	Operations	x 10^6	1
230 V/3.0 A	Operations	x 10^6	0.7
DV-13			
12 V/2.8 A	Operations	x 10^6	1.2
Indoor and protected outdoor installation			

Technical data ETIM 4.0

Mounting diameter		mm	22
Number of installable devices			6

Dimensions

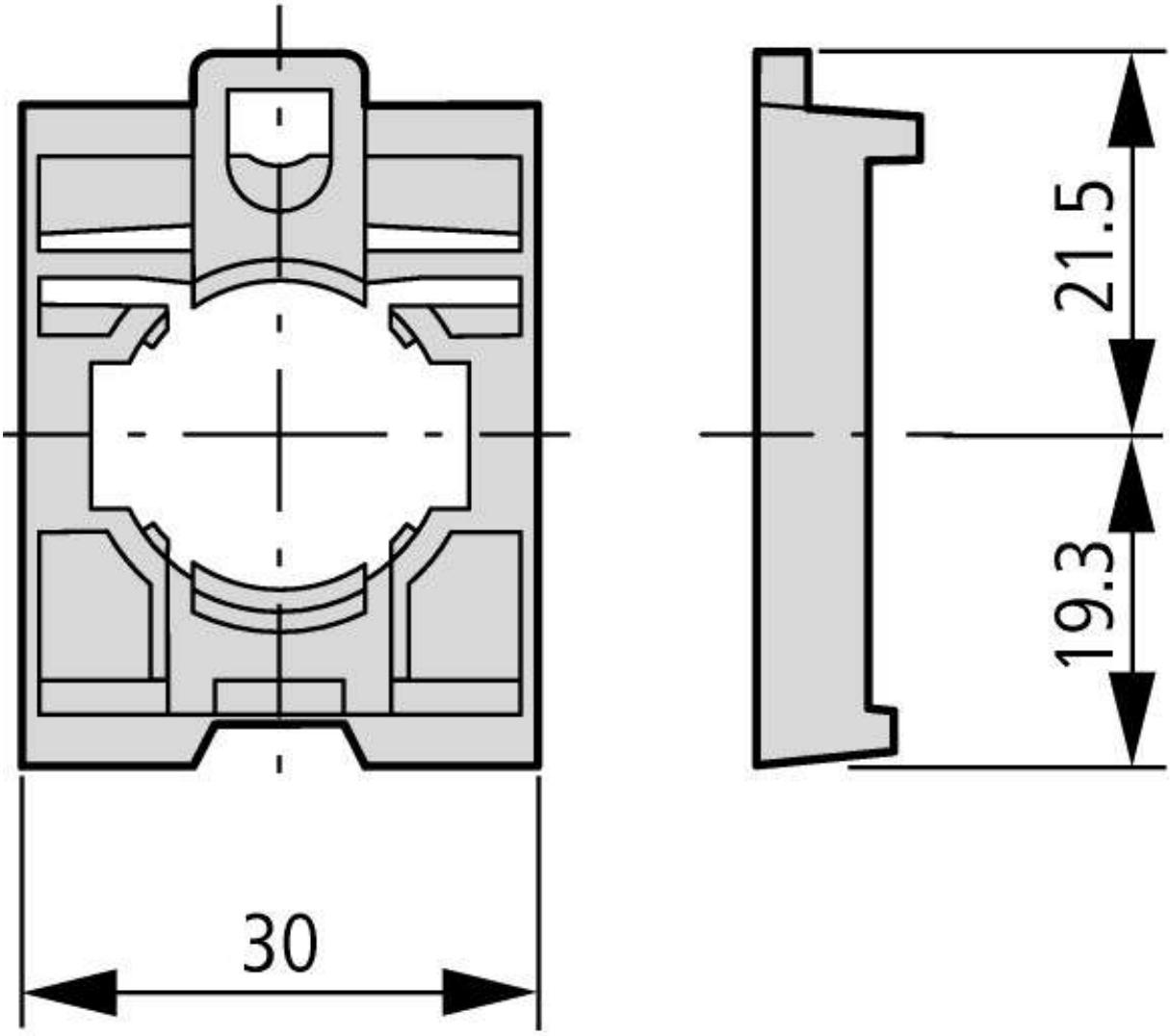

Fixing adapters
Fixing adapter (front mount) for 3-contacts-/LED elements

Additional product information (links)

IL04716004Z (AWA1160-2511) SmartWire-DT: RMQ-Titan	
IL04716004Z (AWA1160-2511) SmartWire-DT: RMQ-Titan	ftp://ftp.moeller.net/DOCUMENTATION/AWA_INSTRUCTIONS/IL04716004Z2010_10.pdf
MN05006002Z-EN (AWB2723-1617) SmartWire-DT, The System	
MN05006002Z-DE (AWB2723-1617) SmartWire-DT, Das System - Deutsch	ftp://ftp.moeller.net/DOCUMENTATION/AWB_MANUALS/MN05006002Z_DE.pdf
MN05006002Z-EN (AWB2723-1617) SmartWire-DT, The System - English	ftp://ftp.moeller.net/DOCUMENTATION/AWB_MANUALS/MN05006002Z_EN.pdf
MN05006002Z-IT (AWB2723-1617) SmartWire-Darwin, Il sistema - italiano	ftp://ftp.moeller.net/DOCUMENTATION/AWB_MANUALS/MN05006002Z_IT.pdf

© 05/2012 by Eaton Industries GmbH



LED element,front,white

Part no. **M22-LED230-W**

Article no. **216563**

Delivery programme

Product range			RMQ-Titan (drilling dimensions 22.5 mm)
Basic function			LED elements
Single unit/Complete unit			Single unit
Fixing			Front fixing
Connection technique			Screw terminals
Rated operational voltage	U_e	V	85 - 264 V AC, 50/60 Hz
Rated operational current	I_e	mA	5 - 15
Power consumption	$P_{max.}$	W	0.33
			At 230 V
Colour			
			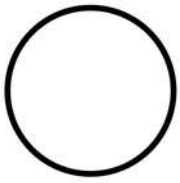
			White
Protection type			IP20
Front ring			- N/A -
Connection to SmartWire-DT			no

Notes

For pushbutton actuators, indicator lights, illuminated pushbutton actuators and illuminated selector switch actuators, the following applies:

M22...-R only in combination with M22-LED...-R

M22...-G only in combination with M22-LED...-G

M22...-W only in combination with M22-LED...-W

M22...-Y only in combination with M22-LED...-W

M22…-B in combination with M22-LED…-W or M22-LED…-B

Approvals

Product Standards	IEC/EN 60947-5; UL 508; CSA-C22.2 No. 14-05; CSA-C22.2 No. 94-91; CE marking
UL File No.	E29184
UL CCN	NKCR
CSA File No.	012528
CSA Class No.	3211-03
NA Certification	UL listed, CSA certified
Degree of Protection	UL/CSA Type: -

General

Standards			IEC/EN 60947 VDE 0660
Operating torque (screw terminals)		Nm	0.8
Protection type			IP20
Climatic proofing			Damp heat, constant to IEC 60068-2-78 Damp heat, cyclic to IEC 60068-2-30
Ambient temperature		°C	
Open		°C	- 25 - + 70

Storage		°C	- 40 - + 80
Mounting position			As required
Mechanical shock resistance		g	30 Shock duration 11 ms Sinusoidal according to IEC 60068-2-27
Terminal capacities		mm^2	
Solid		mm^2	0.75 - 2.5
Stranded		mm^2	0.5 - 2.5

Contacts

Rated impulse withstand voltage	U_{imp}	V AC	6000
Rated insulation voltage	U_i	V	500
Overvoltage category/pollution degree			III/3

Notes

Notes > 200 V AC/60 Hz: -25/+55 °C
Indoor and protected outdoor installation

Technical data ETIM 4.0

With integrated series resistor			No
Type of light element			LED
Lamp holder			without
Mounting type			Front mount
With integrated light element			YES
Voltage type for actuation			AC
With integrated diode			YES
With integrated transformer			No
Rated operating voltage Ue at AC 60 Hz		V	230
Light element			white
Rated operating voltage Ue at AC 50 Hz		V	230
Rated operating voltage Ue at DC		V	0
Connection type auxiliary circuit			Screw connection

Dimensions

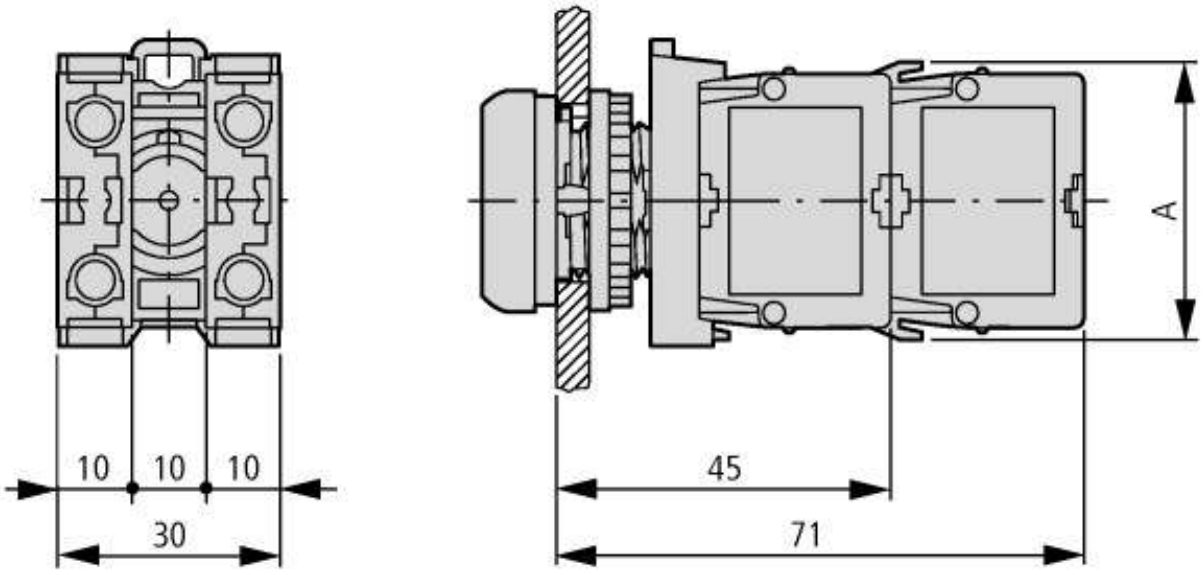

Pushbutton with M22-(C)K…
Pushbutton with M22-(C) LED… + M22-XLED…

Additional product information (links)

IL04716002Z (AWA1160-1745) RMQ-Titan System

IL04716002Z (AWA1160-1745) RMQ-Titan System	ftp://ftp.moeller.net/DOCUMENTATION/AWA_INSTRUCTIONS/IL04716002Z2011_03.pdf

© 05/2012 by Eaton Industries GmbH

Height meter opening		mm	6
Switching function latching			No
Suitable for illumination			YES
Material front ring			Insulated material

Dimensions

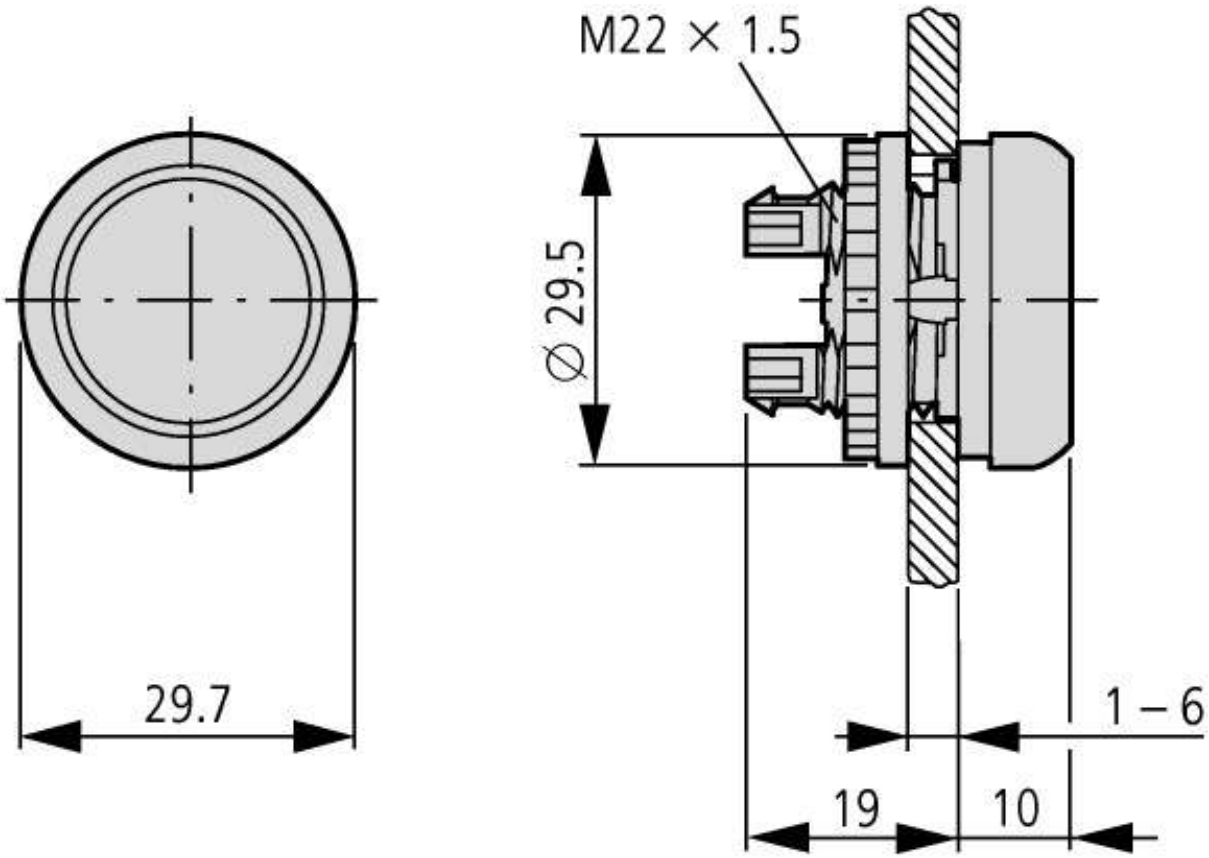

Additional product information (links)

IL04716002Z (AWA1160-1745) RMQ-Titan System	
IL04716002Z (AWA1160-1745) RMQ-Titan System	ftp://ftp.moeller.net/DOCUMENTATION/AWA_INSTRUCTIONS/IL04716002Z2011_03.pdf

© 05/2012 by Eaton Industries GmbH