# 6202-2Z

SKF Explorer

## Dimensions

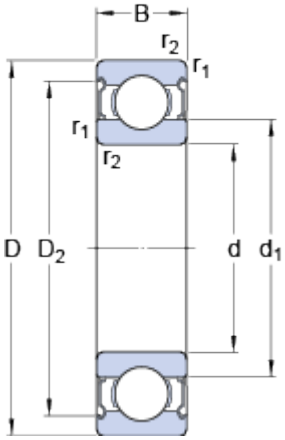


| | | | |
|---|---|---|---|
| d | | 15 | mm |
| D | | 35 | mm |
| B | | 11 | mm |
| $d_1$ | | 21.7 | mm |
| $D_2$ | | 30.35 | mm |
| $r_{1,2}$ | min. | 0.6 | mm |

## Abutment dimensions

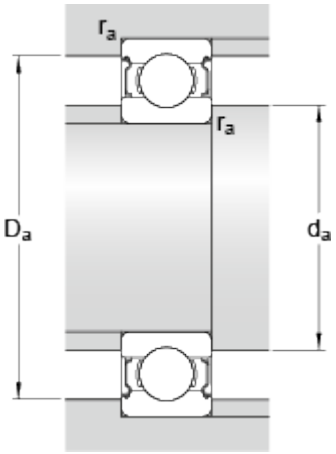


| | | | |
|---|---|---|---|
| $d_a$ | min. | 19.2 | mm |
| $d_a$ | max. | 21.6 | mm |
| $D_a$ | max. | 30.8 | mm |
| $r_a$ | max. | 0.6 | mm |

## Calculation data

| | | | |
|---|---|---|---|
| Basic dynamic load rating | C | 8.1 | kN |
| Basic static load rating | $C_0$ | 3.8 | kN |
| Fatigue load limit | $P_u$ | 0.16 | kN |
| Reference speed | | 43000 | r/min |
| Limiting speed | | 22000 | r/min |
| Calculation factor | $k_r$ | 0.025 | |
| Calculation factor | $f_0$ | 13 | |

## Mass

| | | |
|---|---|---|
| Mass bearing | 0.048 | kg |