

Power Bus

Features

- Bus carrier with bus PCB for 35 mm DIN mounting rail, height 7.5 mm
- Provides DC supply voltage and the bus connection to all equipped SC-System modules
- Standard length 250 mm (9.84 inch), simple to customize to application space
- Eliminates daisy-chains

Accessories

POWERBUS-CAP

End cap

POWERBUS-COV.250

Cover for DIN Mounting Rail

Technical data

Electrical specifications		
Rated voltage	U_N	24 V DC
Rated current	I_N	3 A
Ambient conditions		
Ambient temperature		-25 ... 70 °C (-13 ... 158 °F)
Mechanical specifications		
Dimensions		6 x 40 x 250 mm (0.24 x 1.57 x 9.84 inch)
Mounting		in 35 mm DIN mounting rail acc. to EN 60715:2001
Accessories		
Designation		- cover for DIN mounting rail POWERBUS-COV.250 - end cap POWERBUS-CAP - 35 mm DIN mounting rail acc. to EN 60715

Assembly

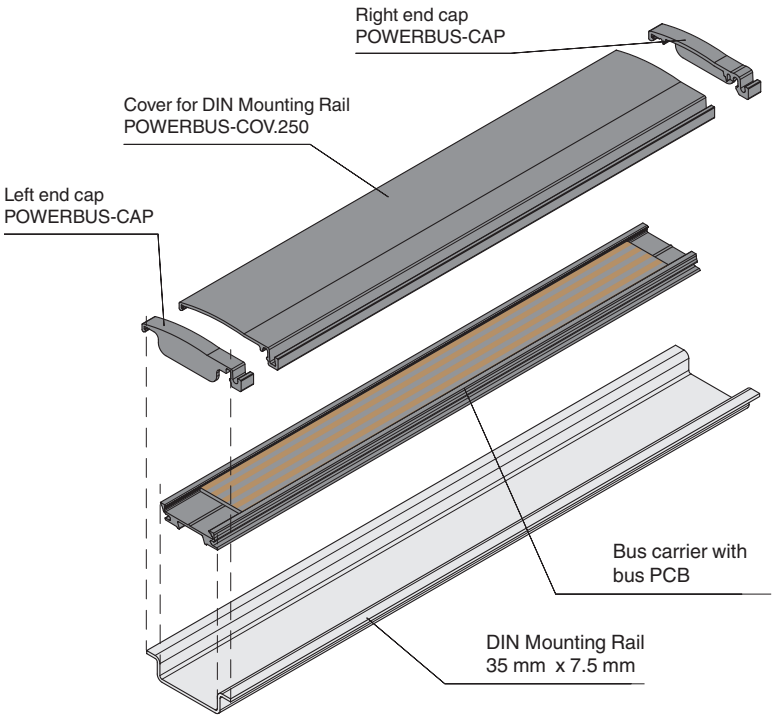

Function

The power bus consists of a bus carrier with bus PCB. In addition, two end caps are attached to the power bus.

The component has conductors for power and for bus connections.

The component reduces wiring and maintenance costs because it eliminates the need to daisy-chain the wires. It also simplifies expansion – just snap in a new isolator when you're ready to expand a system.

The component comes in 250 mm (10 inch) segments but can be cut to any size.

Cover empty, open segments of the power bus. Use the supplied cover for DIN mounting rail (optional accessory). Thereby power bus will be protected from pollution. The contact with electrically conductive parts on power bus will be prevented.

Release date 2016-11-07 13:32 Date of issue 2016-11-07 278481_eng.xml