

FUSERBLOC

Front/side-control fuse combination switches
for industrial fuses up to 1250 A



FUSERBLOC
from 630 to 1250 A



FUSERBLOC
from 50 to 400 A



FUSERBLOC
from 25 to 32 A

Function

The **front/right-side FUSERBLOC** is a manually operated multi-pole fuse load break switch.
They make and break on load and provide safety isolation and protection against overcurrent for any low voltage electrical circuit.
This range includes both direct and external-control models, with 2, 3 and 4 poles and from 25 to 1250 A.

Advantages

Improved safety
- Complete isolation of the fuse with double breaking per pole (top and bottom of fuse).
- Positive break indication

High breaking capacity
Protection against overloads and short-circuits thanks to high breaking capacity fuses (100 kA rms).

Multi-use
A single device can be operated with a handle, either mounted directly on the unit itself or externally, on the door or on the side of an electrical enclosure or cabinet.

Specific functionalities for simplified use
- TEST position for front/side-control devices up to 400 A allows control circuits to be tested without switching power, thanks to the use of U-type auxiliary contacts. In the TEST position, the cabinet door can be opened.
- Mechanical or electronic fuse blown detection system (see DDMM or FMD).

Customised solutions

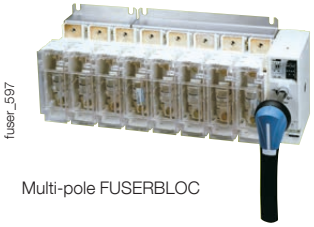

Multi-pole FUSERBLOC



Centred operation

The solution for
- Motor feeders
- Protection of industrial cabinets



Strong points
- Improved safety
- High breaking capacity
- Multi-use
- Specific functionalities for simplified use

Extended range
- Centred or left side operation, rear connections, plug-in connections. Contact us

Compliance with standards
- IEC 60947-3
- EN 60947-3
- BS EN 60947-3
- NBN EN 60947-3
- IEC 60269-1
- DIN EN 60269-1
- NF EN 60269-1
- IEC 60269-2
- GB/T14048.3
- VDE 0636-1
- VDE 0660-107
- UL standards: see FUSERBLOC UL

Approvals and certifications(1)

(1) *Product references on request.*

What you need to know

- In addition to the FUSERBLOC rating, product selection also depends on the fuse characteristics and functional specifications, which need to be in accordance with the application. SOCOMEC FUSERBLOC devices are equipped with **NFC/DIN fuses** (for BS fuses, please contact us)

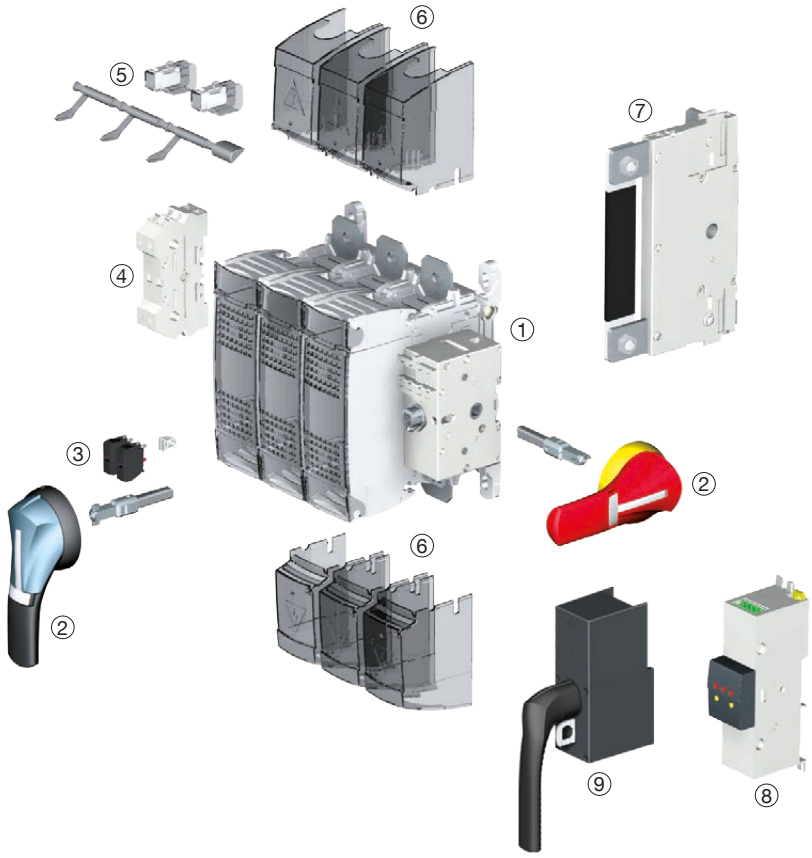

1. FUSERBLOC fuse combination switch
2. Handle for external front and side control
3. U-type auxiliary contacts (pre-break and position signalling)
4. Auxiliary power contacts (position signalling)
5. Mechanical fuse melting detection device (DDMM)
6. Upstream and downstream terminal shrouds
7. Integrated solid neutral link
8. Electronic fuse melting detection (FMD) makes it possible to have an automatic supervision or management system. Compatible with BS88, DIN and UL fuses
   - Visual LED signalling
   - Bi-stable relay for automation devices: alarm, tripping, etc.
   - TEST button: test the device is working properly at any time
   - Mounting plate or DIN rail, on door or directly on the FUSERBLOC
9. Direct control box.

- Whether it is 3-pole + switched neutral or 3-pole + solid neutral, the 25 to 32 A **FUSERBLOC** with **direct** and **external** control is the best compact solution.

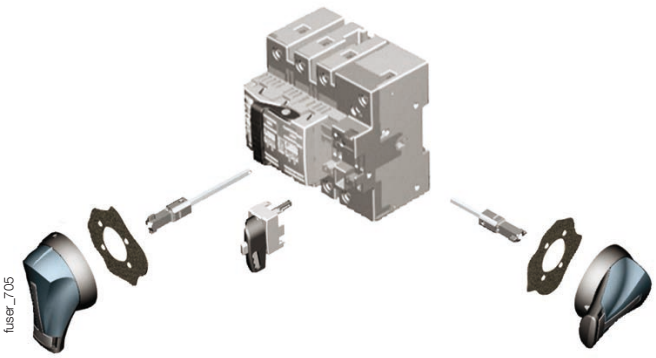
fuser_705

- For ratings 25 to 400 A, the **flat mounting kit** provides a compact solution ideally suited to plug-in units.
- Maintaining outputs from the DC common bus.

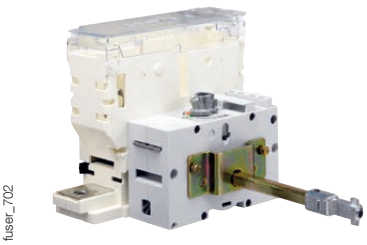
fuser_702

References

NFC and DIN – front/right-side operation – 25 to 125 A

Rating (A) / Fuse size / Casing size	No. of poles	Switch body	Direct front handle I-0-TEST	External front handle I - 0	TEST external front handle I - 0 - TEST	External right-side handle I - 0	Shaft for handle	Auxiliary contact	Terminal shrouds	Electronic fuse blown indication[5]
CD 25 A / 10 x 38 / 0	3 P	3631 **3002**[1]	3629 **4012**	Type S1 Black IP55 1411 **2111**[2] Black IP65 1413 **2111** Red/Yellow IP65 1414 **2111**	Type S1 Black IP65 1413 **2115** Red IP65 1414 **2115**	Type S1 Black IP55 1415 **2111**[2] Black IP65 1417 **2111** Red/Yellow IP65 1418 **2111**	200 mm 1401 **0520** 320 mm 1401 **0532**[2]	Type U 1 contact NC 3999 **0701**[3] 1 contact NO 3999 **0702**[3]		
	3 P + switched neutral	3631 **4002**[1]								
	3 P+ solid neutral	3631 **5002**[1]								
CD 32 A / 10 x 38 / 0	3 P	3631 **3003**								
	3 P + switched neutral	3631 **4003**								
	3 P+ solid neutral	3631 **5003**								
CD 32 A / 14 x 51 / 0	3 P	3631 **3004**[1]								
	3 P + switched neutral	3631 **4004**[1]								
	3 P+ solid neutral	3631 **5004**[1]								
50 A / 14 x 51 / 11	2 P	3831 **2005**	3999 **5020**				200 mm 1400 **1020** 320 mm 1400 **1032**[2] 500 mm 1400 **1050**			
	3 P	3831 **3005**[1]								
	4 P	3831 **6005**[1]								
63 A / 00C / 12	2 P	3831 **2006**								3 LEDs 155…260 VAC 3899 **3120** 3 LEDs 380 - 690 VAC 3899 **3380**
	3 P	3831 **3006**[1]								
	4 P	3831 **6006**[1]								
100 A / 22 x 58 / 13	2 P	3831 **2010**		S2 type Black IP55 1421 **2111**[2] Black IP65 1423 **2111** Red IP65 1424 **2111**	S2 type Black IP65 1423 **2115** Red IP65 1424 **2115**	S2 type Black IP55 1425 **2111**[2] Black IP65 1427 **2111** Red IP65 1428 **2111**			2 P 3998 **2016**[4] 3 P 3998 **3016**[4] 4 P 3998 **4016**[4]	
	3 P	3831 **3010**[1]								
	4 P	3831 **6010**[1]								
125 A / 22 x 58 / 13	2 P	3831 **2011**								
	3 P	3831 **3011**								
	4 P	3831 **6011**								
125 A / 00 / 13	2 P	3831 **2012**								3 LEDs 155…260 VAC 3899 **3120** 3 LEDs 380…690 VAC 3899 **3380**
	3 P	3831 **3012**								
	4 P	3831 **6012**								

(1) Available enclosed (see "Enclosed fuse switches").
(2) Standard.
(3) Maximum 4 contacts.
(4) Top or bottom. Provide 2 terminal shrouds for complete upstream and downstream protection.
(5) Mechanical fuse blown auxiliary contact (DDMM), see "Accessories".

NFC and DIN – front/right-side operation – 160 to 1250 A

Rating (A) / Fuse / Casing size	No. of poles	Switch body	Direct front handle I-0-TEST	External front handle I - 0	External front TEST handle I - 0 - Test	External right side handle I - 0	Shaft for handle	Auxiliary contact	Terminal shrouds	Electronic fuse blown indication[6]
160 A / 00 / 13	2 P	3831 **2015**	3999 **5020**	S2 type Black IP55 1421 **2111**[2] Black IP65 1423 **2111** Red IP65 1424 **2111**	S2 type Black IP65 1423 **2115** Red IP65 1424 **2115**	S2 type Black IP55 1425 **2111**[2] Black IP65 1427 **2111** Red IP65 1428 **2111**	200 mm 1400 **1020** 320 mm 1400 **1032** 500 mm 1400 **1050**	Type U 1 contact NC 3999 **0701**[3] 1 contact NO 3999 **0702**[3]	2 P 3998 **2016**[5] 3 P 3998 **3016**[5] 4 P 3998 **4016**[5]	3 LEDs 155…260 VAC 3899 **3120** 3 LEDs 380…690 VAC 3899 **3380**
	3 P	3831 **3015**								
	4 P	3831 **6015**								
160 A / 0 / 14	2 P	3831 **2016**								
	3 P	3831 **3016**[1]								
	4 P	3831 **6016**[1]								
250 A / 1 / 15	2 P	3831 **2024**	3999 **5021**					Type U 1 contact NC 3999 **0701**[4] 1 contact NO 3999 **0702**[4]	2 P 3998 **2025**[5] 3 P 3998 **3025**[5] 4 P 3998 **4025**[5]	
	3 P	3831 **3024**[1]								
	4 P	3831 **6024**[1]								
400 A / 2 / 16	2 P	3831 **2038**							2 P 3898 **2040** 3 P 3898 **3040** 4 P 3898 **4040**	
	3 P	3831 **3038**[1]								
	4 P	3831 **6038**[1]								
630 A / 3 / 17	2 P	3811 **2063**	3899 **6011**	Type S3 Black IP65 1433 **3111**[2] Red IP65 1434 **3111**		Type S3 Black IP65 1437 **7911**	200 mm 1400 **1220** 320 mm 1400 **1232** 500 mm 1400 **1250**		2 P 3898 **2080**[5] 3 P 3898 **3080**[5] 4 P 3898 **4080**[5]	
	3 P	3811 **3063**[1]								
	4 P	3811 **6063**[1]								
800 A / 3 / 17	2 P	3811 **2080**								
	3 P	3811 **3080**								
	4 P	3811 **6080**								
800 A / 4 / 18	2 P	3811 **2081**	1141 **3011**	Type S4 Black IP65 1443 **3111**[2] Red IP65 1444 **3111**					2 P 3898 **2120**[5] 3 P 3898 **3120**[5] 4 P 3898 **4120**[5]	
	3 P	3811 **3081**								
	4 P	3811 **6081**								
1250 A / 4 / 18	2 P	3811 **2120**								
	3 P	3811 **3120**								
	4 P	3811 **6120**								

(1) Available enclosed (see "Enclosed fuse switches").
(2) Standard.
(3) Maximum 4 contacts.
(4) Maximum 8 contacts.
(5) Top or bottom. Provide 2 terminal shrouds for complete upstream and downstream protection.
(6) Mechanical fuse blown auxiliary contact (DDMM), see "Accessories".

Accessories

Frame front handle can be locked in position 0 for direct control

Rating (A)	Frame size	Command	Handle colour	References
50 - 160	11-12-13-14	I-0-TEST	Black	3999 **5020**
250 - 400	15-16	I-0-TEST	Black	3999 **5021**



Direct front-operation handle

Front operation Rating (A)	Frame size	Figure N°	Handle colour	References
20 - 32	0	1	Black	3629 **4012**
20 - 32	0	1	Red	3629 **4013**
630 - 800	17	2	Black	3899 **6011**
800 - 1250	18	3	Black	1141 **3011**



Fig. 1



Fig. 2



Fig. 3

Handle locks in position 0 for external control

Padlockable handle in position 0 Rating (A)	Frame size	Handle type	Handle colour	Command	External IP[1]	Defeatable handle	Reference
CD 25 … 63	0/11/12	S1	Black	I - 0	IP55	Yes	1411 **2111**
CD 25 … 63	0/11/12	S1	Black	I - 0	IP65	Yes	1413 **2111**
CD 25 … 63	0/11/12	S1	Red/Yellow	I - 0	IP65	Yes	1414 **2111**
CD 25 … 63	0/11/12	S1	Black	I - 0 - Test	IP65	Yes	1413 **2115**
CD 25 … 63	0/11/12	S1	Red/Yellow	I - 0 - Test	IP65	Yes	1414 **2115**
100 - 400	13 … 16	S2	Black	I - 0	IP55	Yes	1421 **2111**
100 - 400	13 … 16	S2	Black	I - 0	IP65	Yes	1423 **2111**
100 - 400	13 … 16	S2	Red/Yellow	I - 0	IP65	Yes	1424 **2111**
100 - 400	13 … 16	S2	Black	I - 0 - Test	IP55	Yes	1423 **2115**
100 - 400	13 … 16	S2	Red/Yellow	I - 0 - Test	IP65	Yes	1424 **2115**
630 … 800	17	S3	Black	I - 0	IP65	Yes	1433 **3111**
630 … 800	17	S3	Red/Yellow	I - 0	IP65	Yes	1434 **3111**
800 … 1250	18	S4	Black	I - 0	IP65	Yes	1443 **3111**
800 … 1250	18	S4	Red/Yellow	I - 0	IP65	Yes	1444 **3111**

(1) IP: protection index according to IEC 60529.



Handle type S1



Handle type S2



Handle type S3



Handle type S4

Padlockable handle in position 1-0 for external control

Padlockable handle in position 0 and I Rating (A)	Frame size	Handle type	Handle colour	External IP[1]	Reference
CD 25 … 63	0/11/12	S1	Black	IP65	1413 **2311**
100 - 400	13 … 16	S2	Black	IP65	1423 **2311**

(1) IP: protection index according to IEC 60529.



Handle type S1



Padlockable metal handle in position 1-0 for external front control

Rating (A)	Frame size	Handle type	Handle colour	External IP(1)	Defeatable handle	Reference
CD 25 … 63	0/11/12	S1	Black	IP65	Yes	141D **2911**
CD 25 … 63	0/11/12	S1	Red/Yellow	IP65	Yes	141E **2911**
100 - 400	13 … 16	S2	Black	IP65	Yes	142D **2911**
100 - 400	13 … 16	S2	Red/Yellow	IP65	Yes	142E **2911**
600 …800	17	S3	Black	IP65	Yes	143D **3911**
600 …800	17	S3	Red/Yellow	IP65	Yes	143E **3911**
800 … 1250	18	S4	Black	IP65	Yes	144D **3911**
800 … 1250	18	S4	Red/Yellow	IP65	Yes	144E **3911**

(1) IP: protection index according to IEC 60529.



Handle type S1



Handle type S3

Handle locks in position 1-0 for external side control

Rating (A)	Frame size	Handle type	Handle colour	External IP(1)	Reference
CD 25 … 63	0/11/12	S1	Black	IP55	1415 **2111**
CD 25 … 63	0/11/12	S1	Black	IP65	1417 **2111**
CD 25 … 63	0/11/12	S1	Red/Yellow	IP65	1418 **2111**
100 - 400	13 … 16	S2	Black	IP55	1425 **2111**
100 - 400	13 … 16	S2	Black	IP65	1427 **2111**
100 - 400	13 … 16	S2	Red/Yellow	IP65	1428 **2111**
630 … 1250	17/18	S3	Black	IP65	1437 **3111**
630 … 1250	17/18	S3	Red/Yellow	IP65	1438 **3111**

(1) IP: protection index according to IEC 60529.



Handle type S1



Handle type S3

Type S handle adapter

Use
Handle extension.

Dimensions
Adds 12 mm to the handle depth.

Handle colour	Available for order in multiples of	External IP(1)	Reference
Black	1	IP65	1493 **0000**

(1) IP: protection index according to IEC 60529.



Alternative colour Type S handle cover

Use
For single lever handle types S1, S2, S3 and double lever handle type S4.
Other colours available - please contact us.

Handle colour	Available for order in multiples of	Handle type	Reference
Light grey	50	S1, S2. S3	1401 **0001**
Dark grey	50	S1, S2. S3	1401 **0011**
Light grey	50	S4	1401 **0031**
Dark grey	50	S4	1401 **0041**



Accessories (continued)

Shaft extensions for external front

Use

Standard lengths:
- 200 mm
- 320 mm
- 400 mm
- 500 mm.

Other lengths available - please contact us.

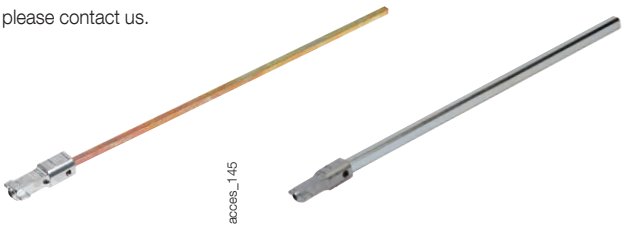

Rating (A)	Frame size	Shaft length (mm)	Reference
CD 25 …CD 32	0	200	1401 **0520**
CD 25 …CD 32	0	320	1401 **0532**
CD 25 …CD 32	0	400	1401 **0540**(1)
50 - 400	11 … 16	200	1400 **1020**
50 - 400	11 … 16	320	1400 **1032**
50 - 400	11 … 16	500	1400 **1050**(2)
630 …800	17	200	1400 **1220**
630 …1250	17/18	320	1400 **1232**
630 … 1250	17/18	500	1400 **1250**(1)

(1) Use the accessory "guide cone for external operation".
(2) Use the accessory "shaft extension support for external front operation".

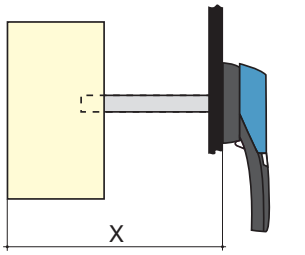

Dimension X (mm) for FUSERBLOC NFC and DIN

Rating (A)	CD 25 …CD 32	50	63	100 … 160	160	250 …400	630 … 800	800 … 1250
Fuse size	10x38/14x51	14x51	00C	22x58/00	0	1/2	3	4
Frame size	0	11	12	13	14	15/16	17	18
Shaft extension length (mm)								
200	102 … 245	100 … 230	125 … 230	135 … 230	145 … 230	160 … 230	270 … 304	
320	102 … 365	100 … 350	125 … 350	135 … 350	145 … 350	160 … 350	270 … 424	304 - 424
400	102 … 445	100 - 430	125 - 430	135 - 430	145 - 430	160 - 430	270 - 504	304 - 504
500		100 … 530	125 … 530	135 … 530	145 … 530	160 … 530	270 … 604	304 - 604

Shaft for external side operation

Use

Standard length, 200 mm.

Rating (A)	Frame size	Handle type	Dimension Y (mm)	Shaft length (mm)	Reference
CD 25 …CD 32	0	S	36 … 159	200	1401 **0520**
50 - 400	11 … 16	S	36 … 172	200	1400 **1020**
630 … 1250	17/18	S	15 … 150	200	1400 **1220**

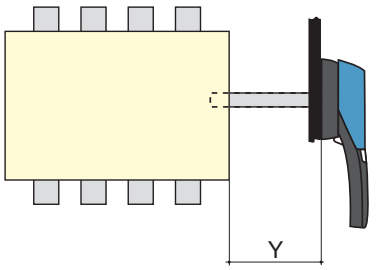

Shaft guide for external operation

Use

For use with S Type handles, to guide the shaft extension into the external handle.
This accessory enables the handle to engage the extension shaft with a misalignment of up to 15 mm.
Required for a shaft length over 320 mm.

Designation	Reference
Shaft guide	1429 **0000**



Key handle interlocking system

Use

Locking in position 0 of the direct, front or right side operation:

- using a padlock (not supplied) in direct right side operation: available as standard on the handle,
- using a padlock (not supplied): right-side or front operation switch from 50 to 1250 A, integrated as standard
- using a lock (not supplied) in external operation.

Locking using RONIS EL 11 AP lock (not supplied)

Rating (A)	Frame size	Command	Figure N°	Reference
CD 25 … 1250	0 … 18	external front	1	1499 **7701**

Locking using Type K CASTELL lock (not supplied)

Rating (A)	Frame size	Command	Figure N°	Reference
CD 25 … 1250	0 … 18	external front	3	1499 **7702**

Locking using Type FS CASTELL lock (not supplied)

Rating (A)	Frame size	Command	Figure N°	Reference
CD 25 … 1250	0 … 18	external front	2	1499 **7703**

Locking using XOP (not supplied)

Rating (A)	Frame size	Command	Reference
CD 25 … 1250	0 18	external front	1499 **7702**

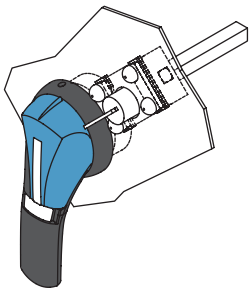
acces_158_a_1_x_cat

Fig. 1

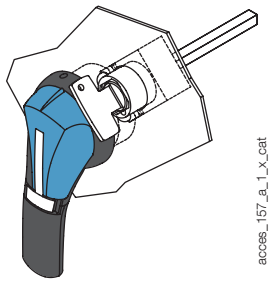
acces_157_a_1_x_cat

Fig. 2

Flat mounting kit

Use

The flat mounting kit is ideally suited to pull-out units.
Kit to be used with a handle for flat mounting.

Rating (A)	Frame size	Type	Reference
CD 25 …CD 32	0	Kit + 200 mm shaft	1429 **7709**
50 - 400	11 … 16	Kit + 200 mm shaft	1429 **7710**

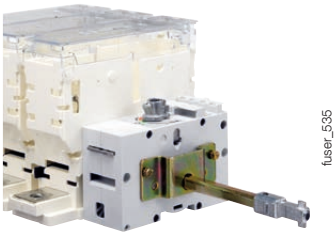
fuser_535

Handle for flat mounting kit

Padlockable handle in position 0

Rating (A)	Frame size	Handle type	Handle colour	External IP(1)	Reference
CD 25 … 63	0/11/12	S1	Black	IP55	1411 **2111**(2)
CD 25 … 63	0/11/12	S1	Red/Yellow	IP65	1414 **2111**(2)
100 - 400	13 … 16	S2	Black	IP55	1421 **2111**(2)
100 - 400	13 … 16	S2	Red/Yellow	IP65	1424 **2111**(2)

(1) IP: protection index according to IEC 60529.
(2) Defeatable handle in position I.


fuser_536

Handle type S2

External front operation shaft support accessory

Use

This support maintains shaft position for extension shafts greater than 320 mm in length.

Rating (A)	Frame size	Reference
50 - 400	11 … 16	3899 **0400**


fuser_698

Accessories (continued)

Integrated solid neutral link

Use
Fixing the solid neutral onto the mechanism produces a device with a solid neutral of the same size as a standard three-pole device (+ 6 mm).

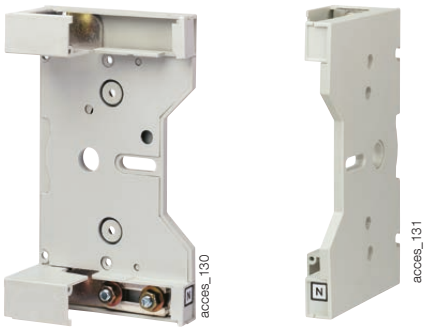

For external front operation			
Rating (A)	**Frame size**	**Bar rating (A)**	**Reference**
100 … 125	13	125	3829 **9310**
160	13	160	3829 **9320**
160	14	200	3829 **9320**
250	15	250	3829 **9325**
400	16	400	3829 **9339**
630 … 800	17	800	3829 **9308**
800 …1250	18	1250	3829 **9312**

Solid neutral module for front control

Rating (A)	Frame size	I_{max}(A)	Distance (mm)	Reference
50	11	50	27	3629 **9227**
63	12	63	32	3629 **9232**
100 … 160	13	160	36	3629 **9236**
160	14	160	50	3629 **9250**
250	15	250	60	3629 **9260**
400	16	400	66	3629 **9265**
630 … 800	17	800	94	3629 **9294**
800 … 1250	18	1250	120	3629 **9212**

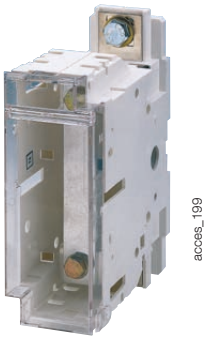

Solid neutral link

NFC and DIN devices				
Rating (A)	**Frame size**	**Fuse size**	**I_{max}(A)**	**Reference**
50	11	14 x 51	50	6029 **0000**
100 … 125	13	22 x 58	125	6039 **0000**
63 … 160	12/13	00C / 00	160	6420 **0000**
160	14	0	160	6421 **0000**
250	15	1	250	6421 **0001**
400	16	2	400	6421 **0002**
630 … 800	17	3	800	6421 **0003**
800 - 1250	18	4	1250	6441 **0005**

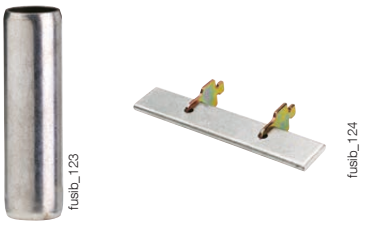

Terminal shrouds

Use
Top or bottom IP20 protection (on the front) against direct contact with terminals or connection parts.

2 sets required to fully shroud both incoming and outgoing terminals.

Rating (A)	Frame size	Position	No. of poles	Reference
CD 25 … 63	0/12	Upstream/downstream	2 / 3 / 4 P	integrated
100 … 160	13/14	Upstream/downstream	2 P	3998 **2016**
100 … 160	13/14	Upstream/downstream	3 P	3998 **3016**
100 … 160	13/14	Upstream/downstream	4 P	3998 **4016**
250 - 400	15	Upstream/downstream	2 P	3998 **2025**
250 - 400	15	Upstream/downstream	3 P	3998 **3025**
250 - 400	15	Upstream/downstream	4 P	3998 **4025**
400	16	Upstream/downstream	2 P	3898 **2040**
400	16	Upstream/downstream	3 P	3898 **3040**
400	16	Upstream/downstream	4 P	3898 **4040**
630 … 800	17	Upstream/downstream	2 P	3898 **2080**
600 … 800	17	Upstream/downstream	3 P	3898 **3080**
600 … 800	17	Upstream/downstream	4 P	3898 **4080**
800 … 1250	18	Upstream/downstream	2 P	3898 **2120**
800 … 1250	18	Upstream/downstream	3 P	3898 **3120**
800 … 1250	18	Upstream/downstream	4 P	3898 **4120**



Type S and Type ST auxiliary contacts

Use
For FUSERBLOCs 50 to 1250 A, position 0 and I signalling by 1 to 4 NO + NC auxiliary contacts.

Electrical principle
The NO + NC Type S auxiliary contacts can be configured as 2 NC or 2 NO.

Connection
By terminals with max. cross-section 10 mm^2.

Mechanical characteristics
30,000 operations.


acces_051

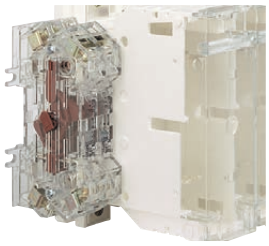
acces_083

References

Type S auxiliary contacts 0-I for external front and right-side operation

Rating (A)	Frame size	Contact type	Auxiliary contact type S Reference	Actuating kit for auxiliary contact (optional) Reference
50 … 1250	11 … 18	NC+NO	3999 **0041** (1)	3999 **0003**

Type ST auxiliary contacts I-0-TEST for external front and right-side operation

Rating (A)	Frame size	Contact type	Description	Auxiliary contact type ST Reference	Actuating kit for auxiliary contact Reference
50 - 400	11 … 16	NC+NO	TEST + ON	3999 **0141**(2)	3999 **0103**
50 - 400	11 … 16	2 O	TEST + ON	3999 **0241**(2)	3999 **0103**

(1) Actuating kit for auxiliary contact type S signalling included.
(2) Actuating kit for auxiliary contact type ST signalling to be ordered in addition.

Characteristics

Rating (A)	Current Nominal (A)	Operating current I_e (A) 250 VAC AC-13	400 VAC AC-13
50 … 1250	20	10	8

Important

> For 400 A rating, casing 16, an adaptation kit reference 3999 000 must be ordered in addition to the auxiliary contact kit.

Type U auxiliary contacts(1)

Use
Compact universal type auxiliaries can be configured to be operated on both standard and TEST position switches. Each housing can accommodate up to 2 interlocked auxiliary contacts.

Connection to the control circuit
By terminals with max. section 2 x 2.5 mm^2
For FUSERBLOC CD 25 to 400 A: pre-break and signalling of positions 0, I and Test
For FUSERBLOC ≥ 630 A: pre-break and signalling of positions 0 and I.

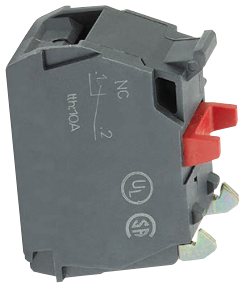

acces_056

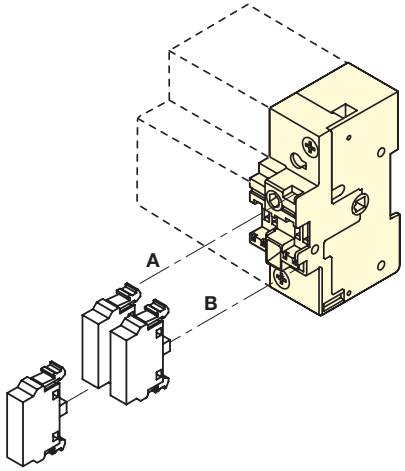

acces_043_a_1_x_cat

References

NC auxiliary contacts

Rating (A)	Frame size	Contact	Reference(1)
CD 25 … 1250	0 … 18	1	3999 **0701** (2)

NO auxiliary contacts

Rating (A)	Frame size	Contact	Reference(1)
CD 25 … 1250	0 … 18	1	3999 **0702** (2)

(1) CD 25 - CD 32: Cannot be mounted in direct operation.
(2) CD 25-160 A - 4 AC Max with no additional holder for auxiliary contact.
250-400 A - 8 AC Max with no additional holder for auxiliary contacts.

Contact holder for additional auxiliary contacts

Rating (A)	Frame size	Contact	Reference
CD 25 …CD 32	0	4 (2 x 2 max)	3999 **0710**
50 - 400	11 … 16	4 (2 x 2 max)	3999 **0600**

Characteristics

Rating (A)	Operating current I_e (A) 250 VAC AC-15	400 VAC AC-15	24 VDC DC-13	48 VDC DC-13
CD 25 … 1250	3	1.8	2.8	1.4

(1) Type U auxiliary contacts cannot be mounted in conjunction with integrated solid neutral.

Accessories (continued)

Electronic fuse blown indication (FMD)

Use
For BS88, DIN and UL fuse cartridge, with or without striker.

Principle
The Fuse Melting Device (FMD) detects fuse blowing using a bistable relay and a signalling LED.
It can be mounted on a DIN rail, a back plate, next to the FUSERBLOC, or on the door.



3-LED version

References

For FUSERBLOC 63 to 1250 A - size 000 to 4 No. of LEDs	Ph/Ph operating voltage	Reference
3	155 - 260 VAC	3899 **3120**
3	380 - 690 VAC	3899 **3380**

Accessories		Reference
Kit to connect accessories	Standard	3819 **9120**
Kit to connect accessories	Door mounted	3829 **9120**

Relay characteristics	Relay operational current I_c (A)	
Rating (A)	AC-15	DC-13
63 - 1250	2.5 A	0.2

Important

> For 400 A rating, casing 16, mounted on the device itself, an adaptation kit reference 3999 0000 must be ordered in addition to the FMD.

DDMM-type auxiliary contact for NFC/DIN-striking fuse device

Use
For fuse cartridge with striker (size 14 x 51; 22 x 58; 0; 1; 2; 3 and 4).

Electrical principle
NO/switched neutral auxiliary contact detects fuse blowing.

Connection to the control circuit
By 6.35 mm fast-on terminal.

Mechanical characteristics
30,000 operations.

References

NO/NC type auxiliary contacts for 2 poles Rating (A)	Frame size	Fusibles(1)	Contact	Reference
50	11	14 x 51	1st	3994 **0405**
100 … 125	13	22 x 58	1st	3994 **0210**
160	14	NH0	1st	3994 **0216**
250	15	NH1-NH2	1st	3994 **0225**
400(1)	16	NH2	1st	3894 **0440**
630 … 800	17	NH3	1st	3894 **1206**
800 … 1250	18	NH4	1st	3894 **1212**

NO/NC type auxiliary contacts for 3 poles Rating (A)	Frame size	Fuses	Contact	Reference
CD 32	0	14 x 51	1st	3994 **0303**
50	11	14 x 51	1st	3994 **0405**
100 … 125	13	22 x 58	1st	3994 **0310**
160	14	NH0 - NH00	1st	3994 **0316**
250	15	NH1-NH2	1st	3994 **0325**
400(1)	16	NH2	1st	3894 **0440**
630 … 800	17	NH3	1st	3894 **1306**
800 … 1250	18	NH4	1st	3894 **1312**
50 … 250	11/13/14/15	14x51 … NH2	2:	3994 **1901**
400	16	NH2	2:	3994 **1902**
630 … 1250	17/18	NH3-NH4	2:	3994 **1901**

NO/NC type auxiliary contacts for 4-pole or 3-pole + neutral Rating (A)	Frame size	Fuses	Contact	Reference
50	11	14 x 51	1st	3994 **0405**
100 … 125	13	22 x 58	1st	3994 **0410**
160	14	NH0	1st	3994 **0416**
250	15	NH1-NH2	1st	3994 **0425**
400(1)	16	NH2	1st	3894 **0440**
630 … 800	17	NH3	1st	3894 **1406**
800 … 1250	18	NH4	1st	3894 **1412**
50 … 250	11/13/14/15	14x51 … NH2	2:	3994 **1901**
400	16	NH2	2:	3994 **1902**
630 … 1250	17/18	NH3-NH4	2:	3994 **1901**

(1) NH00 fuse = size 00. NH4 fuse = size 4.



fuser_311

DDMM for cylindrical fuses


fuser_312

DDMM for NH fuses

Characteristics

Rating (A)	Current Nominal (A)	Operating current I_e (A) 250 VAC AC-13	400 VAC AC-13	24 VDC DC-13	48 VDC DC-13
CD 32 ... 1250	16	4	3	12	2

Cage terminals

Use

Connection of bare copper cables onto the terminals (without lugs).



References

Rating max (A)	Frame size	No. of poles	Reference
CD 25 … 63	0 … 12	2 / 3 / 4 P	integrated
100 … 160	13/14	3 P	5400 **3016**
100 … 160	13/14	4 P	5400 **4016**
250	15	3 P	5400 **3025**
250	15	4 P	5400 **4025**
400	16	3 P	5400 **3040**
400	16	4 P	5400 **4040**

Connections

Rating (A)	Cable section: flexible (mm^2)	Cable section: rigid (mm^2)	Flexible bar width (mm)	Stripped (mm)
100 … 160	16 … 95	16 … 95	13	22
250	16 … 185	16 … 185	18	27
400	50 … 240	50 … 300	20	34

Dimensions

Rating (A)	A	A1	C	R	ØX	X1	Z
100 … 160	47.5	22.5	25	20	8.5	M12	10
250	62	31.5	31.5	25	10.5	M16	14
400	71.5	32	38	32	10.5	M20	15

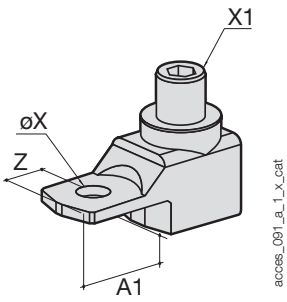

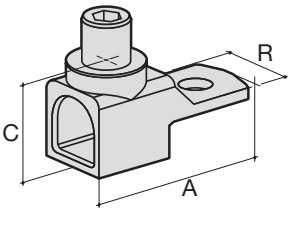

Label

Use

Customisable self-adhesive label allowing identification of the devices.

Dimensions W x H (mm)	To be ordered in multiples of	Reference
18 x 13	50	7769 **9999**



Characteristics according to IEC 60947-3

25 to 125 A

References *"x" corresponds to digit for number of pole (2 = 2 P, 3 = 3 P, 6 = 4 P)*		**3631 x002**	**3631 x003**	**3631 x004**	**3831 x005**	**3831 x006**	**3831 x010**	**3831 x011**	**3831 x012**
Type		**CD 25 A**	**CD 32 A**	**CD 32 A**	**Mod. 50 A**	**Mod. 63 A**	**Mod. 100 A**	**Mod. 125 A**	**Mod. 125 A**
Frame size		0	0	0	11	12	13	13	13
Casing pitch per power pole (mm)		-	-	-	27	32	36	36	36
Number of poles		3, 4(switched neutral), 4(solid neutral)	3, 4(switched neutral), 4(solid neutral)	3, 4(switched neutral), 4(solid neutral)	2, 3, 4	2, 3, 4	2, 3, 4	2, 3, 4	2, 3, 4
Assigned thermal current I_{th} (35 °C)		25 A	32 A	32 A	50 A	63 A	100 A	125 A	125 A
NFC/DIN fuse size		NFC 10 x 38	NFC 10 x 38	NFC 14 x 51	NFC 14 x 51	NH000	NFC 22 x 58	NFC 22 x 58	NH00
Rated operating voltage U_e (V)		690 V	690 V	690 V	690 V	690 V	690 V	690 V	690 V
Rated insulation voltage U_i (V)		800	800	690	800	800	800	800	800
Rated impulse withstand voltage U_{imp} (kV)		8	8	8	8	8	8	8	8
Short-circuit characteristics									
Prospective short-circuit current at U_e 400/415V AC (kA rms)		100	100	100	100	100	100	100	50
Prospective short-circuit current at U_e 660/690V AC (kA rms)		100	100	-	100	100	100	100	50
Rated peak withstand current in I_{cc} U_e 415 V AC (kA peak) (single switch)		5.5	5.5	5.5	5.52	7.3	11.9	13.6	-
Rated peak withstand current in I_{cc} U_e 690 V AC (kA peak) (single switch)		5.2	6.1	-	6.5	7.3	15.8	20.4	10.4
Rated operating current Ie (A)									
Nominal voltage	**Operating category**	**A/B[1]**	**A/B[1]**	**A/B[1]**	**A/B[1]**	**A/B[1]**	**A/B[1]**	**A/B[1]**	**A/B[1]**
415 V AC	AC 21 A / AC 21 B	25/25	32/32	32/32	50/50	63/63	100/100	125/125	125/125
415 V AC	AC 22 A / AC 22 B	25/25	32/32	32/32	50/50	63/63	100/100	125/125	125/125
415 V AC	AC 23 A / AC 23 B	25/25	32/32	32/32	50/50	63/63	100/100	125/125	125/125
500 V AC	AC 21 A / AC 21 B	25/25	32/32	32/32	50/50	63/63	100/100	125/125	125/125
500 V AC	AC 22 A / AC 22 B	25/25	32/32	32/32	50/50	63/63	100/100	125/125	125/125
500 V AC	AC 23 A / AC 23 B	25/25	32/32	32/32	50/50	63/63	100/100	125/125	125/125
690 V AC	AC 20 A / AC 20 B	25/25	32/32	32/32	50/50	63/63	100/100	125/125	125/125
690 V AC	AC 21 A / AC 21 B	25/25	32/32	32/32	50/50	63/63	100/100	100/100	125/125
690 V AC[2]	AC 22 A / AC 22 B	25/25	32/32	32/32	50/50	63/63	100/100	100/100	125/125
690 V AC[2]	AC 23 A / AC 23 B	25/25	32/32	32/32	50/50	63/63	100/100	100/100	125/125
220 V DC	DC 21 A / DC 21 B	-/25	-/32	-/32	-	-/63	100/100	100/100	125/125
220 V DC	DC 22 A / DC 22 B	-/25	-/32	-/32	-	-	100/100	100/100	125/125
220 V DC	DC 23 A / DC 23 B	-/25[3]	-/25[3]	-/25[3]	-	-	100/100	100/100	125/125
440 V DC	DC 21 A / DC 21 B	-	-	-	-	-/63[4]	100[4]/100[4]	100[4]/100[4]	125[4]/125[4]
440 V DC	DC 22 A / DC 22 B	-	-	-	-	-	100[4]/100[4]	100[4]/100[4]	125[4]/125[4]
440 V DC	DC 23 A / DC 23 B	-	-	-	-	-	100[4]/100[4]	100[4]/100[4]	125[4]/125[4]
Rated operating power in AC-23 (kW)									
At U_e 415 VAC without pre-break auxiliary contact [1][5]		11/11	15/15	15/15	25/25	30/30	51/51	63/63	63/63
At U_e 690 VAC without pre-break auxiliary contact [1][5]		22/22	25/25	25/25	45/45	55/55	90/90	90/90	90/90
Reactive power (kvar)									
At U_e 415 VAC [5]		11	15	15	23	28	45	55	55
Power dissipation (W / pole)									
Dissipated power		3.1	4.1	5.9	7.3	8.4	14.5	19.9	20.3
Power dissipated by fuse		2.4	2.9	4.3	4.6	6	9	11	12.5
Power dissipated by switch body		0.7	1.2	1.6	2.45	4.35	6.8	8.63	6
Wiring capacity of conductors									
Minimum Cu cable cross-section (mm^2)		2.5	2.5	2.5	6	10	25	35	35
Minimum Cu cable cross-section (mm^2)		16	16	16	25	25	95	95	95
Maximum busbar width (mm)		-	-	-	-	-	20	20	20
Min. tightening torque (Nm)		2	2	2	3	3	9	9	9
Mechanical characteristics									
Durability (number of operating cycles)		10 000	10 000	10 000	10 000	10 000	10 000	10 000	10 000
Operating torque (Nm)		4.1	4.1	4.1	8.7	8.7	9.7	9.7	10.2
Weight of a 3-pole device without extras (kg)		0.48	0.48	0.50	0.80	1	1.5	1.5	1.5
Weight of a 4-pole device without extras (kg)		0.50	0.50	0.52	1	1.3	2	2	2
Weight of 1 P extra (kg)		-	-	-	0.2	0.3	0.5	0.5	0.5
Storage temperature (°C)		-50 …+85							
Operating temperature (°C)		-20…+70							
Regulatory compliance		IEC 60947-3							
Certification		IEC, KEMA, Loyd's and CCC							
Degree of pollution		3	3	3	3	3	3	3	3

(1) Category with index A = frequent operation / Category with index B = infrequent operation.
(2) With terminal shrouds or phase barrier.
(3) 3-pole device with 2 poles in series for the '+' and 1 pole for the '-'.
(4) 4-pole device with 2 poles in series per polarity.
(5) The power value is given for information only; the current values vary from one manufacturer to another.
(6) For a rated operational voltage Ue = 400 VAC.

160 to 1250 A

References *"x" corresponds to digit for number of pole (2 = 2 P, 3 = 3 P, 6 = 4 P)*		**3831 x015**	**3831 x016**	**3831 x024**	**3831 x038**	**3811 x063**	**3811 x080**	**3811 x081**	**3811 x120**
Type		**Mod. 160 A**	**Mod. 160 A**	**Mod. 250 A**	**Mod. 400 A**	**Mod. 630 A**	**Mod. 800 A**	**Mod. 800 A**	**Mod. 1250 A**
Frame size		13	14	15	16	17	17	18	18
Casing pitch per power pole (mm)		36	50	60	66	94	94	120	120
Number of poles		2, 3, 4	2, 3, 4	2, 3, 4	2, 3, 4	2, 3, 4	2, 3, 4	2, 3, 4	2, 3, 4
Assigned thermal current I_{th} (35 °C)		160 A	160 A	250 A	400 A	630 A	800 A	800 A	1250 A
NFC/DIN fuse size		NH00	NH0	NH1	NH2	NH3	NH3	NH4	NH4
Rated operating voltage U_e (V)		690 V	600 V	690 V	690 V	690 V	690 V	415 V	415 V
Rated insulation voltage U_i (V)		800	800	800	1,000	1,000	1,000	1,000	1,000
Rated impulse withstand voltage U_{imp} (kV)		8	8	8	12	12	12	12	12
Short-circuit characteristics									
Prospective short-circuit current at U_e 400/415V AC (kA rms)		50	100	100	50	100	100	100	100
Prospective short-circuit current at U_e 660/690V AC (kA rms)		50	50	50	50	100	100	-	-
Rated peak withstand current in I_{cc} U_e 415 V AC (kA peak) (single switch)		18.95	22.66	23.9	33.5	48	54.18	50.8	53.2
Rated peak withstand current in I_{cc} U_e 690 V AC (kA peak) (single switch)		13.5	14	29	29.9	58.7	58.7	-	-
Rated operating current Ie (A)									
Nominal voltage	**Operating category**	**A/B[1]**	**A/B[1]**	**A/B[1]**	**A/B[1]**	**A/B[1]**	**A/B[1]**	**A/B[1]**	**A/B[1]**
415 V AC	AC 21 A / AC 21 B	160/160	160/160	250/250	400/400	-/630	-/800	-/800	-/1250
415 V AC	AC 22 A / AC 22 B	160/160	160/160	250/250	400/400	-/630	-/800	-/800	-/1250
415 V AC	AC 23 A / AC 23 B	160/160	160/160	250/250	400/400	-/630	-/800	-/800	-/1250
500 V AC	AC 21 A / AC 21 B	160/160	160/160	250/250	-/400	-/630	-/800	-/800	-/1250
500 V AC	AC 22 A / AC 22 B	160/160	160/160	250/250	-/400	-/630	-/800	-/800	-/1250
500 V AC	AC 23 A / AC 23 B	160/160	160/160	250/250	-	-	-	-	-
690 V AC	AC 20 A / AC 20 B	160/160	160/160	250/250	400/400	630/630	800/800	800/800	1250/1250
690 V AC	AC 21 A / AC 21 B	160/160	160/160	250/250	-/400	-/630	-/800	-/800	-/1250
690 V AC[2]	AC 22 A / AC 22 B	160/160	160/160	250/250	-/400	-/630	-/800 [6]	-/800	-/1250
690 V AC[2]	AC 23 A / AC 23 B	125/125	125/125	250/250	250/315	-	-	-	-
220 V DC	DC 21 A / DC 21 B	160/160	160/160	250/250	-	-	-	-	-
220 V DC	DC 22 A / DC 22 B	160/160	160/160	250/250	-	-	-	-	-
220 V DC	DC 23 A / DC 23 B	125/125	125/125	200/200	-	-	-	-	-
440 V DC	DC 21 A / DC 21 B	160[3]/160[3]	160[3]/160[3]	250[3]/250[3]	-	-	-	-	-
440 V DC	DC 22 A / DC 22 B	160[3]/160[3]	160[3]/160[3]	250[3]/250[3]	-	-	-	-	-
440 V DC	DC 23 A / DC 23 B	125[3]/125[3]	125[3]/125[3]	200[3]/200[3]	-	-	-	-	-
Rated operating power in AC-23 (kW)									
At U_e 415 VAC without pre-break auxiliary contact [1][5]		80/80	80/80	132/132	220/220	355/355	450/450	450/450	560/560
At U_e 690 VAC without pre-break auxiliary contact [1][5]		110/110	110/110	220/220	220/295	295/400	400/400	400/400	400/475
Reactive power (kvar)									
At U_e 415 VAC [5]		75	75	115	185	290	365	355	460
Power dissipation (W / pole)									
Power dissipation		21.6	23	41.1	57.4	122	134		264
Power dissipated by fuse		12	15	23	33	60	65	70	110
Power dissipated by switch body		10.4	10.4	19	24.4	61	68		154
Wiring capacity of conductors									
Minimum Cu cable cross-section (mm^2)		35	50	95	185	2 x 150	2 x 185		
Minimum Cu cable cross-section (mm^2)		95	95	240	240	2 x 300	2 x 300	4 x 185	4 x 185
Maximum busbar width (mm)		20	20	32	45	63	63	80	80
Min. tightening torque (Nm)		9	9	20	20	40	40	40	40
Mechanical characteristics									
Durability (number of operating cycles)		10 000	10 000	10 000	10 000	5 000	8 000	3 000	3 000
Operating torque (Nm)		10.2	9.7	13	17	56	57	62	62
Weight of a 3-pole device without extras (kg)		1.8	1.8	3.2	4.8	16	17	25	25
Weight of a 4-pole device without extras (kg)		2.3	2.3	4.5	6.1	20	21.5	30	30
Weight of 1 P extra (kg)		0.5	0.5	1.3	1.3			3	3
Storage temperature (°C)		-50 …+85							
Operating temperature (°C)		-20…+70							
Regulatory compliance		IEC 60947-3							
Certification		IEC, KEMA, Loyd's and CCC							
Degree of pollution		3	3	3	3	3	3	3	3

(1) Category with index A = frequent operation / Category with index B = infrequent operation.
(2) With terminal shrouds or phase barrier.
(3) 3-pole device with 2 poles in series for the '+' and 1 pole for the '-'.
(4) 4-pole device with 2 poles in series per polarity.
(5) The power value is given for information only; the current values vary from one manufacturer to another.
(6) For a rated operational voltage Ue = 400 VAC.

Dimensions for front/side external operation

25 to 32 A (size 10 x 38)

External front operation

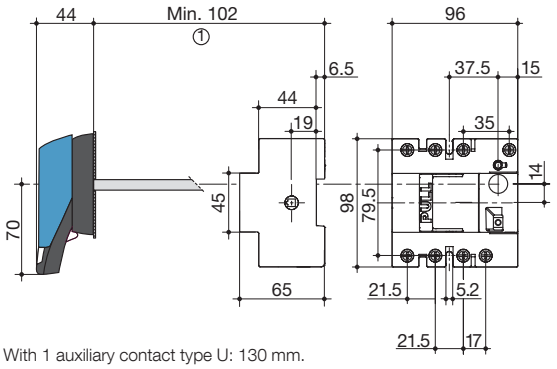

fuser_291_d_1_x_cat

1. With 1 auxiliary contact type U: 130 mm.
With 2 auxiliary contacts type U: 155 mm.

External side operation

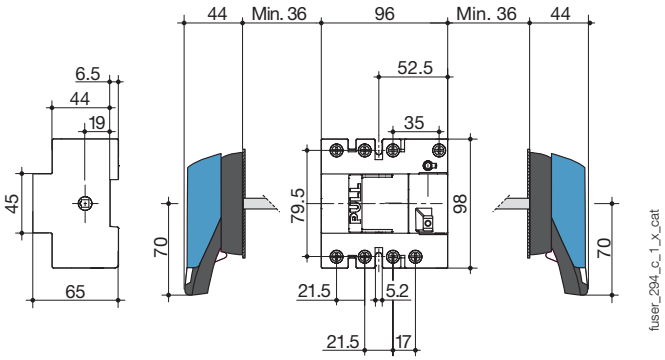

fuser_294_c_1_x_cat

32 A (size 14 x 51)

External front operation

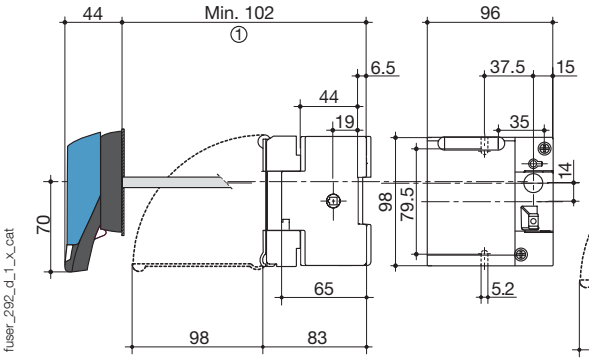

fuser_292_d_1_x_cat

1. With 1 auxiliary contact type U: 130 mm.
With 2 auxiliary contacts type U: 155 mm.

External side operation

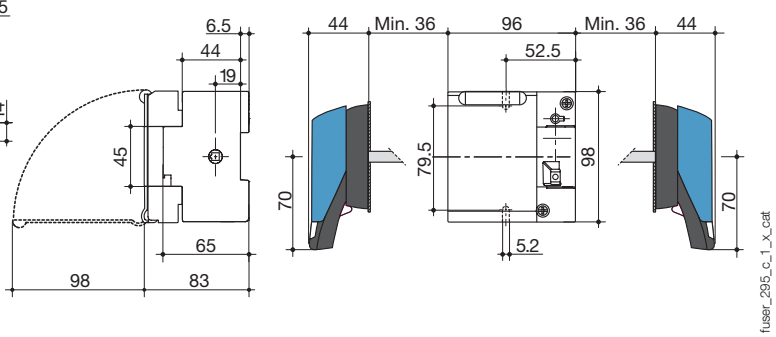

fuser_295_c_1_x_cat

Dimensions - direct operation

25 A (size 10 x 38)

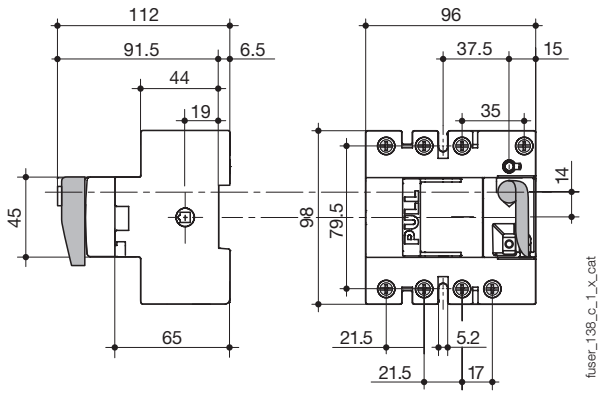

fuser_138_c_1_x_cat

32 A (size 14 x 51)

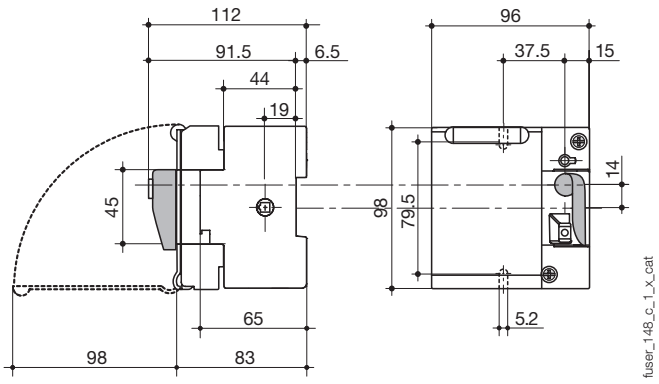

fuser_148_c_1_x_cat

Dimensions for direct front and front/side external operation

50 to 160 A

50 - 63 A: cage connection.
100 - 160 A: cage connection.

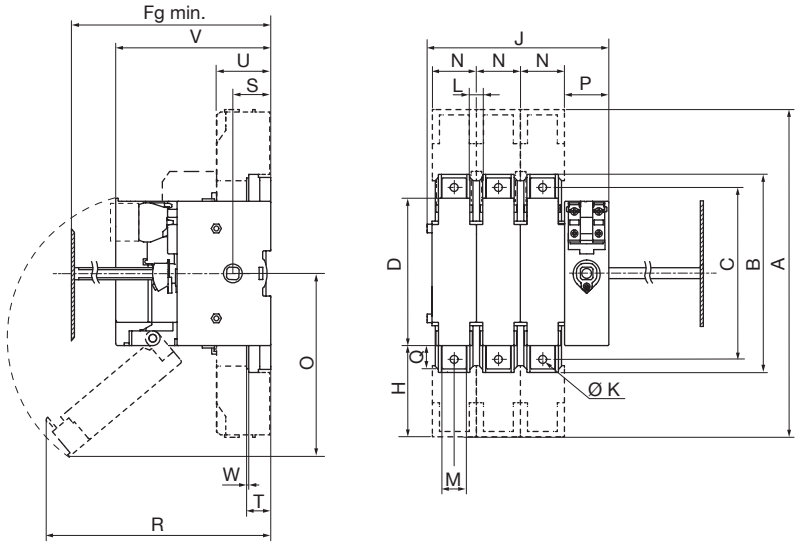

fuser_751_a_1_x_cat.ai

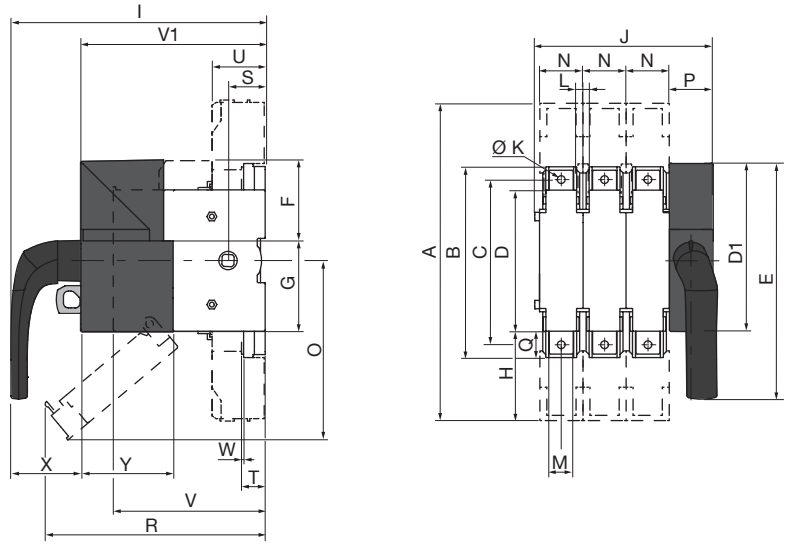

fuser_752_a_1_x_cat.ai

Rating (A)	Fuse size	Frame size	Fg min.	A	B	C	D	D1	E	F	G	H	I	J		K	L	M	N	O	P	Q	R	S	T	U	V	V1	W	X	Y
														3P	4P																
50	14 x 51	11	100		118		106	143	200	67.5	75.5		212.1	121	148	6.2	15	12	27	85	36.8	15	153	31			87	153.6	2	58.5	77
63	00C	12	125		118		106	143	200	67.5	75.5		212.1	136	168	6.2	20	12	32	159	36.8	15	145	31			116	153.6	2	58.5	77
100	22x58	13	135	268	162	141	127	143	200	67.5	75.5	75	212.1	148	184	8.5	16	20	36	141	36.8	41	187	31	19.5	43.5	116	153.6	2.5	58.5	77
125	22x58	13	135	268	162	141	127	143	200	67.5	75.5	75	212.1	148	184	8.5	16	20	36	141	36.8	41	179	31	19.5	43.6	116	153.6	2.5	58.5	77
125	NH00	13	135	268	162	141	127	143	200	67.5	75.5	75	212.1	148	184	8.5	16	20	36	141	36.8	41	193	31	19.5	43.7	126	153.6	2.5	58.5	77
160	NH00	13	135	268	162	141	127	143	200	67.5	75.5	75	212.1	148	184	8.5	16	20	36	141	36.8	41	193	31	19.5	43.8	126	153.6	2.5	58.5	77
160	NH0	14	145	268	162	141	140	143	200	67.5	75.5	75	212.1	190	240	8.5	20	20	50	174	36.8	41	229	31	19.5	43.9	136	153.6	2.5	58.5	77

Dimensions for direct front and front/side external operation (continued)

250 A

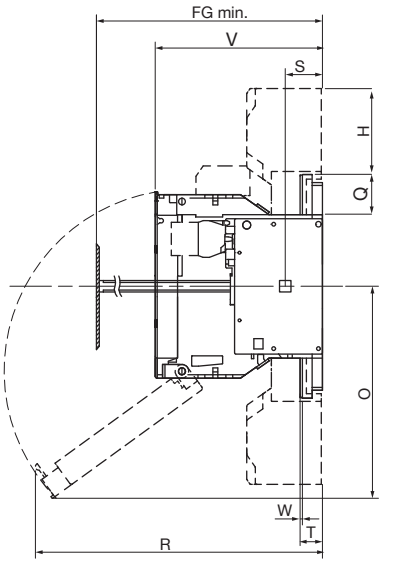

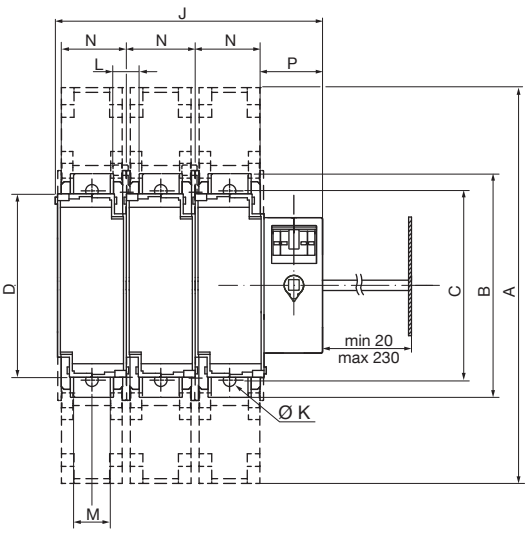

fuser_748_a_1_x_cat.ai

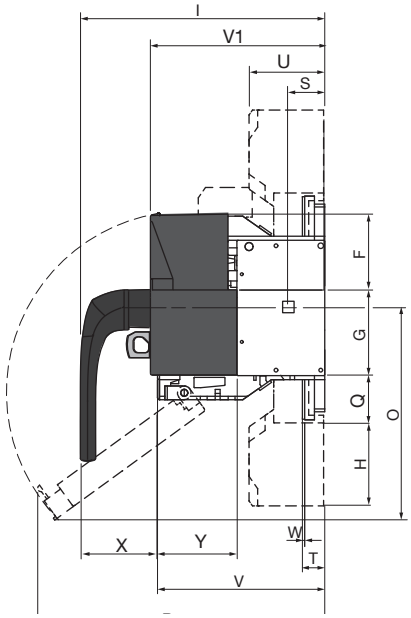

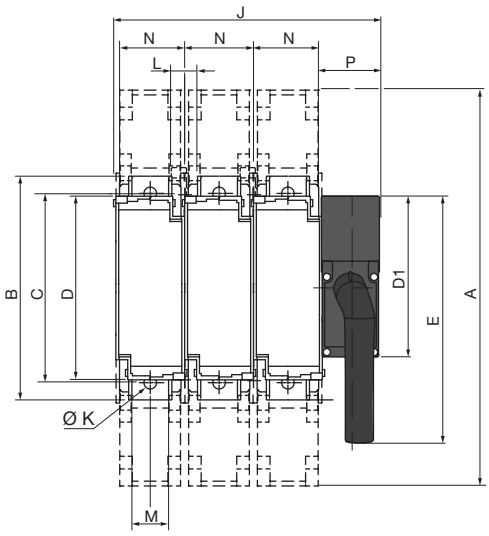

fuser_749_a_1_x_cat.ai

Rating (A)	Fuse size	Frame size	Fg min.	A	B	C	D	D1	E	F	G	H	I	J		K	L	M	N	O	P	Q	R	S	T	U	V	V1	W	X	Y
														3P	4P																
250	NH1	15	154	345	195	166	162	143	220	67.5	75.5	110	212.1	234	294	8.5	28	32	60	185	51.6	52	251	31	19.5	65	146	142	2.5	58.5	77

400 A

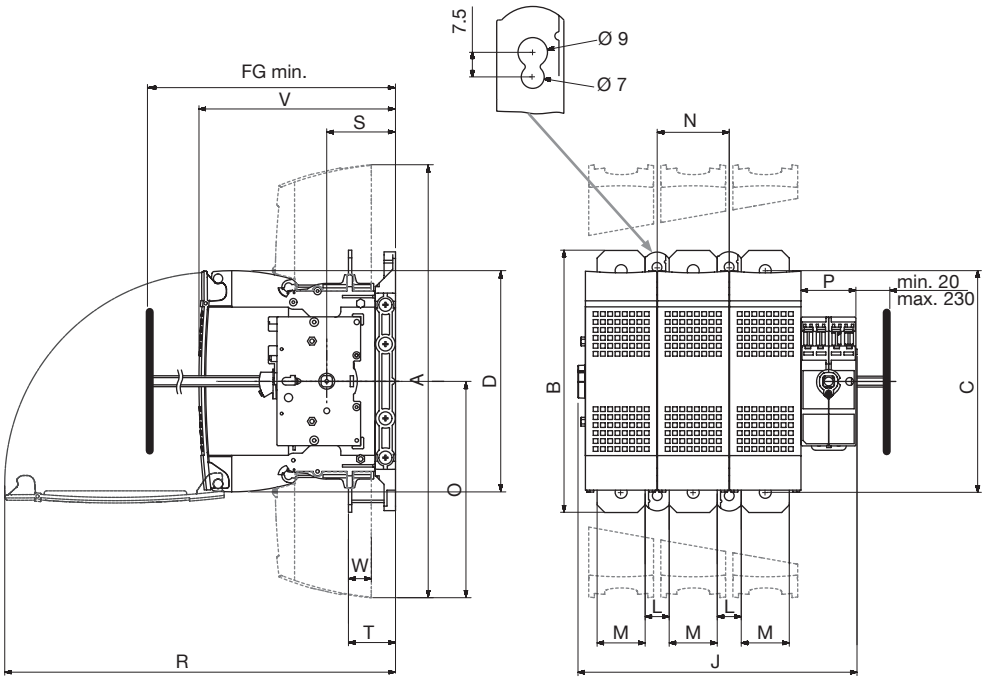

fuser_733_c_1_x_cat.ai

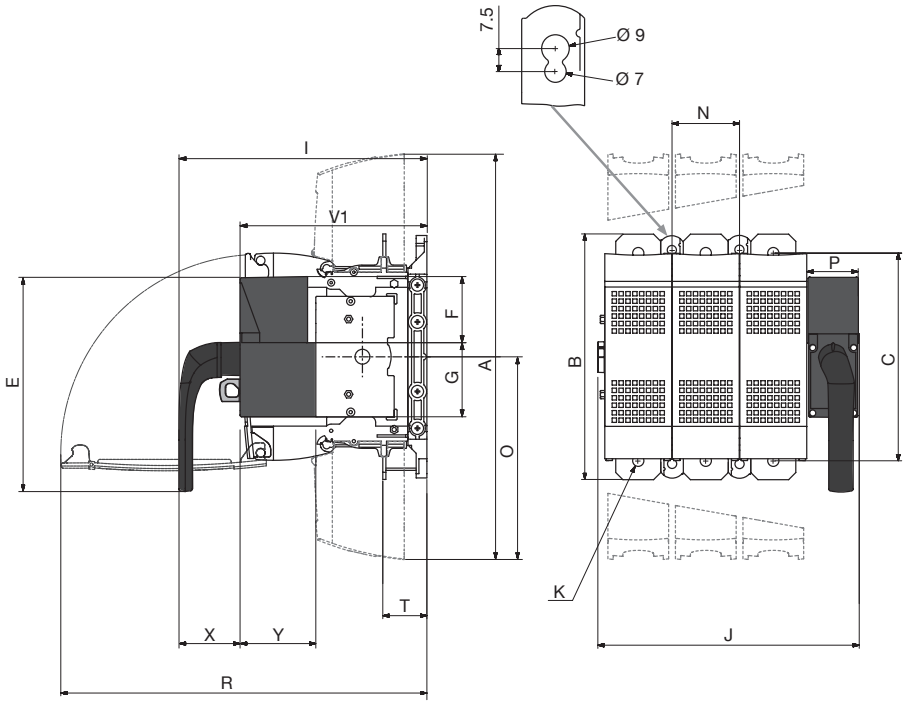

fuser_750_a_1_x_cat.ai

Rating (A)	Fuse size	Frame size	Fg min.	A	B	C	D	D1	E	F	G	I	J		K	L	M	N	O	P	R	S	T	V	V1	W	X	Y
													3P	4P														
400	NH2	16	188	397	240	203	203	143	220	67.5	75.5	239	256	321	11	34	32	66	199	50	360	63	43	180	184	3	58.5	77

Dimensions for direct and external operation

630 to 1250 A

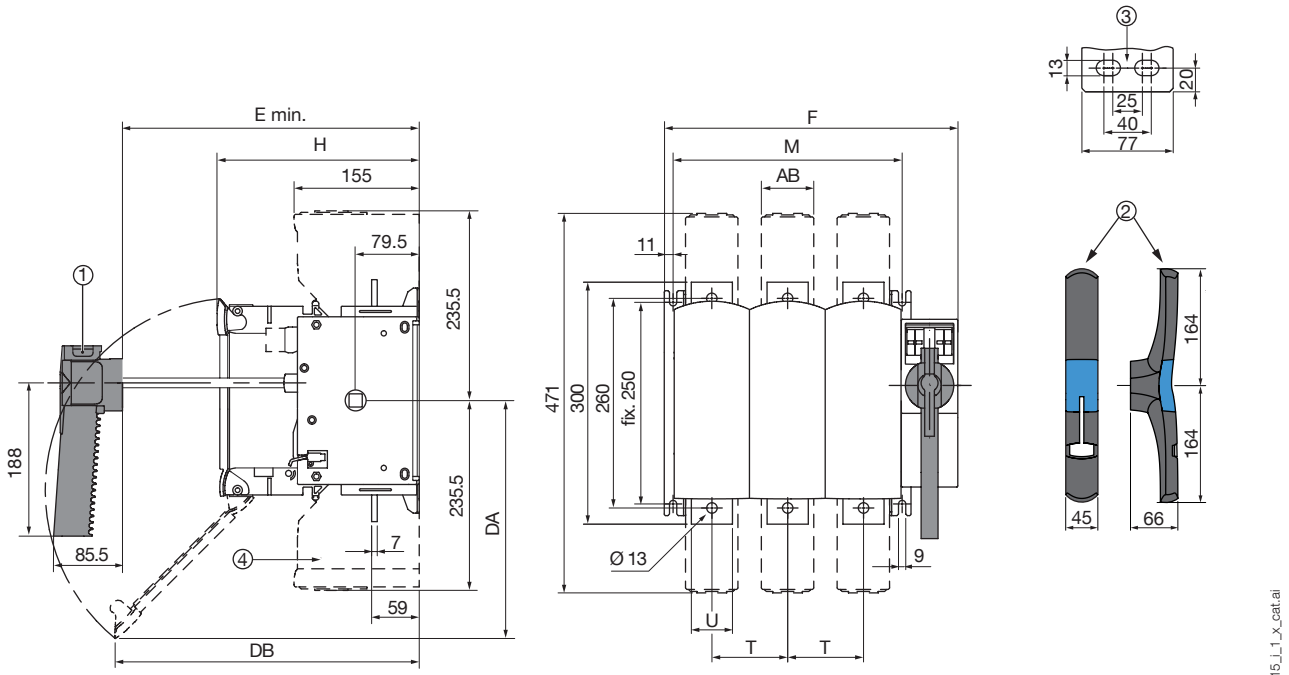

1. Handle for casing size 17.
2. Handle for casing size 18.
3. Connection terminals for casing size 18.
4. Terminal cover.

Rating (A)	Fuse size	Frame size	Overall dimensions	Case					Switch mounting		Connection		Terminal shrouds
			E min.	F 3 P	F 4 P	H	DA	DB	M 3p.	M 4p.	T	U	AB
630	3	17	265	364	458	250	300	380	284	378	94	51	65
800	3	17	265	364	458	250	300	380	284	378	94	51	65
800	4	18	304	442	562	289	355	295	362	482	120	77	88
CD 1250	4	18	304	442	562	289	355	295	362	482	120	77	88

Dimensions for external handles

25 to 32 A

Handle type	Front operation		Side operation	
	Direction of operation	Door drilling	Direction of operation	Door drilling
S1 type Box size 0	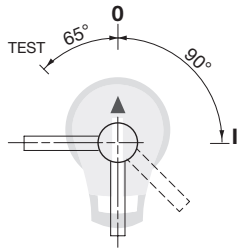	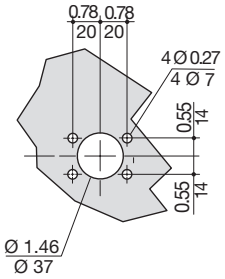	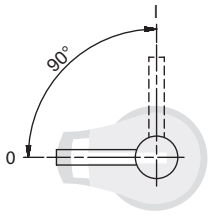	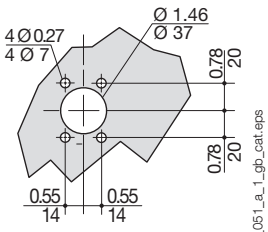

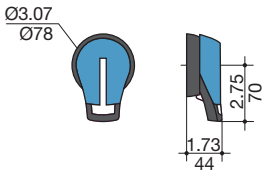

poign_051_a_1_gb_cat.eps

50 to 400 A

Handle type	Front operation		Side operation	
	Direction of operation	Door drilling	Direction of operation	Door drilling
S2 type Box size 11-16	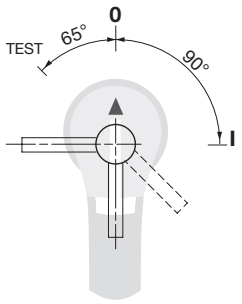	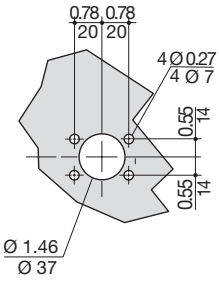	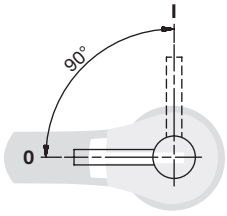	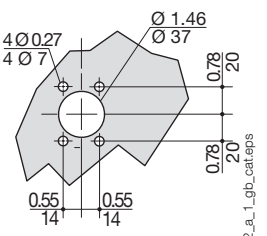

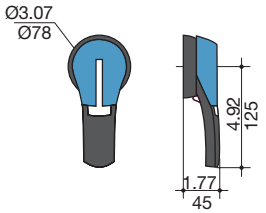

poign_052_a_1_gb_cat.eps

630 to 800 A

Handle type	Front operation		Side operation	
	Direction of operation	Door drilling	Direction of operation	Door drilling
S3 type Box size 17	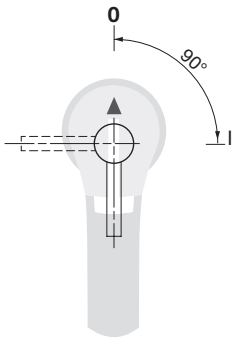	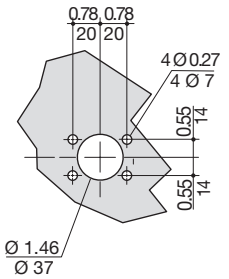	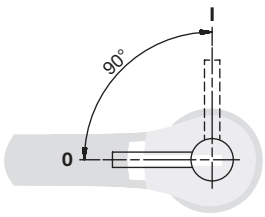	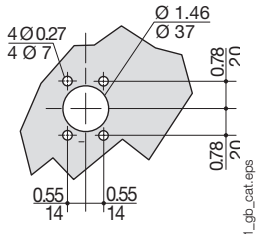

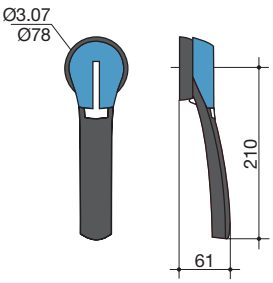

poign_053_a_1_gb_cat.eps

Dimensions for external handles (continued)

800 to 1250 A

Handle type	Front operation Direction of operation	Side operation Direction of operation	Door drilling
S3 type Box size 18 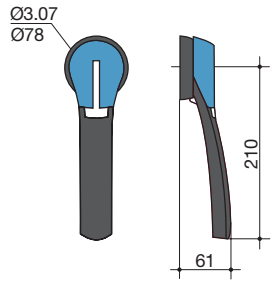		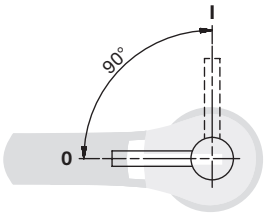	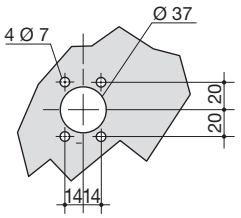
S4 type 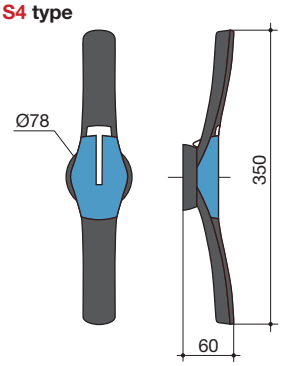	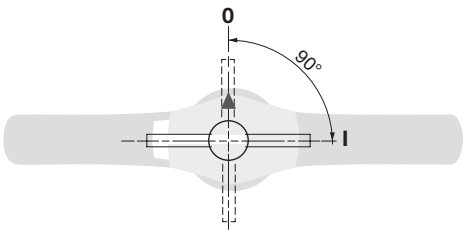		

poign_054_a_1_gb_cat.eps

Dimensions for direct-control casings

50 to 400 A

Case handle type	Direct control Operating direction
50 to 160 A Case 11 to 14	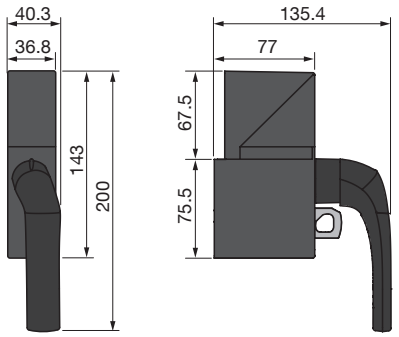 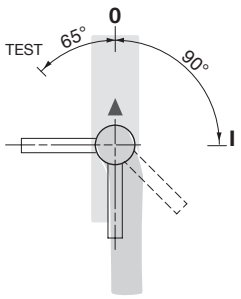
250 to 400 A Case 15 to 16	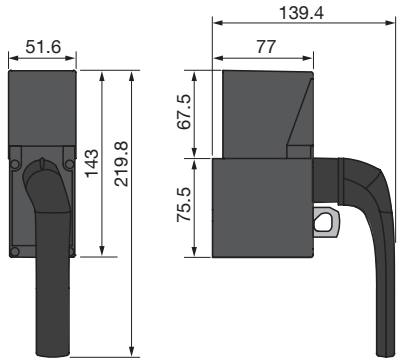 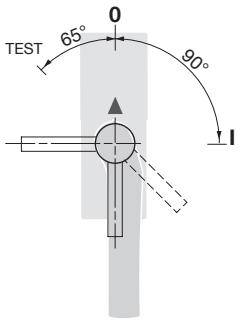

fuser_753_a_1_en_cat.ai