Photo-electric sensors - Miniature design

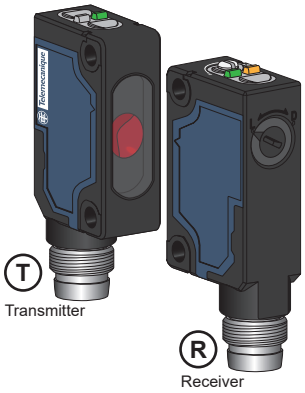



NPN - M8 Connector : **XUM2ANXBM8** *(*)*
PNP - M8 Connector : **XUM2APXBM8** *(*)*
NPN - 2 m Cable : **XUM2ANXBL2** *(*)*
PNP - 2 m Cable : **XUM2APXBL2** *(*)*
(*): Sold by pair

Thru-beam

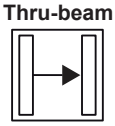

Package Content
(Example)





http://qr.tesensors.com/XU0008

Scan the Qr-code to access this Instruction Sheet in different languages or you can download it from our website at: **www.tesensors.com**

We welcome your comments about this document. You can reach us through the customer support page on your local website.

⚠⚠ DANGER

HAZARD OF ELECTRIC SHOCK, EXPLOSION OR ARC FLASH

- Disconnect all power before servicing equipment.
- Do not connect this device to AC power.
- The power voltage must not exceed the rated range.

Failure to follow these instructions will result in death or serious injury.

⚠ WARNING

IMPROPER SETUP OR INSTALLATION

- This equipment must only be installed and serviced by qualified personnel.
- Read, understand, and follow the compliance below, before installing the XUM Photo-electric sensor.
- Do not tamper with or make alterations on the unit.
- Comply with the wiring and mounting instructions.
- Check the connections and fastening during maintenance operations.
- The proper functioning of the XUM photoelectric sensor and its operating line must be checked regularly and according to the application (for example number of operations, level of environmental pollution, etc.).

Failure to follow these instructions can result in death, serious injury, or equipment damage.

Mounting and Tightening torques

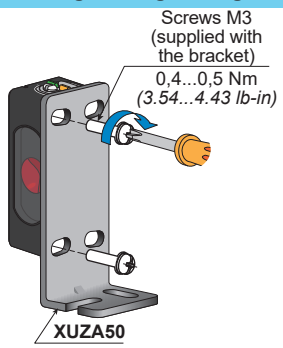

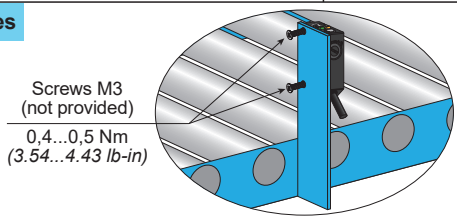

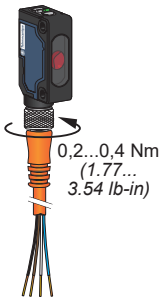

⚠ CAUTION

UNINTENDED EQUIPMENT OPERATION

Do not apply excessive impact on the sensor during the installation process, so as to prevent damage or deterioration in the degree of protection.

Failure to follow these instructions can result in injury or equipment damage.

LEDs and Setting

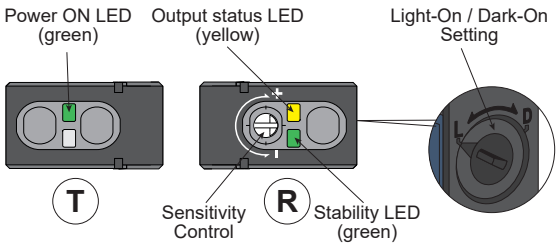

Wiring diagrams

M8 Connector - 4 pins

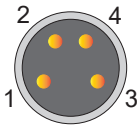

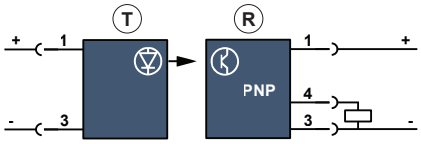

XUM2APXBM8

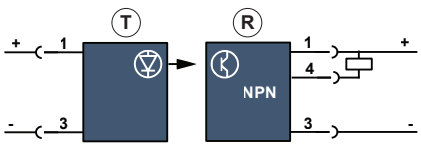

XUM2ANXBM8

2 m Cable - 3 wires



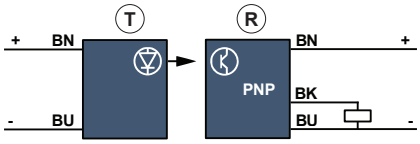

XUM2APXBL2

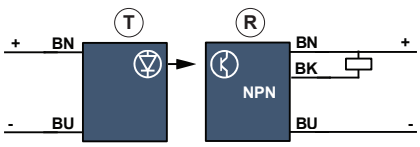

XUM2ANXBL2

Wiring precaution

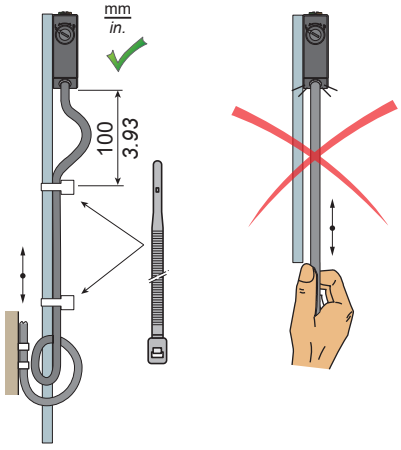

NOTICE

UNINTENDED EQUIPMENT OPERATION

Do not pull on the sensor cable so as to prevent damage or deterioration in the degree of protection

Failure to follow these instructions can result in equipment damage.

Electrical equipment should be installed, operated and maintained only by qualified personnel.
No responsibility is assumed by Schneider Electric for any consequences arising out of the use of this material.

© 2021 Schneider Electric. "All Rights Reserved."

Dimensions

mm / in.

1 mm = *0.0397 in.*

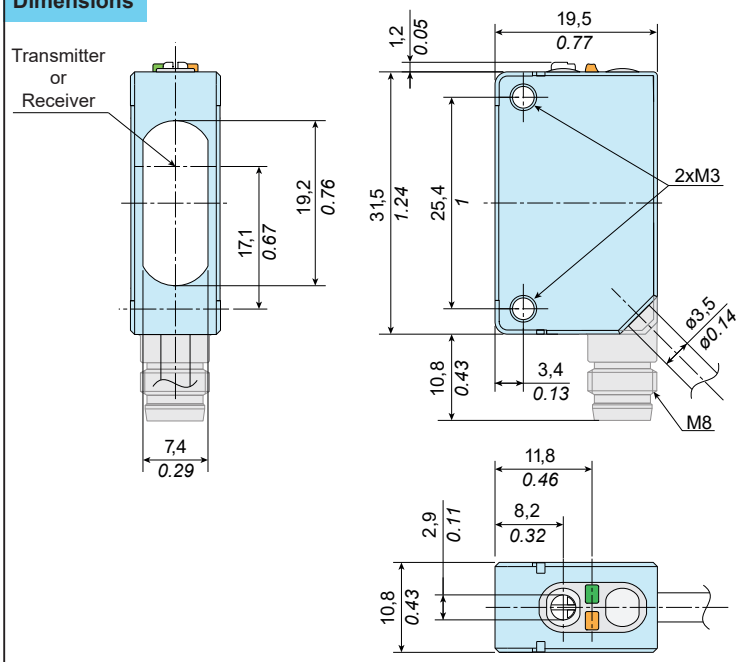

XUZA50

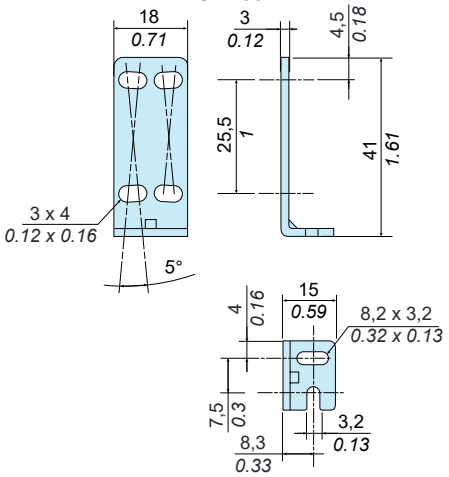

XUZASM04

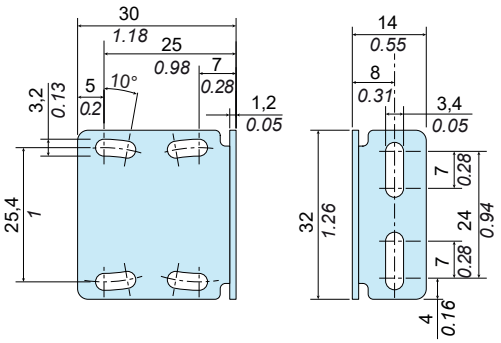

XUZASM02

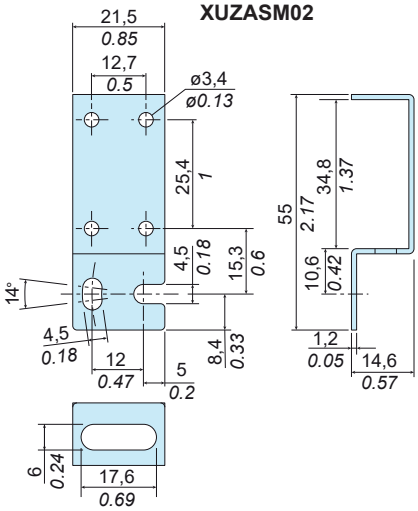

XUZASM03

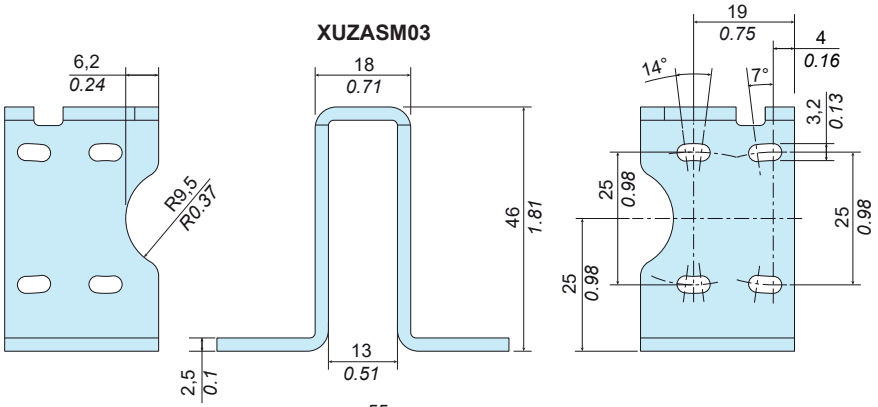

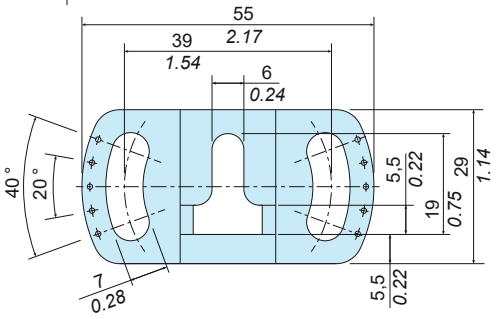

mm / in.

XUZDVM05 XUZDVM10 XUZDVM20

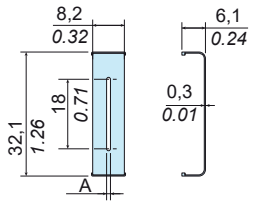

XUZDHM05 XUZDHM10 XUZDHM20

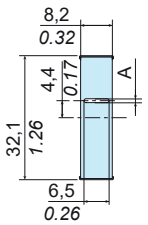

XUZDRM05 XUZDRM10 XUZDRM20

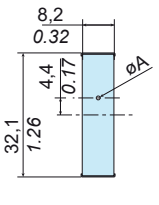

Width "A" mm	Width "A" in.	Vertical slit	Horizontal slit	Round slit
0,5	*0.02*	XUZDVM05	XUZDHM05	XUZDRM05
1	*0.04*	XUZDVM10	XUZDHM10	XUZDRM10
2	*0.08*	XUZDVM20	XUZDHM20	XUZDRM20

Accessories

Mounting Brackets (to order separately)

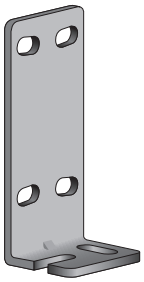

XUZA50

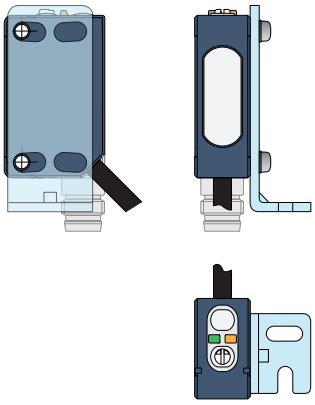

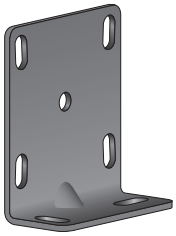

XUZASM04

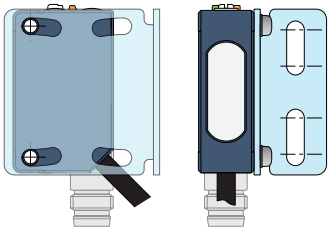

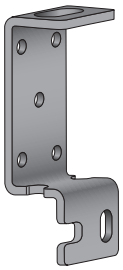

XUZASM02

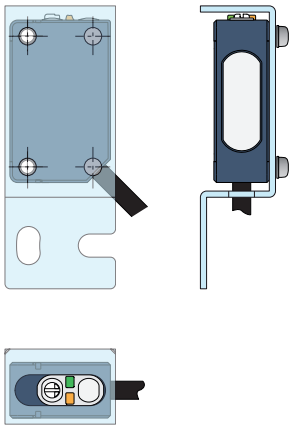

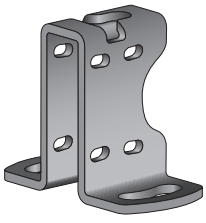

XUZASM03

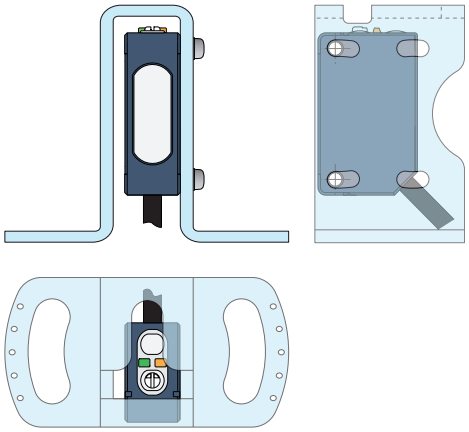



Screws M3 × 12 (supplied with the brackets)

Accessories *(continued)*

Slits for thru-beam model (to order separately)

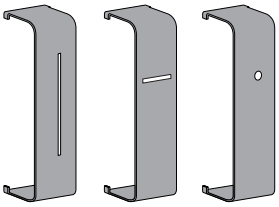

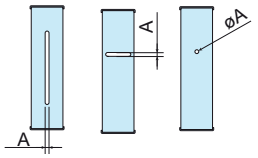

Slit and Sensing Range

A slit, which changes the beam size of through-beam sensors, can easily be attached to the sensing side of the through-beam projector and receiver.
Three different slit widths are available.

Slit			Sensing Range				Minimum Detectable Object Width			
Reference	Width: A		Used on (R)		Used on (R) + (T)		Used on (R)		Used on (R) + (T)	
	mm	*in.*	m	*ft.*	m	*ft.*	mm	*in.*	mm	*in.*
XUZDVM05	0,5	*0.02*	2,5	*8.2*	1	*3.28*	7	*0.28*	0,5	*0.02*
XUZDVM10	1	*0.04*	3,5	*11.5*	1,5	*4.92*	7	*0.28*	1	*0.04*
XUZDVM20	2	*0.08*	6	*19.7*	3,5	*11.5*	7	*0.28*	2	*0.08*
XUZDHM05	0,5	*0.02*	2	*6.56*	0,7	*2.3*	7	*0.28*	0,4	*0.016*
XUZDHM10	1	*0.04*	3	*9.84*	1,5	*4.92*	7	*0.28*	0,7	*0.028*
XUZDHM20	2	*0.08*	5,5	*18*	3	*9.84*	7	*0.28*	1,5	*0.06*
XUZDRM05	0,5	*0.02*	0,8	*2.62*	0,08	*0.26*	5	*0.2*	0,3	*0.012*
XUZDRM10	1	*0.04*	1,5	*4.92*	0,3	*0.98*	5	*0.2*	0,6	*0.024*
XUZDRM20	2	*0.08*	2,5	*8.2*	1,2	*3.94*	5	*0.2*	1,5	*0.06*

Note: Used on one side: Slit is attached to the receiver only.

Slit mounting

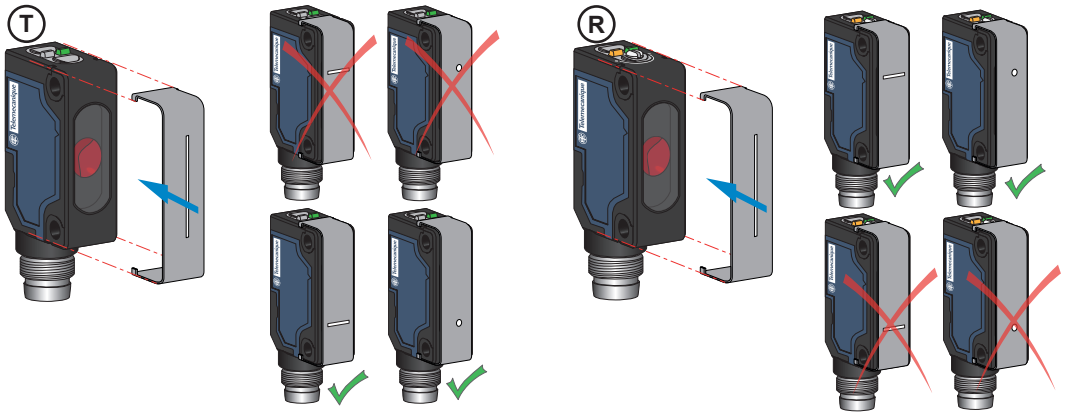

Pre-Wired Female Connectors

PVC cable for general use
PUR cable for severe industrial environments

M8, 4 pins					**M8 - M12, 4 pins**		
			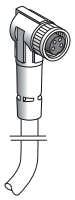				
Cable length	**PVC**	**PUR**	**PVC**	**PUR**	**Jumper length**	**PUR**	**PUR**
2 m / *6.56 ft.*	XZCPV0941L2	XZCP0941L2	XZCPV1041L2	XZCP1041L2	1 m / *3.28 ft.*	XZCR1509041J1	XZ CR1510041J1
5 m / *16.4 ft.*	XZCPV0941L5	XZCP0941L5	XZCPV1041L5	XZCP1041L5	2 m / *6.56 ft.*	XZCR1509041J2	XZCR1510041J2
10 m / *32.8 ft.*	XZCPV0941L10	XZCP0941L10	XZCPV1041L10	XZCP1041L10			

Sensor Position Adjustment

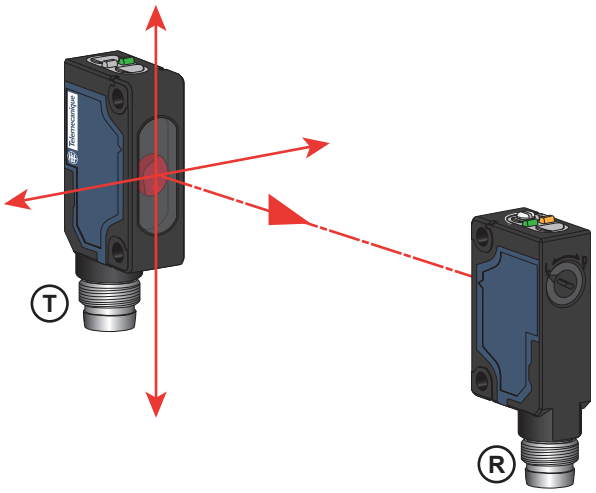

- Translate the transmitter or receiver, up/down and left/right. When the setting is optimal, the stability indicator (green) is lit.
- Check sensor operation with the object and adjust the sensor, if necessary.

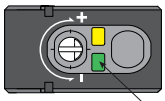

Stability LED (green):ON

Sensor Sensitivity Adjustment

	Light-on	Dark-on
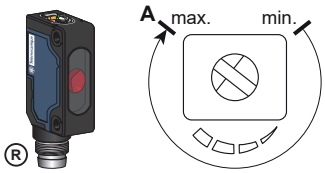	1-Before settings, start with the potentiometer the maximum position (resulting to point A).	1-Before settings, start with the potentiometer the maximum position (resulting to point A).
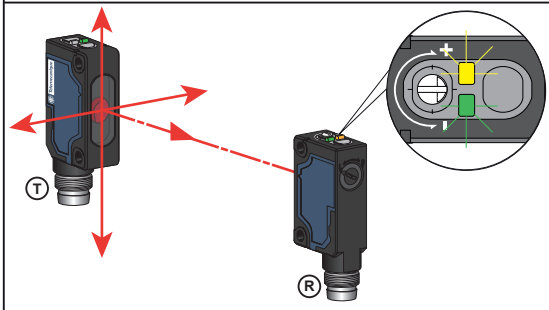	2-Connect the two sensors to the power supply (see page 1 for the wire connection & page 7 for the power voltage) Align the two sensors, as shown on the picture, until seeing the output led (yellow) & the stability led (green) switch on.	2-Connect the two sensors to the power supply (see page 1 for the wire connection & page 7 for the power voltage) Align the two sensors, as shown on the picture, until seeing the output led (yellow) & the stability led (green) switch on.
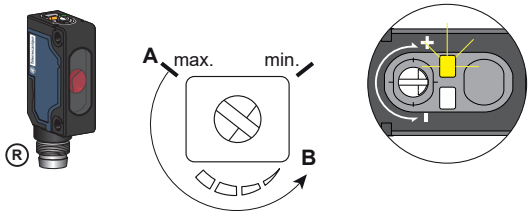	3-On the receiver, turn the potentiometer counter-clockwise until the stability led (green) switch off (resulting to point B).	3-On the receiver, turn the potentiometer counter-clockwise until the stability led (green) switch off (resulting to point B).
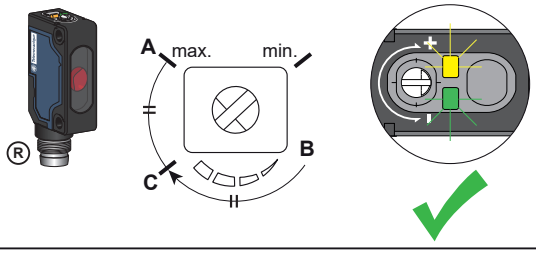	4-Set the middle point between the point A and B (resulting to point C). The receiver is set and ready to detect	4-Set the middle point between the point A and B (resulting to point C). The receiver is set and ready to detect

Output mode setting: Light-On or Dark-On (Light-On by default)

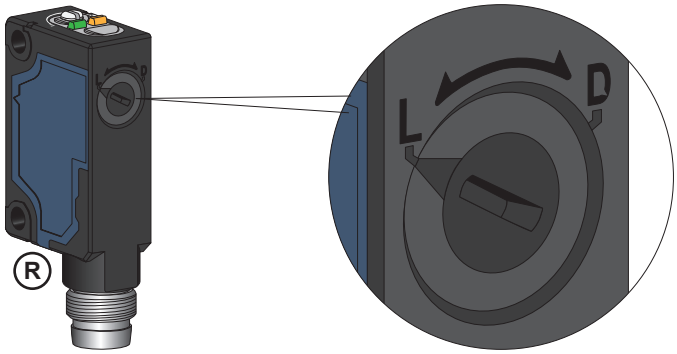

Light-On / Normally Closed	Dark-On / Normally Open
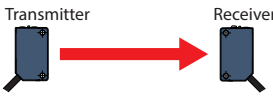 The Output is ON	 The Output is OFF
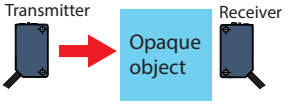 The Output is OFF	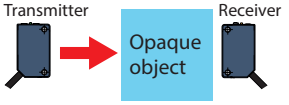 The Output is ON

Detection curves

Through-beam Type SA1E-T (Infrared LED w/sensitivity adjustment)
SA1E-TA (Red LED w/sensitivity adjustment)

• Excess Gain (Without slit)

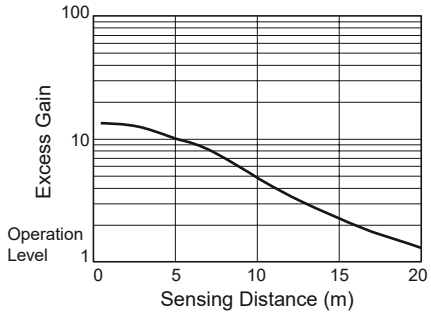

• Lateral Displacement (Without slit)

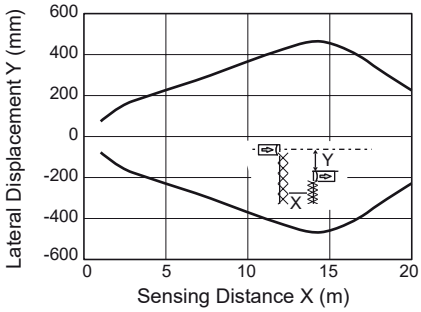

• Angle (Without slit)

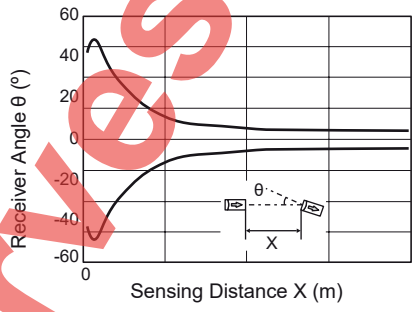

• Excess Gain (With vertical slit)

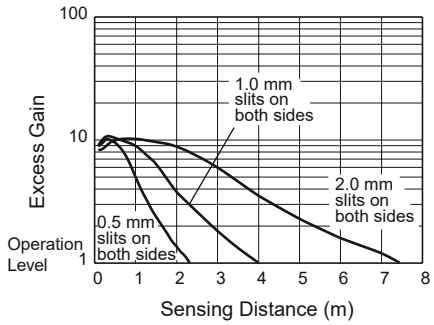

• Excess Gain (With horizontal slit)

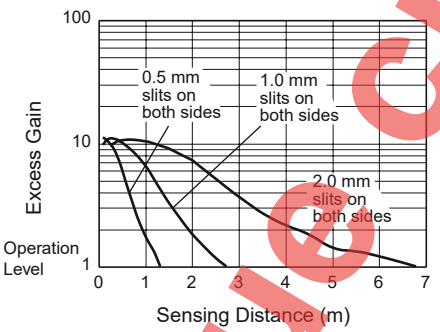

• Excess Gain (With round slit)

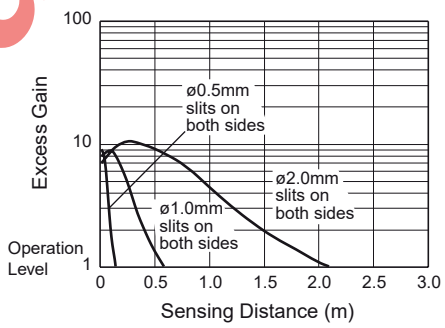

• Lateral Displacement (With 0.5-mm vertical slit)

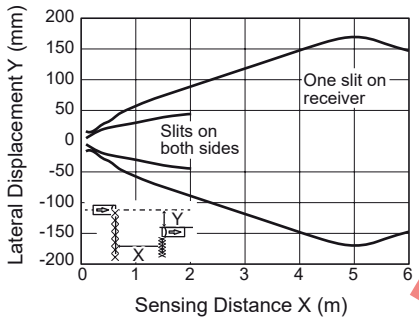

• Lateral Displacement (With 1.0-mm vertical slit)

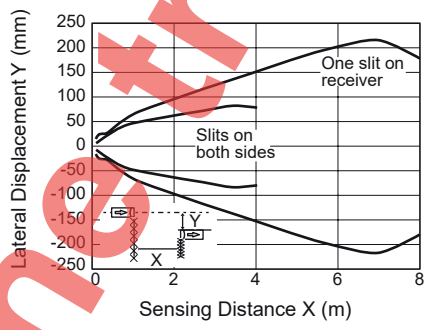

• Lateral Displacement (With 2.0-mm vertical slit)

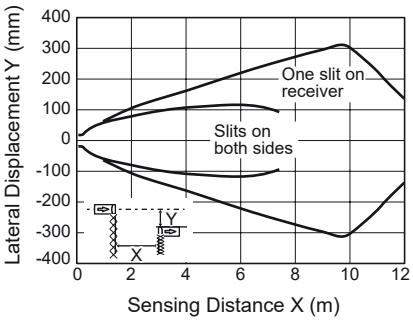

• Lateral Displacement (With 0.5-mm horizontal slit)

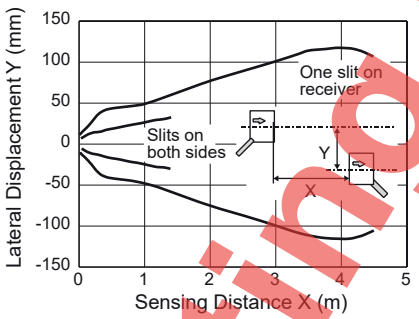

• Lateral Displacement (With 1.0-mm horizontal slit)

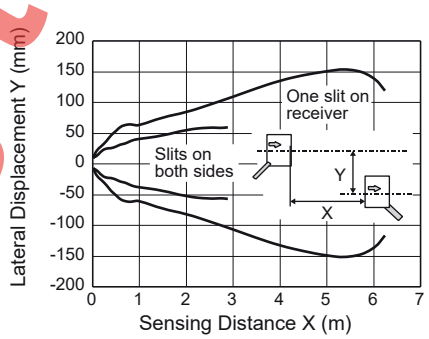

• Lateral Displacement (With 2.0-mm horizontal slit)

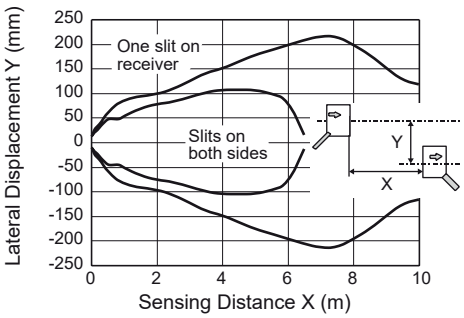

• Lateral Displacement (With ø0.5-mm round slit)



• Lateral Displacement (With ø1.0-mm round slit)

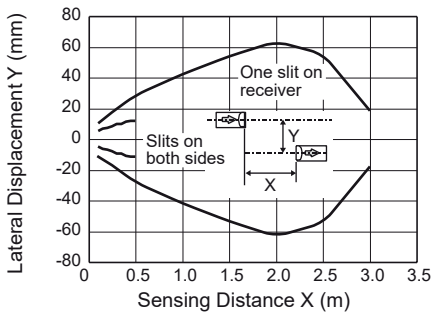

• Lateral Displacement (With ø2.0-mm round slit)

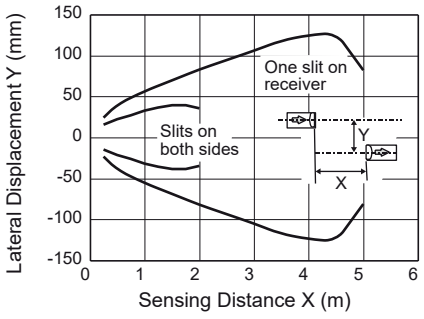

Waiting the true curves

Characteristics

Certification	CE - cULus
Sensing Range	15 m (with excess gain = 2)
Color of dectection light beam	Red
Spot size of the light beam on the target	320 mm x 320 mm at 10 m
Minimum side-to-side mounting distance	xx mm
Hysteresis	2% < H < 20%
Sensing distance setting	Potentiometer 1 turn (240 degres)
NO / NC selection	Potentiometer 1 turn (nom : 210 degres)
Output type	One open collector output, PNP or NPN
ON Voltage drop	< 2 V max.
Current consumption	Transmitter < 20 mA max. Receiver < 20 mA max.
Switching capacity	100 mA
First-up delay	100 ms max.
Response time	0,5 ms max.
Recovery time	0,5 ms max.
Switching frequency	1000 Hz min.
Electrostatic discharge immunity	4 kV (Contact), 8 kV (Air) conforming to **IEC 61000-4-2**
Electromagnetic field immunity	10 V/m conforming to **IEC 61000-4-3**
Fast transients immunity	Burst 5 khz - 2 kV conforming to **IEC 61000-4-4**
Conducted disturbances immunity	10 V conforming to **IEC 61000-4-6**
Emissivity Radiated disturbances	Class A conforming to **EN 55011 / CISPR 11**
Electrical shock	1 kV 500 Ohm (1,2/50 µs)
Power Voltage	12...24 Vdc Ripple p-p 10% maximum - Operating range 10...30 Vdc (including ripple)
Protection Circuit	Reverse polarity protection, Load short circuit protection, Reverse output polarity circuit
light Immunity	40 kLux (sunlight) 10 kLux (incandescent lamp) 500 lux Fluorescent light 40 kHz + LED 60 kHz - Direct illumination in opticl axis (HF lamps)
Ambient Temperature	Operating : - 30...+55 °C *(-22...+131 °F)*, Storage : - 40...+70 °C *(-40...+158 °F)*
Ambient Humidity	Operating : 35...95% RH, Storage : 35...95% RH
Degree of protection	IP65, IP67 conforming **EN/IEC 60529**
Vibration resistance	7 g_n, 10 to 55 Hz max.1.5mm(p-p) 2h - 3axis, conforming to **IEC 60068-2-6**
Shock resistance	50 g_n, 3 times - 3 axis, conforming to **IEC 60068-2-27**
Material	Housing : PBT, Lens : PMMA, Display : PC