55 Series Extruded Diecast Enclosure

Product overview

Aluminium extruded boxes with plastic end-caps for a range of applications such as, handheld industrial testing equipment, wireless diagnostic devices or portable industrial sensors and controls.

- Extruded aluminium profile
- Integral PCB mounting rails
- Front and rear plastic caps retained by 4x M3 screws
- Plastic screw covers for aesthetic appearance
- Recesses in lid and base for membrane keypads or overlays
- Textured sides

CEAREPB



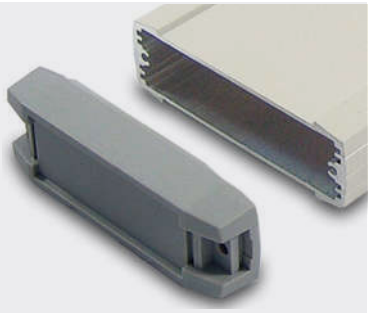

SPECIFICATION	
Materials	Extruded profile epoxy painted grade 6063 T5 tempered aluminium End caps and screw covers high grade ABS, UL94-V0
Standard colours	Profile light grey similar to RAL 9002 or black similar to RAL 9004 End caps and screw covers RAL 7044, light grey or RAL 9004, black
Standard unit includes	Profile, 2x end caps, 4x screw covers, 4x mounting screws

BLACK	LIGHT GREY	LENGTH	WIDTH	HEIGHT
CEAREPB01	CEAREPG01	130mm	82mm	27mm
CEAREPB02	CEAREPG02	160mm	82mm	27mm
CEAREPB03	CEAREPG03	160mm	102mm	37mm
CEAREPB04	CEAREPG04	190mm	102mm	37mm
CEAREPB05	CEAREPG05	190mm	122mm	47mm
CEAREPB06	CEAREPG06	220mm	122mm	47mm

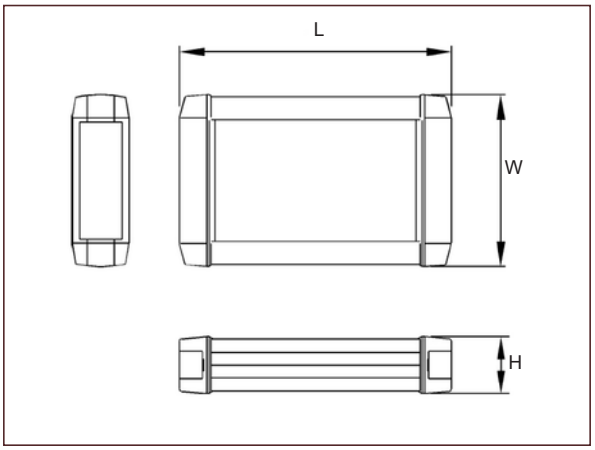

KEY FEATURES

Aluminium profile | Lightweight | PCB mounting rails



+44 (0)1638 716101 | sales@camdenboss.com | www.camdenboss.com

We operate a constant improvement policy, our products are subject to change without notice.
Vers 4

bsi ISO 9001 Quality Management Systems CERTIFIED
FM 28614