WIRING DIAGRAM

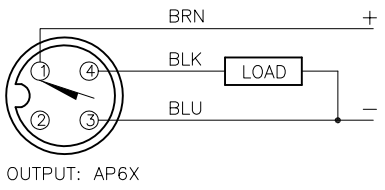

OUTPUT: AP6X

SHORT–CIRCUIT AND OVERLOAD PROTECTED

LOCKNUT LN–M12

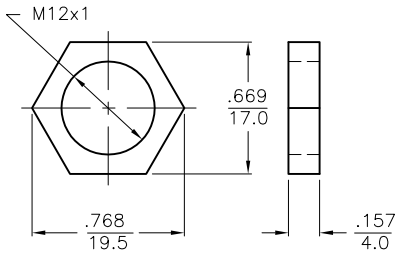

SPECIFICATIONS

RATED OPERATING DISTANCE	5.0mm [.197"]
MOUNTING MODE	NON–FLUSH
MIN. REPEAT ACCURACY	≤ 2%
TEMPERATURE DRIFT	≤ ±10%
HYSTERESIS	3–15%
OPERATING TEMPERATURE	–25°C to +70°C (–13°F to +158°F)
RATED OPERATIONAL VOLTAGE	10–30 VDC
RESIDUAL RIPPLE	≤10%
RATED OPERATIONAL CURRENT	≤ 200 mA
NO–LOAD CURRENT	≤ 15 mA
RESIDUAL CURRENT	≤ 0.1 mA
RATED INSULATION VOLTAGE	≤ 0.5 kV
SHORT–CIRCUIT PROTECTED	YES
MAX. VOLTAGE DROP	≤ 1.8 V
REVERSE POLARITY PROTECTION	INCORPORATED
WIRE–BREAK PROTECTION	INCORPORATED
OUTPUT FUNCTION	NORMALLY OPEN, 3–WIRE, PNP
MAX. SWITCHING FREQUENCY	≤ 2 kHz
HOUSING MATERIAL	METAL, BRASS/CHROME PLATED
ACTIVE FACE	PLASTIC, PA12–GF30
CONNECTION	M12x1
SHOCK RESISTANCE	30 g, 11 ms
VIBRATION RESISTANCE	55 Hz, 1 mm AMPLITUDE (IN ALL 3 PLANES)
DEGREE OF PROTECTION	IP67
SWITCHING STATUS INDICATION	LED: YELLOW

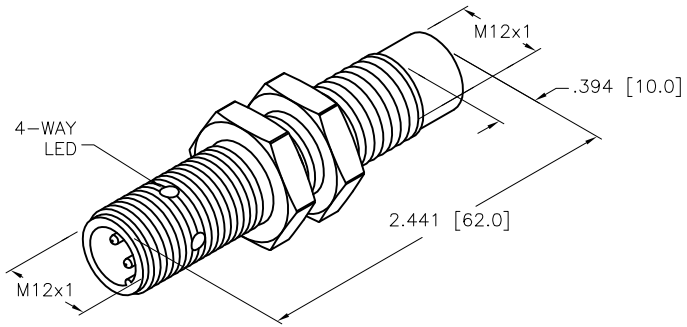

SOURCE DRAWING - FOR REFERENCE ONLY

REV	DESCRIPTION	BY	DATE	ECO NO.
D	UPDATE BARREL LENGTH	RDS	07/10/12	39298

RELATED DOCUMENTS
1.
2.
3.
4.

3RD ANGLE PROJECTION

THIS DRAWING IS CONFIDENTIAL AND THE PROPERTY OF TURCK INC. USE OF THIS DOCUMENT WITHOUT WRITTEN PERMISSION IS PROHIBITED.

TURCK INC
High Technology Sensors and Automation Controls
3000 CAMPUS DRIVE
MINNEAPOLIS, MN 55441
1–800–544–7769
(763) 553–7300
(763) 553–0708 fax
turck.com

MATERIAL

FINISH

ALL DIMENSIONS DISPLAYED ON THIS DRAWING ARE FOR REFERENCE ONLY

CONTACT TURCK FOR MORE INFORMATION

DRFT GMB | DATE 4/4/89

APVD | SCALE 1=1.0

UNIT OF MEASUREMENT
INCH [MILLIMETER]

DO NOT SCALE THIS DRAWING

DESCRIPTION
NI 5–G12–AP6X–H1141

IDENTIFICATION NO. T4635692 | REV D

FILE: T4635692 | SHEET 1 OF 1

Approved 07/10/2012, work order #30997 by J.M.