

PNOZ s30

PILZ
THE SPIRIT OF SAFETY

Safety relays

Operating Manual-1001715-EN-18

This document is the original document.

All rights to this documentation are reserved by Pilz GmbH & Co. KG. Copies may be made for the user's internal purposes. Suggestions and comments for improving this documentation will be gratefully received.

Source code from third-party manufacturers or open source software has been used for some components. The relevant licence information is available on the Internet on the Pilz homepage.

Pilz®, PIT®, PMI®, PNOZ®, Primo®, PSEN®, PSS®, PVIS®, SafetyBUS p®, SafetyEYE®, SafetyNET p®, the spirit of safety® are registered and protected trademarks of Pilz GmbH & Co. KG in some countries.


SD means Secure Digital

Section 1	**Introduction**		**7**
	1.1	Validity of documentation	7
	1.2	Using the documentation	7
	1.3	Definition of symbols	7
Section 2	**Overview**		**9**
	2.1	Unit structure	9
	2.1.1	Range	9
	2.1.2	Unit features	9
	2.2	Front/side view	10
Section 3	**Safety**		**12**
	3.1	Intended use	12
	3.2	Safety regulations	12
	3.2.1	Safety assessment	12
	3.2.2	Use of qualified personnel	12
	3.2.3	Warranty and liability	13
	3.2.4	Disposal	13
	3.2.5	For your safety	13
Section 4	**Function description**		**14**
	4.1	Introduction	14
	4.2	Block diagram	14
	4.3	Functions	15
	4.3.1	Standstill	15
	4.3.2	Speed	16
	4.3.3	Speed range	16
	4.3.4	Position	17
	4.3.5	Direction	19
	4.3.6	Monitoring for broken shearpins	20
	4.3.7	Hysteresis	21
	4.3.8	Start types	21
	4.3.9	Start-up delay	21
	4.3.10	Synchronous start	21
	4.3.11	Switch delay	22
	4.3.12	Feedback loops	22
	4.3.13	Switching direction on semiconductor outputs	22
	4.3.14	Analogue output	23
	4.3.15	Units	23
	4.3.16	Timing diagram for speed monitoring	24
	4.4	Speed configuration	25
	4.4.1	Select Inputs	27
	4.4.2	Switch functions	28
	4.4.3	Basic configuration	31
	4.4.4	Chip card	32
	4.5	Input device types	32
	4.5.1	Proximity switch	32

	4.5.2	Rotary encoders	33
	4.5.2.1	Output signals	34
	4.5.2.2	Adapter for incremental encoders	35
Section 5	**Installation**		**36**
	5.1	General installation guidelines	36
	5.1.1	Dimensions	36
Section 6	**Wiring**		**37**
	6.1	General wiring guidelines	37
	6.2	Pin assignment of RJ45 socket	37
	6.3	Supply voltage	37
	6.4	Connection of proximity switches	38
	6.5	Connection of a rotary encoder	39
	6.5.1	Connect rotary encoder to speed monitor	39
	6.5.2	Connect rotary encoder with Z index to speed monitor	40
	6.5.3	Connect rotary encoder to the speed monitor via an adapter	41
	6.6	Connection of proximity switch and rotary encoder	41
	6.7	Reset circuit	43
	6.8	Feedback circuit	43
	6.9	Select inputs	43
	6.10	Semiconductor outputs	43
	6.11	Analogue output	44
	6.12	EMC-compliant wiring	44
Section 7	**Display menu - Configuration**		**47**
	7.1	Create configuration overview	47
	7.2	Operate rotary knob	47
	7.3	Configure Speed Monitor	48
	7.4	Password protection	48
	7.5	Use chip card	49
	7.5.1	Insert chip card	50
	7.5.2	Write data to chip card	50
	7.5.3	Read data from chip card	51
	7.5.4	Transfer device parameters	51
	7.5.5	Duplicate chip card	52
	7.6	Save configuration with Software SmartCardCommander	52
	7.7	Menu overview	54
	7.7.1	Permanent display	54
	7.7.2	Basic settings Ini pnp pnp	54
	7.7.3	Basic settings for the rotary encoder	55
	7.7.4	Settings	57
	7.7.5	Advanced settings	64
	7.7.6	Information	66
	7.8	Example: Configure basic configuration 2	71

Section 8	**Create configuration in PNOZsigma Configurator**		**72**
	8.1	Download project from the PNOZsigma Configurator to the PNOZ s30	72
	8.2	Transfer project from PNOZ s30 to the PNOZsigma Configurator	73
Section 9	**Operation and diagnostics**		**75**
	9.1	LED indicators	75
	9.2	Display	75
	9.2.1	Error stack entries	75
	9.2.2	Current error messages	76
	9.2.3	Open circuit message	82
	9.2.4	Frequency difference message on proximity switch	82
	9.3	Function test of the relay outputs	83
Section 10	**Technical details**		**84**
	10.1	Safety characteristic data	90
	10.2	Signal level of the encoders	91
Section 11	**Supplementary data**		**92**
	11.1	Service life graph of output relays	92
	11.2	Permitted operating height	93
	11.3	Categories	94
	11.3.1	Safety level	94
	11.3.2	Safety functions	95
	11.3.3	Safety-related characteristic data for operation with non-safety-related rotary encoder without additional requirements	95
	11.3.3.1	Permitted encoder types and output signals	95
	11.3.3.2	Safety-related architecture	96
	11.3.3.3	Achievable safety level	96
	11.3.4	Safety-related characteristic data for operation with non-safety-related rotary encoder with mechanical fault exclusion	96
	11.3.4.1	Permitted encoder types and output signals	96
	11.3.4.2	Safety-related architecture	97
	11.3.4.3	Achievable safety level	97
	11.3.5	Safety-related characteristic data for operation with non-safety-related rotary encoder with diagnostics via the drive controller	97
	11.3.5.1	Permitted encoder types and output signals	97
	11.3.5.2	Requirements of the drive controller	98
	11.3.5.3	Safety-related architecture	98
	11.3.5.4	Achievable safety level	99
	11.3.6	Safety-related characteristic data for operation with a safe rotary encoder	99
	11.3.6.1	Permitted encoder types and output signals	99
	11.3.6.2	Safety-related architecture	99
	11.3.6.3	Achievable safety level	100
	11.3.7	Safety-related characteristic data for operation with a safe rotary encoder with Z index	100
	11.3.7.1	Permitted encoder types and output signals	100
	11.3.7.2	Safety-related architecture	101
	11.3.7.3	Achievable safety level	101

	11.3.8	Safety-related characteristic data for operation with non-safety-related rotary encoder and proximity switch	101
	11.3.8.1	Permitted encoder types and output signals	101
	11.3.8.2	Safety-related architecture	102
	11.3.8.3	Achievable safety level	102
	11.3.9	Safety-related characteristic data for operation with 2 proximity switches	103
	11.3.9.1	Permitted encoder types and output signals	103
	11.3.9.2	Safety-related architecture	103
	11.3.9.3	Achievable safety level	104
	11.4	Examples	105
	11.4.1	Connection of proximity switch	105
	11.4.1.1	Features	105
	11.4.1.2	Configuration overview	105
	11.4.2	Incremental encoder connection	107
	11.4.2.1	Features	107
	11.4.2.2	Configuration overview	107
Section 12	**Order reference**		**109**
	12.1	Product	109
	12.2	Accessories	109

1 Introduction

1.1 Validity of documentation

This documentation is valid for the product PNOZ s30 from Version 3.0.

This operating manual explains the function and operation, describes the installation and provides guidelines on how to connect the product.

1.2 Using the documentation

This document is intended for instruction. Only install and commission the product if you have read and understood this document. The document should be retained for future reference.

1.3 Definition of symbols

Information that is particularly important is identified as follows:



DANGER!

This warning must be heeded! It warns of a hazardous situation that poses an immediate threat of serious injury and death and indicates preventive measures that can be taken.



WARNING!

This warning must be heeded! It warns of a hazardous situation that could lead to serious injury and death and indicates preventive measures that can be taken.



CAUTION!

This refers to a hazard that can lead to a less serious or minor injury plus material damage, and also provides information on preventive measures that can be taken.



NOTICE

This describes a situation in which the product or devices could be damaged and also provides information on preventive measures that can be taken. It also highlights areas within the text that are of particular importance.



INFORMATION

This gives advice on applications and provides information on special features.

2 Overview

2.1 Unit structure

2.1.1 Range

Scope of supply:

- Speed monitor PNOZ s30
- Terminator
- Connection terminals
- Chip card
- Chip card holder
- Documentation on data medium

2.1.2 Unit features

Application of the product PNOZ s30:

Speed monitor for safe monitoring of standstill, speed, speed range, position and direction.

The product has the following features:

- Measured value recorded by
  - Incremental encoder
  - Proximity switch
- Measured variables
  - Standstill
  - Speed
  - Speed range
  - Position
  - Direction
  - Analogue voltage (track S)
- Positive-guided relay outputs
  - 2 safety contacts (NO)
  - 2 auxiliary contacts (NC)
- Semiconductor outputs
  - 4 auxiliary outputs, one output configurable as an analogue output
- Expansion interface for 2 more safe relay outputs that be controlled separately
- Can be configured via the display on the speed monitor
- Configuration is stored on a chip card

- Display
  - Current frequencies
  - Current position
  - Warning and error messages
- Status and fault LEDs
- Encoder connection technology:
  RJ45 socket

2.2 Front/side view

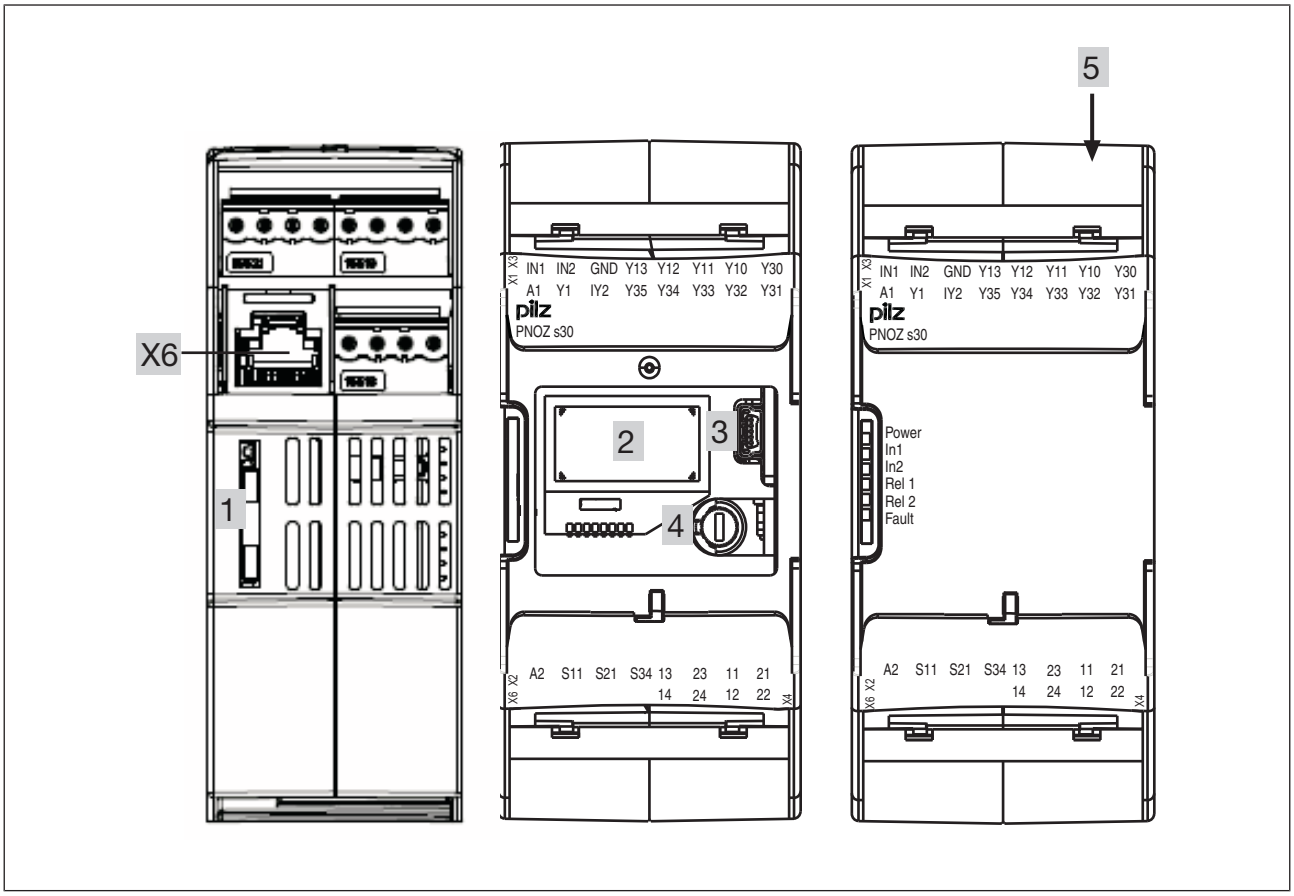

Fig.: Left: Side view, centre: Front view without cover, right: Front view with cover

Legend:

- A1, A2:
  Supply connections
- In1, In2, GND:
  Proximity switch 1 - In1 (track A) and 2 - In2 (track B) and GND
- Y10 ... Y13:
  Select inputs (SEL1, SEL2, SEL4, SEL8)
- 13-14 and 23-24:
  Relay outputs REL 1 and REL 2 (safety contacts)
- 11-12 and 21-22:
  Relay outputs REL 1 and REL 2 (auxiliary contacts)

- Y32 ... Y34: Semiconductor outputs OUT 1 …- OUT 3 (auxiliary outputs)
- Y35: Semiconductor output OUT 4 (auxiliary output or analogue outputs)
- S11: +24 V / 30 mA (supply for S34, Y1 and Y2)
- S21: 0 V (GND for S11, S34, Y1 and Y2)
- S34: Start input
- Y1, Y2:
  Y1: Feedback input for Rel. 1
  Y2: Feedback input for Rel. 2
- Y30: 0 V ext (GND for select input and semiconductor outputs)
- Y31: 24 V ext (supply for semiconductor outputs)
- X6: RJ45 socket for connecting the encoder
  (tracks A, /A, B, /B, Z, /Z, S and GND). Proximity switches can be connected via RJ45 socket or connection terminals.
- 1: Chip card
- 2: Display
- 3: USB connection (service only)
- 4: Rotary knob
- 5: Expansion interface for 2 more external relay outputs
- LEDs:
  - Power
  - In1
  - In2
  - Rel 1
  - Rel 2
  - Fault

3 Safety

3.1 Intended use

The speed monitor monitors standstill, speed, speed range, position and direction in accordance with EN ISO 13849-1 up to PL e and EN IEC 62061 up to SIL CL 3.



WARNING!

Users must take appropriate measures to detect or exclude errors (e.g. slippage or broken shearpin) which cause the frequency of the encoder signal to no longer be proportional to the monitored speed.

Appropriate measures are:

- Using the monitored encoder to also control the drive
- Mechanical solutions
- Z-frequency monitoring with an additional proximity switch (Ini pnp) on the same axis

- The product PNOZ s30 meets the requirements of the standards EN 81-20, EN 81-22 and EN 81-50, harmonised under the Lifts Directive 2014/33/EU, and the requirements of the standard EN 115-1, harmonised under the Machinery Directive 2006/42/EC.
- The programmable safety system should be installed in a protected environment that meets at least the requirements of pollution degree 2.
  Example: Protected inside space or control cabinet with protection type IP54 and corresponding air conditioning.
- When using the product within the scope of EN 81-20, EN 81-22 and EN 81-50, ensure that the supply voltage and the switching capacity of the relay outputs satisfy the requirements for overvoltage category III (e.g. by reducing the voltages to 24 V).

3.2 Safety regulations

3.2.1 Safety assessment

Before using a device it is necessary to perform a safety assessment in accordance with the Machinery Directive.

Functional safety is guaranteed for the product as a single component. However, this does not guarantee the functional safety of the overall plant/machine. In order to achieve the required safety level for the overall plant/machine, define the safety requirements for the plant/machine and then define how these must be implemented from a technical and organisational standpoint.

3.2.2 Use of qualified personnel

The products may only be assembled, installed, programmed, commissioned, operated, maintained and decommissioned by competent persons.

A competent person is a qualified and knowledgeable person who, because of their training, experience and current professional activity, has the specialist knowledge required. To be able to inspect, assess and operate devices, systems and machines, the person has to be informed of the state of the art and the applicable national, European and international laws, directives and standards.

It is the company's responsibility only to employ personnel who

- Are familiar with the basic regulations concerning health and safety / accident prevention,
- Have read and understood the information provided in the section entitled Safety
- Have a good knowledge of the generic and specialist standards applicable to the specific application.

3.2.3 Warranty and liability

All claims to warranty and liability will be rendered invalid if

- The product was used contrary to the purpose for which it is intended,
- Damage can be attributed to not having followed the guidelines in the manual,
- Operating personnel are not suitably qualified,
- Any type of modification has been made (e.g. exchanging components on the PCB boards, soldering work etc.).

3.2.4 Disposal

- In safety-related applications, please comply with the mission time T_M in the safety-related characteristic data.
- When decommissioning, please comply with local regulations regarding the disposal of electronic devices (e.g. Electrical and Electronic Equipment Act).

3.2.5 For your safety

- The device is designed exclusively for use in an industrial environment. It is not suitable for use in a domestic environment, as this can lead to interference.
- The guarantee is rendered invalid if the housing is opened or unauthorised modifications are carried out.
- Sufficient fuse protection must be provided on all output contacts with capacitive and inductive loads.

4 Function description

4.1 Introduction

Proximity switches or encoders record measured values, which are evaluated in the speed monitor PNOZ s30. Up to 9 monitoring functions can be configured (F1 ... F9) which are run at a time.

Via the Select inputs, up to 16 different parameter sets (P0 ... P15) of the monitoring function can be chosen, e.g. to monitor various operating modes.

Configuration of the monitoring functions is menu-driven, using a rotary knob. The outputs switch depending on the configuration.

An interface is available to connect a contact expansion module PNOZsigma, enabling the number of outputs to be expanded.

The relay meets the following safety requirements:

- The circuit is redundant with built-in self-monitoring.
- The safety device remains effective in the case of a component failure.

4.2 Block diagram

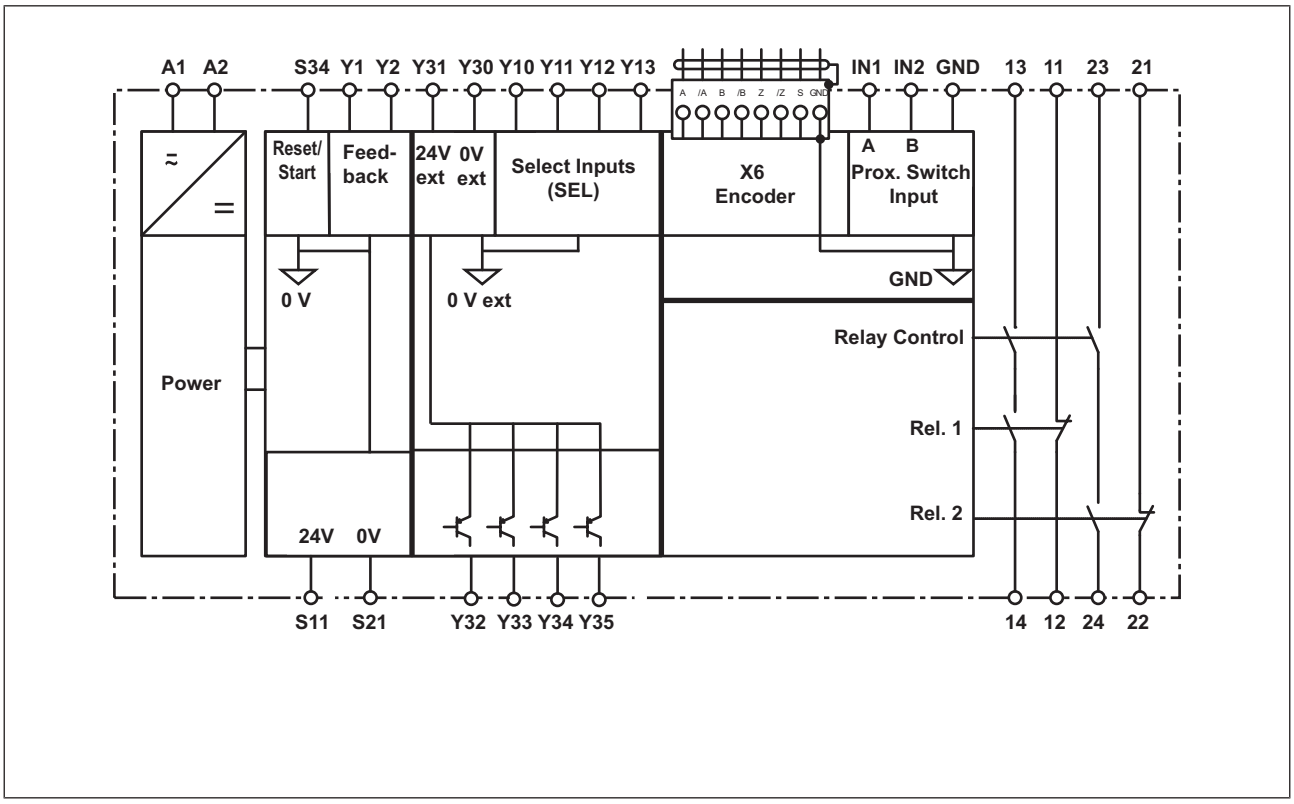



NOTICE

The individual blocks are galvanically isolated from each other:

- Supply voltage: A1, A2
- Encoder and initiator inputs: GND, In1, In2, RJ45 socket and shield
- Start and feedback circuits: S21, S11, S34, Y1, Y2
- Semiconductor outputs and select inputs: Y30, Y31, Y32, Y33, Y34, Y35, Y10, Y11, Y12, Y13
- Relay output 13, 14
- Relay output 11, 12
- Relay output 23, 24
- Relay output 21, 22

If possible, the connections for the various earth potentials (GND, S21, Y30 und A2) should not be connected on the PNOZ s30 but should be connected directly to the GNDs on the connected units, otherwise noise susceptibility may be increased significantly (conductor loops are not permitted).

4.3 Functions

The following monitoring functions can be configured:

4.3.1 Standstill

With standstill monitoring, the output is switched on when the value falls below the stated standstill value; if the standstill value is exceeded, the output switches off.

4.3.2 Speed

With speed monitoring, the output switches off when the configured value is exceeded.

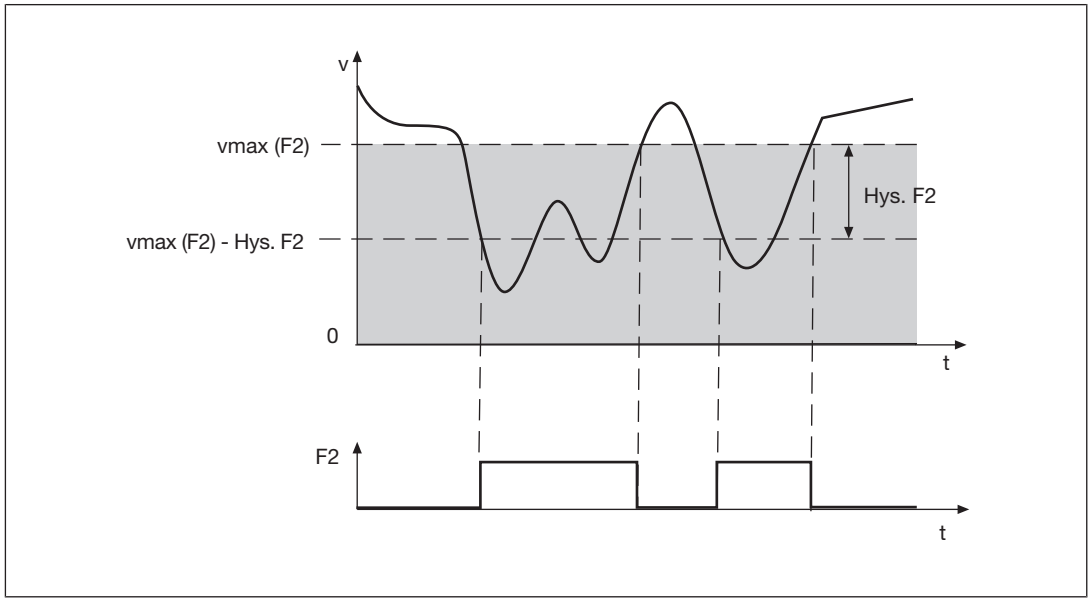

Fig.: Sequence of standstill and speed monitoring process

4.3.3 Speed range

With range monitoring, the output switches off if the rotational speed (velocity, frequency) is outside the configured range.

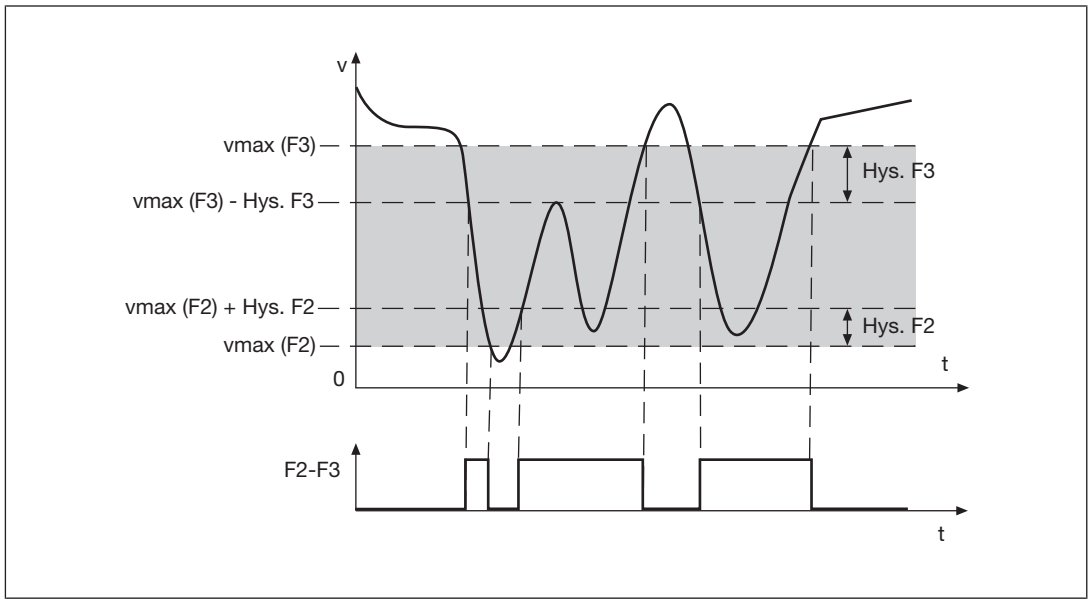

Fig.: Sequence of speed range monitoring process

4.3.4 Position

When position monitoring is active, the current position is taken as a reference position in the middle of the position window (configured window width), and the assigned output is switched on. The output will stay switched on provided the current position is within the position window. A max. 4 positions to be monitored can configured at the same time.

If the position moves outside the configured range, position monitoring is deactivated and the assigned outputs are switched off.

Position monitoring can be started (activated) automatically or monitored:

- **Monitored start (default)**
  - Position monitoring is started when a rising edge has been detected at the start input.
  - Active position monitoring is not started again by another rising edge at the start input (retriggering is not possible).
  - Active position monitoring continues unchanged even if a different parameter set is selected, which also uses position monitoring. This also applies if position monitoring is used in a different switch function.
  - Active position monitoring is reset if another parameter set is selected, which does not use position monitoring.

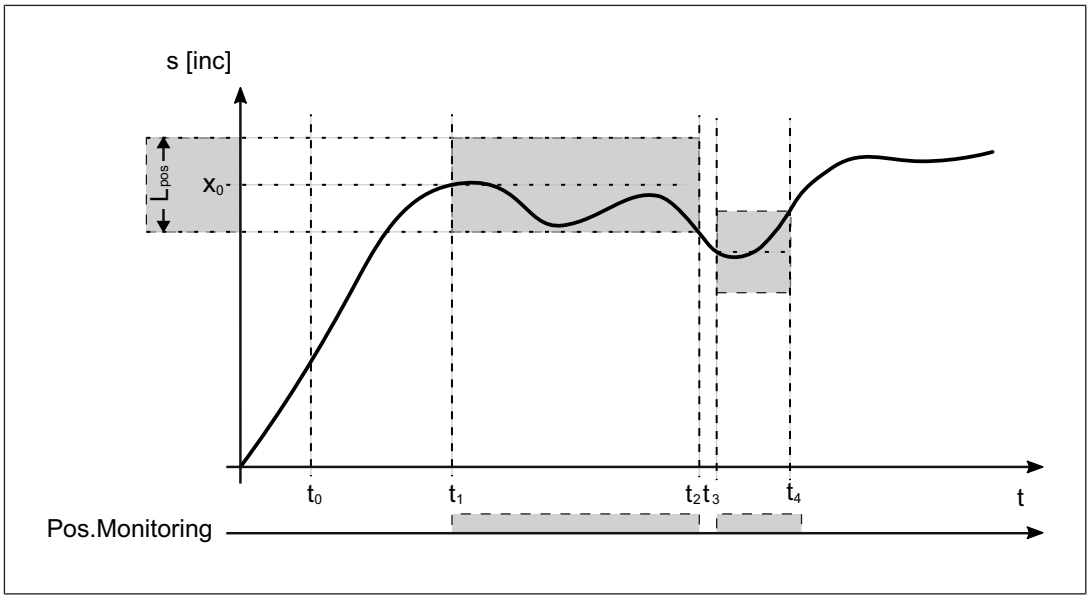

Fig.: Sequence of position monitoring with monitored start

Legend

x0	Reference position
Lpos	Position window
t_0	Device on
t_1	Start of position monitoring by rising edge at the start input (S34)
t_2	Position leaves the position window, assigned outputs will switch off
t_3	Restart of position monitoring by rising edge at the start input (S34)
t_4	Position leaves the position window, assigned outputs will switch off

- **Automatic start**
  - Position monitoring is started when a rising edge has been detected at the start input.
  - Position monitoring is started when the parameter set has been switched over and position monitoring is used in the current parameter set.
  - Position monitoring is restarted when the limit value has been exceeded and a rising edge has been detected at the start input.
  - Active position monitoring is not started again by another rising edge at the start input.
  - Active position monitoring is restarted if another parameter set is selected, which also uses position monitoring. This also applies if position monitoring is used in a different switch function.
  - Active position monitoring is deactivated if another parameter set is selected, which does not use this position monitoring.

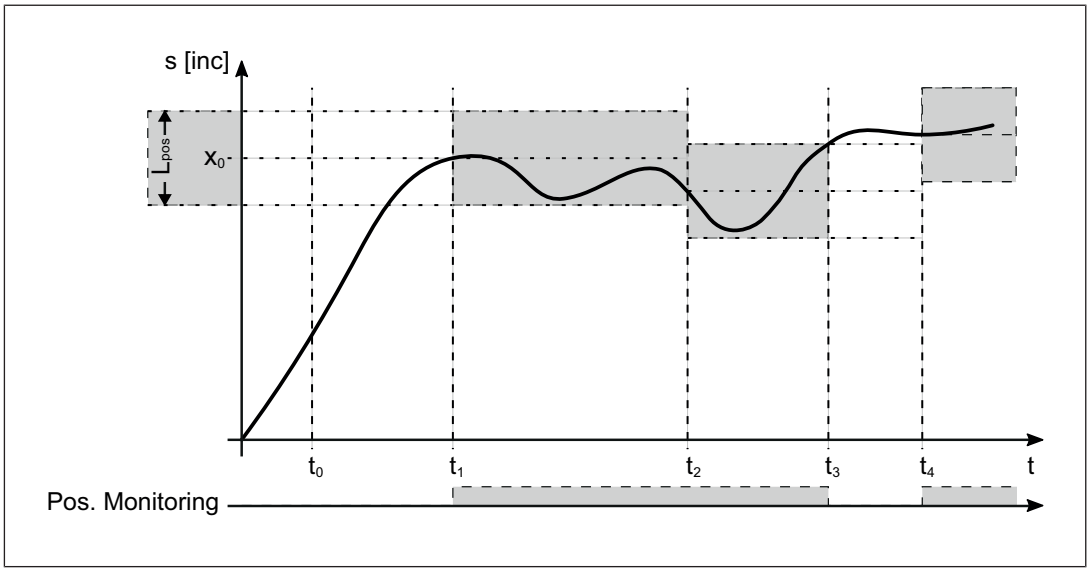

Fig.: Sequence of position monitoring with automatic start

Legend

x_0	Reference position
L_{pos}	Position window
t_0	Device on
t_1	Start of position monitoring by selecting a parameter set via the Select inputs
t_2	Position monitoring is restarted by selecting a different parameter set
t_3	Position leaves the position window, assigned outputs will switch off
t_4	Restart of position monitoring by rising edge at the start input (S34)

Please note:

- Position monitoring cannot be used if proximity switches are employed.
- Managing the start type of the outputs is independent of the start type of the position monitoring.

- In the event of an open circuit, position monitoring is automatically deactivated

4.3.5 Direction

If the direction is to be detected safely, this function must be linked to a safety contact.

- **Clockwise**

  If "Direct. Right" is configured, the safety output is switched on during normal operation in clockwise rotation.

- **Counter-clockwise**

  If "Direct. Left" is configured, the safety output is switched on during normal operation in anti-clockwise rotation.

- **Tolerance**

  For both directions, a tolerance can be entered for the wrong direction. This means that the drive may run in the incorrect direction until it reaches the set tolerance value without the assigned output switching off.
  A switched off output cannot switch on again until the drive has moved up to the tolerance value in the correct direction.
  The tolerance is also taken into account following an automatic reset.

- **Automatic reset**

  For both directions, a joint automatic reset can be configured.

  – If no automatic reset is configured, the direction monitoring is reset only by switching off the supply voltage.

  – When automatic reset is configured, the direction monitoring is reset when a parameter set is switched over.

Please note:

- Direction monitoring is always active, irrespective of whether it is used in the selected parameter set.
- Direct.Right and Direct.Left are active when the PNOZ s30 is started up.
- Direction cannot be detected if proximity switches are used.

Timing diagram for direction monitoring:

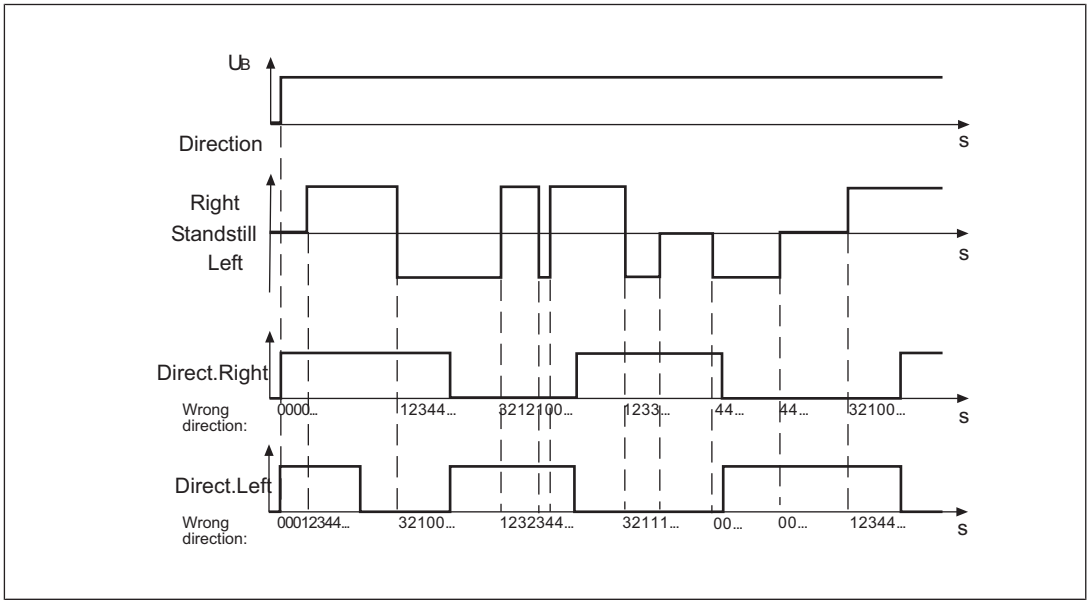

Configuration in the example:

- Wrong direction in anti-clockwise rotation
  Max. right: 3 pulses
- Wrong direction in clockwise rotation
  Max. left: 3 pulses

4.3.6 Monitoring for broken shearpins

An additional proximity switch or an HTL signal from an additional encoder can be connected to track Z to monitor for broken shearpins. These must both be configured as Z-frequency monitoring.

A monitoring function checks than the frequency difference on the tracks AB "f_{AB}" to track Z "f_Z" is less than 10%.

Please note:
The monitoring for broken shearpins will not become active until

- The minimum speed has been exceeded and
- The tolerance for detecting feasibility errors has elapsed.

The minimum speed and tolerance depend on the ratio of the frequency at tracks AB "f_{AB}" to the frequency at track Z "f_Z" in your configuration (***fAB/fZ Verh.*** setting in the menu).

Minimum speed:

- when ***fAB/fZ Verh.*** ≥ 1.0
  f_Z = 10 mHz or $f_{AB} = (f_{AB}/f_Z)\ x$ 10 mHz
- when f_{AB}/f_Z ***Verh.*** < 1.0
  f_{AB} = 10 mHz or $f_Z = 10\ mHz/(f_{AB}/f_z)$

Tolerance for detecting feasibility errors:

- when ***fAB/fZ Verh.*** ≥ 1.0
  7.5 Z-pulses or 7.5 x (f_{AB}/f_Z) AB-pulses

- when ***fAB/fZ Verh.*** < 1.0
  4.5 AB-pulses or *4.5/(f_{AB}/f_Z)* Z-pulses

4.3.7 Hysteresis

For each switch function F1 ... F9 (with the exception of direction and position), a hysteresis can be configured. This prevents the outputs on the speed monitor from bouncing if there are fluctuations around the response value. The hysteresis becomes effective when the output is switched on:
Switch-on value = switching threshold – hysteresis
For the lower range limit:
Switch-on value = switching threshold + hysteresis

4.3.8 Start types

You can choose between the following start modes:

- **Automatic start**

  If an automatic start is configured, the output switches on automatically if the speed does not reach the limit value, for example.

- **Monitored start with rising edge**

  If a monitored start with rising edge is configured, the output switches on if the speed does not reach the limit value and then a rising edge was detected at S34.

- **Monitored start with falling edge**

  If a monitored start with falling edge is configured, the output switches on if the speed does not reach the limit value and then a falling edge was detected at S34.

4.3.9 Start-up delay

A start-up delay time can be configured, which prevents the evaluation of the encoder signals for the configured time period after the supply voltage is switched on.

4.3.10 Synchronous start

Any outputs can be grouped using the "Synchronous start" option.

It is ensured that all the outputs of the group are switched off before an individual output of the group can be switched on again.

To switch an output of this group on, all the other start-up conditions of this output have to be met. The outputs of the group are switched on independently of each other.

Please note:

- For synchronous outputs, no switch-on delay must be configured (menu Output delay:Switch-on delay/switch-on and switch-off delay.

4.3.11 Switch delay

A delay time can be set for each output (see technical details). The outputs will not switch until the set time has elapsed. It is possible to configure whether the delay time is to be activated when switching on, switching off, or switching on and off.



WARNING!

Potential loss of safety function due to increased reaction time

The output switch-off delay (t_{do}, Off) when overspeed is reached will increase the speed monitor's reaction time by the stated value (see technical details). This must not delay the arrival of a safe condition by more than the permitted time. The configuration of the switch-off delay must be considered in the risk assessment as regards hazards, reaction time and safety distance.

The following delay types can be configured:

Switch-on delay retriggerable

After a rising edge (e.g speed is in the permitted range) the output will switch on only when the configured time has elapsed. When there is another rising edge during the delay time, the delay time is restarted.

Switch-off delay retriggerable

After a falling edge (e.g speed is exceeded) the output will switch off only when the configured time has elapsed. At a rising edge during the delay time, the time is reset without the output switching off.

Switch-on switch-off delay retriggerable

After a rising edge the output will switch on only when the configured time has elapsed. After a falling edge (e.g speed is exceeded) the output will switch off only when the configured time has elapsed. When there is another rising or falling edge during the delay time, the delay time is restarted.

Switch-off delay not retriggerable

After a falling edge (e.g speed is exceeded) the output will switch off only when the configured time has elapsed. A rising edge during the delay time has no effect. The output switches off when the time has elapsed.

4.3.12 Feedback loops

Feedback loops are used to monitor external contactors or relays. The corresponding feedback loop must be closed before starting.

4.3.13 Switching direction on semiconductor outputs

The semiconductor outputs can be operated in normally de-energised or normally energised mode.

4.3.14 Analogue output

The semiconductor output OUT 4 (Y35) can be configured as 0 – 20 mA or 4 – 20 mA analogue output (burden 0 … 500 Ohm).

The currently applied frequency is output as a current value that is proportional to the currently applied frequency. Here, the current value rises to the maximum value 20 mA. The relevant frequency f_{max} can be configured for this maximum value (see "Expanded settings" menu). When the maximum frequency is exceeded, the current value will continue to rise proportionally to approx. 22 mA, and then remains constant.

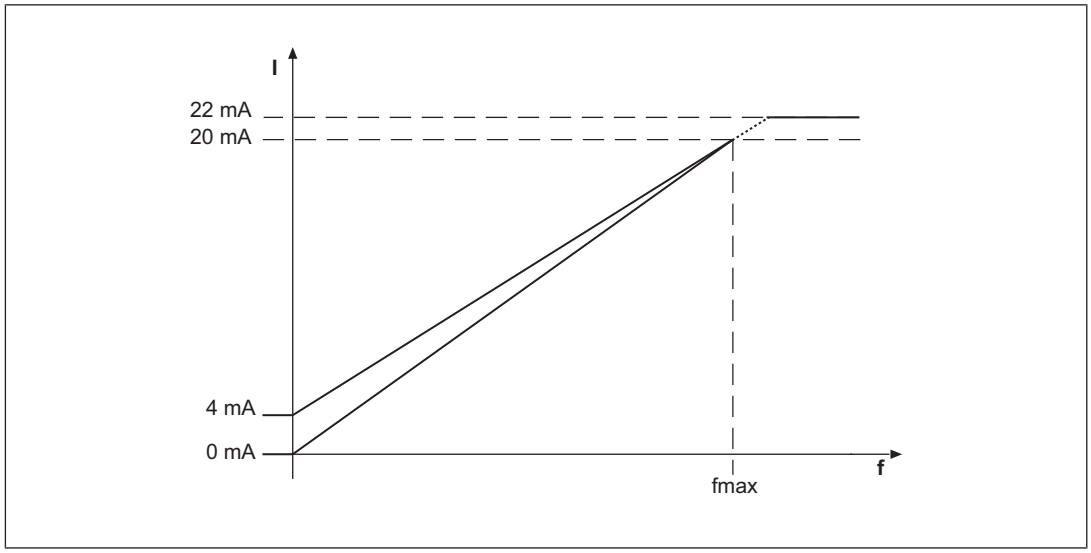

4.3.15 Units

The values to be configured can be entered in various units. Depending on the axis type (linear or rotational axis), various units can be selected for speed and distance (see chapter entitled "Menu overview").

4.3.16 Timing diagram for speed monitoring

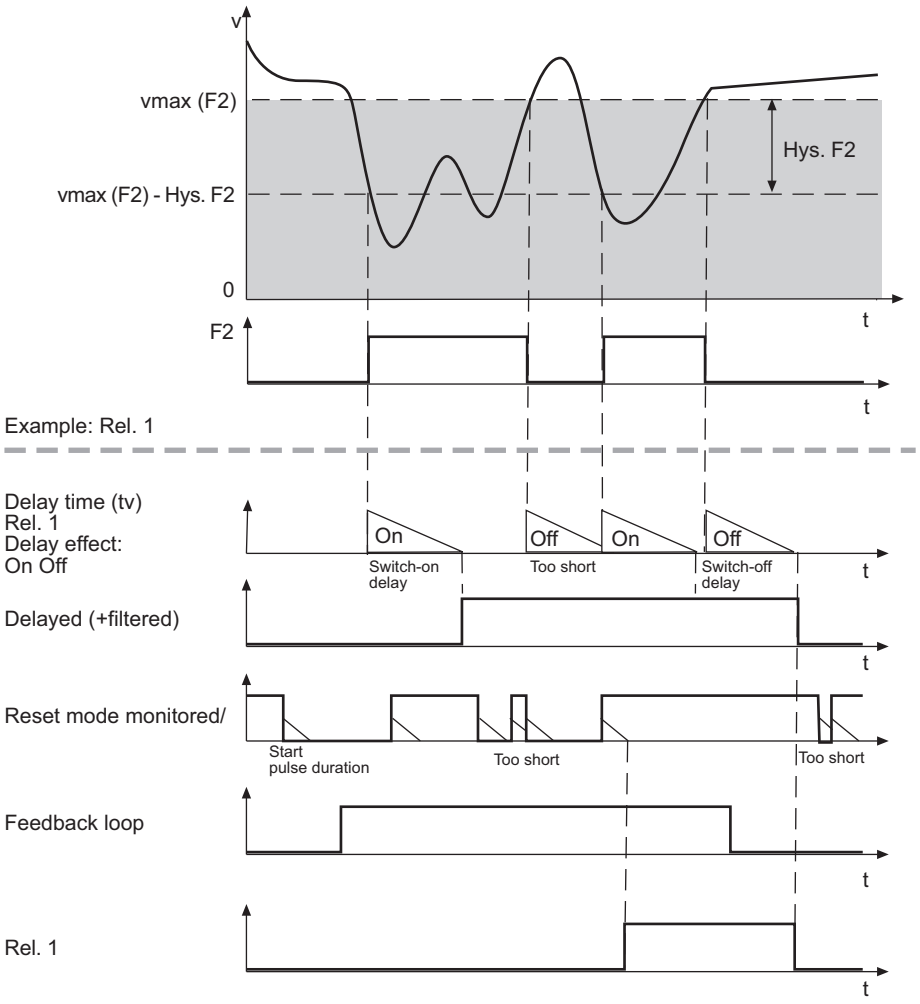

Configuration in the example:

- Switch function: F2
- Assigned output: Rel. 1
- Delay effect on outputs: On + Off
- Start type: Monitored /

4.4 Speed configuration

The speed monitor is configured using the rotary knob on the device.

To monitor e.g. various operating modes you can configure up to 16 parameter sets (P0 ... P15) with a max. of 9 switch functions (F1 ... F9) each.
One of the 16 parameter sets is selected via 4 select inputs SEL1 (Y10), SEL2 (Y11), SEL4 (Y12), SEL8 (Y13).

The switch functions are monitored simultaneously.
Each of a switch function's 16 parameters can be configured as

- Standstill limit
- Speed limit
- Upper or lower limit of speed range
- Right-hand direction monitoring
- Left-hand direction monitoring
- Position monitoring 1 to 4 with width of position window 1 to 4
- Static value "On" or "Off"

Each output can be assigned a switch function or an area. The results of the switch functions can also be linked together logically. A switch function can be assigned to several outputs. A switch delay [22], the start type [21] and Synchronous start [21] can be configured for each output.

If only one parameter set is used, configure the mode "Select inputs: None". The select inputs will then be ignored.



INFORMATION

2 basic configurations are available for standard applications, for simple configuration within the display menu. A basic configuration contains limited menu functions adapted for standard applications, with partly pre-defined parameters. Further information about basic configurations can be found in this chapter, under "Basic configuration".

Example configuration:

2 parameter sets for 2 operating modes are configured:

- Set-up: P1
- Automatic mode: P2

The parameter set P1 is used to monitor a reduced speed.

The parameter set P2, "Automatic mode", is selected for speed monitoring (selection via the select inputs, see next chapter "Select inputs").

The following switch functions are configured for the parameter set P1:

- F1: Standstill 2 Hz
- F2: Overspeed: 50 Hz
- F3: Warning threshold: 50 Hz

The following switch functions are configured for the parameter set P2:

- F1: Standstill 2 Hz
- F2: Overspeed: 3000 Hz
- F3: Warning threshold: 2800 Hz

The following outputs are assigned to the switch functions:

- F1: Relay output Rel. 1
- F2: Relay output Rel. 2
- F3: Semiconductor output Out 1

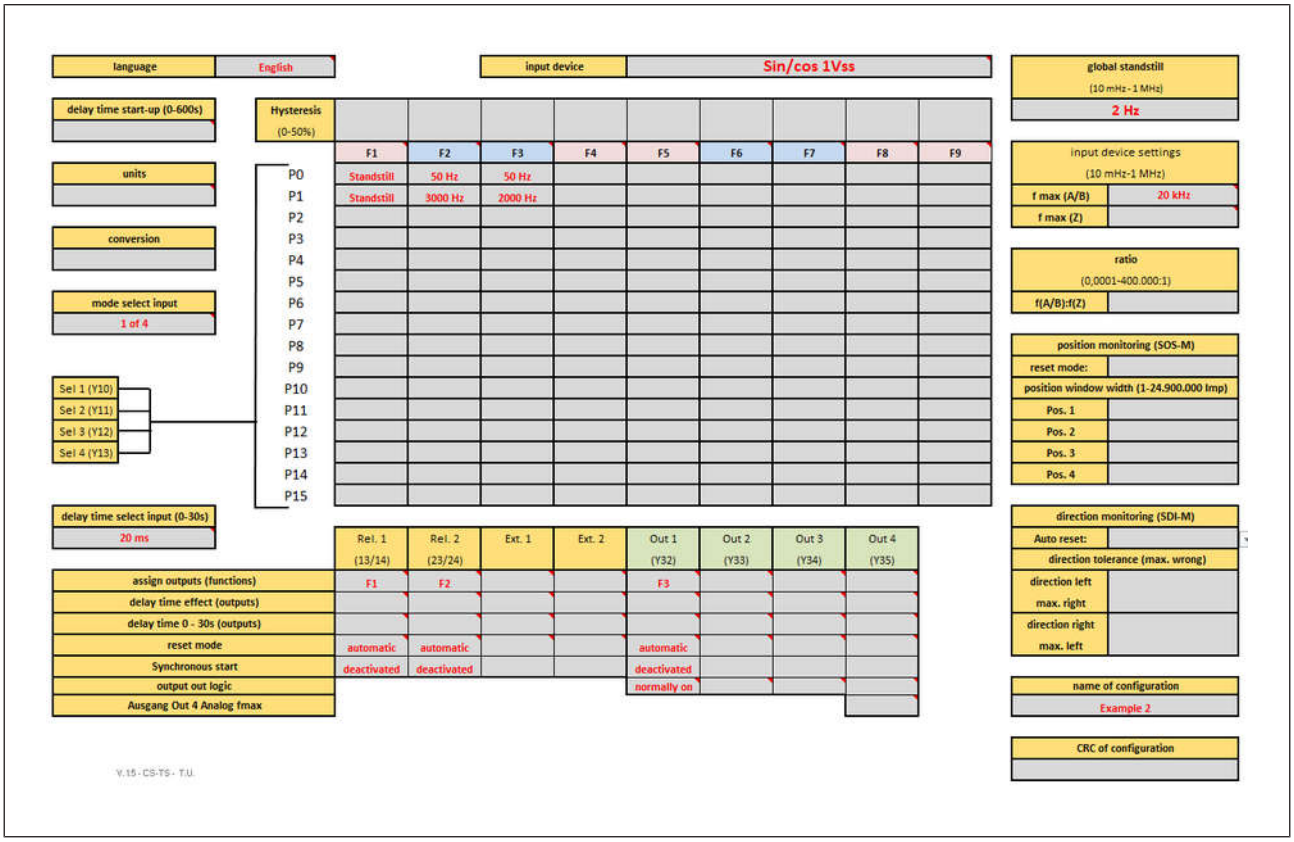

For documentation and a better overview of the device settings, we recommend that you fill in this configuration overview before setting the device parameters (link to form, see "Create configuration overview" chapter).

From device version 2.2 you have the opportunity to create the settings with the software-tool from Pilz (see Create configuration in PNOZsigma Configurator [📖 72]).

4.4.1 Select Inputs

The parameter sets are selected via the 4 select inputs SEL1 (Y10), SEL2 (Y11), SEL4 (Y12), SEL8 (Y13). Only one of the configured parameter sets can be selected.

One of the following modes can be selected in the "Select inputs mode" menu, depending on the application:

"None" mode

For applications up to PL e of EN ISO 13849-1 and SIL CL 3 of EN IEC 62061.

The select inputs are ignored. Only the parameter set P0 is configured and used. The lowest frequency (10 mHz) is automatically set for all other parameter sets.

"1 from 4" mode

For applications up to PL e of EN ISO 13849-1 and SIL CL 3 of EN IEC 62061.

A maximum of 4 parameter sets can be configured and used: P1, P2, P4 and P8.

Parameter set	**Signal states of the select inputs**			
	SEL 8 (Y13)	SEL 4 (Y12)	SEL 2 (Y11)	SEL 1 (Y10)
P1	0	0	0	1
P2	0	0	1	0
P4	0	1	0	0
P8	1	0	0	0

When using these 4 parameter sets, the following safety features are met:

If there is an error when activating the select inputs, such as

- Short circuits and shorts between contacts
- Open circuit
- Drift in the inputs

This may mean that a parameter set other than P1, P2, P4 or P8 is selected. An error message appears and all the outputs switch off.

"All 16" mode

In this mode, the number of parameter sets can be increased to max. 16. This mode can only be used for applications up to max. PL d of EN ISO 13849-1 and up to SIL CL 2 of EN IEC 62061.

Parameter set	Signal states of the select inputs			
	SEL 8 (Y13)	SEL 4 (Y12)	SEL 2 (Y11)	SEL 1 (Y10)
P0	0	0	0	0
P1	0	0	0	1
P2	0	0	1	0
P3	0	0	1	1
P4	0	1	0	0
P5	0	1	0	1
P6	0	1	1	0
P7	0	1	1	1
P8	1	0	0	0
P9	1	0	0	1
P10	1	0	1	0
P11	1	0	1	1
P12	1	1	0	0
P13	1	1	0	1
P14	1	1	1	0
P15	1	1	1	1

When the expanded parameter sets are used, please note the following:
An open circuit when actuating the select inputs leads to switching to a parameter set with a lower number (e.g. P7 -> P3 with open circuit at SEL4).
Limit values for the switch functions should therefore be entered in ascending order (parameter set P0 -> lowest values, parameter set P15 -> highest values).

Delay on the select inputs
A reaction time can be entered for the select inputs. That way it is possible to filter out invalid signals (e.g. contact bounce or an intermediate state) that occur when switching. The new parameter set will be activated only when the delay time has elapsed.

4.4.2 Switch functions

The following switch functions are available:

- **Standstill**

  The standstill frequency is configured centrally. The standstill frequency should be the lowest frequency in the configuration.

  All switch function parameters are pre-configured to the lowest frequency in the factory setting.

- **Speed**

  Limit values can be configured to monitor for overspeed.

  Limit values should be entered in ascending order (Parameter set P0 -> lowest values, parameter set P15 -> highest values)

- **Speed range**

  Up to 4 speed ranges can be monitored simultaneously.

  Configure two switch functions (speeds) to monitor a range:

  – F2 and F3,

  – F4 and F5,

  – F6 and F7 or

  – F8 and F9.

  The switch function with the lower number (e.g. F2) operates as the lower range limit; the switch function with the higher number (e.g. F3) operates as the upper range limit.

  Both switch functions can be assigned to one or more outputs.

- **Position**

  Up to 4 different position windows can be monitored: Position 1 ... Position 4.

  Each position to be monitored can be entered as often as necessary in parameter sets P0 to P15 and switch functions F1 to F9.

- **Direction**

  The monitoring functions "Direct. Left" and "Direct. Right" can be configured as a switch function as often as necessary.

  For both directions, a tolerance can be entered for the wrong direction.

- **Static value "On" or "Off"**

  The static value "On" or "Off" can be configured as a switch function instead of a monitoring function. The assigned outputs are then switched on and/or off.

  The static value "On" and "Off" can be configured as a switch function as often as necessary.

- **Logic operations**

  The results of the switch functions F1 … F9 and the area operations F2-F3 … F8-F9 can be linked together logically (AND, OR). The following operations can be assigned:

  F2 AND F3 (F2 ∧ F3)

  F4 AND F5 (F4 ∧ F5)

  F1 AND F6-F7 (F1 ∧ F6-F7)

  F1 AND F8-F9 (F1 ∧ F8-F9)

  F6 OR F7 (F6 ∨ F7)

  F8 OR F9 (F8 ∨ F9)

  F1 OR F2-F3 (F1 ∨ F2-F3)

  F1 OR F4-F5 (F1 ∨ F4-F5)

- **Analogue output**

  The semiconductor output OUT 4 (Y35) can be configured as 0 – 20 mA or 4 – 20 mA analogue output.

- **Error output**

  Every output can be configured as an error output.

  Error: Output switched off

  No error: Output switched on

- **Output OFF**

  Every output can be switched off permanently

Overview output assignments

Every assignment has a unique number.
The assignment options are available:

No.	On the display	Description	
0	Off		
1	F1	Individual switch functions	
…			
9	F9		
10	F2 - F3	Speed range	
11	F4 - F5		
12	F6 - F7		
13	F8 - F9		
14	Err	Error output	
15	F2 ∧ F3	F2 AND F3	Logic operations
16	F4 ∧ F5	F4 AND F5	
17	F1 ∧ F6-F7	F1 AND F6-F7	
18	F1 ∧ F8-F9	F1 AND F8-F9	
19	F6 ∨ F7	F6 OR F7	
20	F8 ∨ F9	F8 OR F9	
21	F1 ∨ F2-F3	F1 OR F2-F3	
22	F1 ∨ F4-F5	F1 OR F4-F5	
23	0 – 20 mA Ana-logue	Analogue output	
24	4 – 20 mA Ana-logue		

4.4.3 Basic configuration

Two basic configurations are available for standard applications, for simple configuration within the display menu. A basic configuration contains limited menu functions adapted for standard applications, with partly pre-defined parameters.

The following basic configurations are available:

Basic configuration 1: Ini pnp pnp (proximity switch)

Pre-defined settings and configuration options:

- **Encoder type**

  2 pnp type proximity switches
- **Switch functions**
  - **Standstill (F1)**

    Standstill frequency configurable in Hz
    Default: 2 Hz
  - **Speed (F2)**

    Max. frequency (v max) configurable in Hz
    Default: 500 Hz
- **Parameter set/select input**

  P0, select inputs are ignored ("None" mode")
- **Hysteresis**

  Standstill and speed, 2 % each
- **Output assignment**
  - Standstill (F1): Relay output Rel. 1 and semiconductor output Out 1
  - Speed (F2): Relay output Rel. 2 and semiconductor output Out 2
- **Start mode**
  - Rel. 1, Rel. 2 Out 1, Out 2: Automatic start
- **Switch delay**

  None
- **Max. encoder frequency**

  3.5 kHz

Basic configuration 2: Encoder

- **Encoder type**

  Encoder
  - Encoder type configurable
- **Switch functions**
  - **Standstill (F1)**

    Standstill frequency configurable in Hz
    Default: 100 Hz
  - **Speed (F2)**

    Max. frequency (v max) configurable in Hz
    Default: 5 kHz

- **Direction (F3)**

  Left direction
  Tolerance for wrong direction = 10 pulses

- **Direction (F4)**

  Right direction
  Tolerance for wrong direction = 10 pulses

- **Parameter set/select input**

  P0, select inputs are ignored ("None" mode")

- **Hysteresis**

  Standstill and speed, 2 % each

- **Output assignment**
  - Standstill (F1): Relay output Rel. 1 and semiconductor output Out 1
  - Speed (F2): Relay output Rel. 2 and semiconductor output Out 2
  - Left direction (F1-F4): External output Ext. 1 and semiconductor output Out 3
  - Right direction (F1-F4): External output Ext. 2 and semiconductor output Out 4
- **Start mode**
  - All outputs: Automatic start
- **Switch delay**

  None
- **Max. encoder frequency**

  1 MHz

For details of how to configure the basic configurations, see the chapter entitled Commissioning/Display Menu - Configuration

4.4.4 Chip card

The set parameters, the name of the configuration, the check sum and the passwords are stored on the chip card. The error list can also be saved to the chip card. (See chapter "Use chip card").

4.5 Input device types

4.5.1 Proximity switch

- The following proximity switches can be used:
  - pnp
  - npn
- The proximity switches must be fitted so that at least one is always activated. In other words, the proximity switches must be fitted so that the recorded signals always overlap.
- The cable used to connect the proximity switches must be shielded (see connection diagrams in the chapter entitled "EMC-compliant wiring").
- The supply voltage of the proximity switches should be monitored via track S.

Proximity switch assembly:

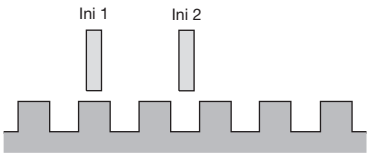

Example pnp – pnp:

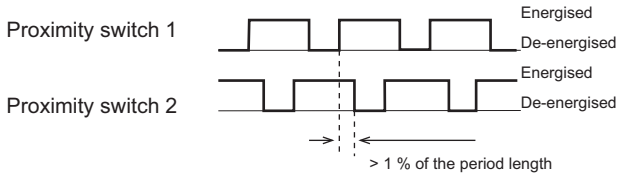

CAUTION!

Appropriate installation measures should be taken to prevent a foreign body coming between the signal encoder and the proximity switch. If not, the foreign body could cause invalid signals.

- Please note the values stated in the technical details
- The maximum frequency of the used encoders must be entered for a complete configuration ("Encoder" Menu -> "Track AB" -> "Track AB fmax" / "Track Z" -> "Track Z fmax").

4.5.2 Rotary encoders

- The following encoders can be used:
  - TTL, HTL (single-ended or differential signals)
  - sin/cos 1 Vss
  - Hiperface
- The encoders can be connected with or without Z index (0 index)
- The cable used to connect the encoders must be shielded (see connection diagrams in the chapter entitled "EMC-compliant wiring").
- A proximity switch can also be connected to track Z for monitoring broken shearpins
- Track S can be used:
  - To connect an encoder's error output
  - To monitor voltages between 0 V and 30 V for a permitted upper and lower limit. For example, the encoder's supply voltage can be monitored.

- The following must be entered for a complete configuration
  - The maximum frequency of the used encoders ("Encoder Settings" menu -> "Track AB" -> "Track AB fmax" / "Track Z" -> "Track Z fmax").
  - When monitoring broken shearpins: The ratio fAB/fZ ("Encoder Settings" menu -> "Track Z" -> fAB/fZ Verh.)

Please note the values stated in the technical details

4.5.2.1 Output signals

Output signals TTL, HTL

- Single ended

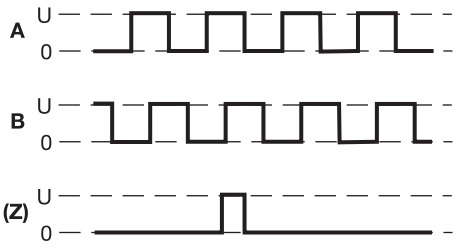

- Differential

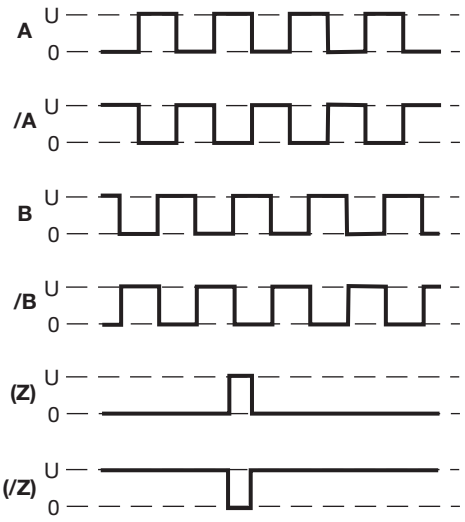

Output signals Sin/Cos (1 Vss)

- Single ended with reference track (e.g. Hiperface ®)

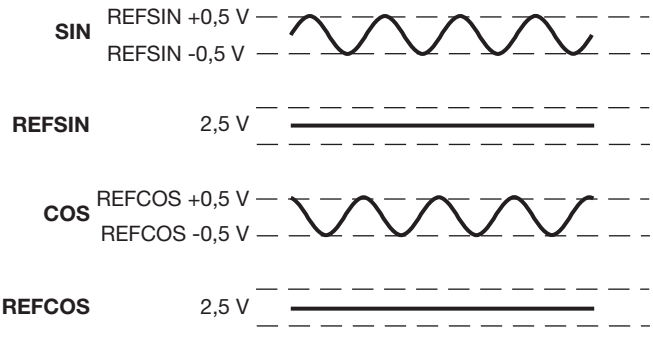

- Differential with/without Z index (e.g. Heidenhain 1 Vss)

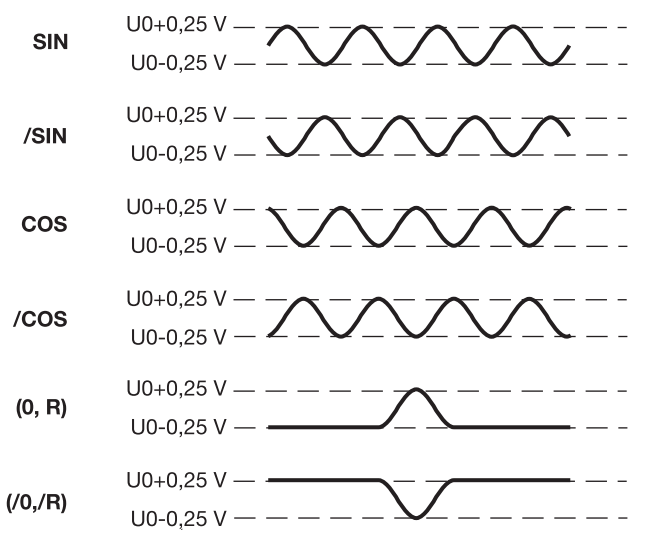

4.5.2.2 Adapter for incremental encoders

The adapter records the data between the encoder and the drive and makes it available to the PNOZ s30 via the RJ45 socket.

Pilz supplies complete adapters as well as ready-made cable with RJ45 connector, which can be used when making your own adapter. The range of products in this area is constantly being expanded. Please contact us about the range of adapters that is currently available.

5 Installation

5.1 General installation guidelines

Install base unit without contact expansion module:

- Ensure that the plug terminator is inserted at the side of the unit.

Connect base unit and PNOZsigma contact expansion module:

- Remove the plug terminator at the side of the base unit and at the contact expander module.
- Connect the base unit and the contact expander module to the supplied connector before mounting the units to the DIN rail.

Control cabinet installation

- The unit should be installed in a control cabinet with a protection type of at least IP54.
- It is preferable to install the device on a horizontal DIN rail in order to ensure the best possible convection.
- Use the notch on the rear of the unit to attach it to the DIN rail.
- Push the device upwards or downwards before lifting it from the DIN rail.

NOTICE

Damage due to electrostatic discharge!

Electrostatic discharge can damage components. Ensure against discharge before touching the product, e.g. by touching an earthed, conductive surface or by wearing an earthed armband.

5.1.1 Dimensions

*with spring-loaded terminals

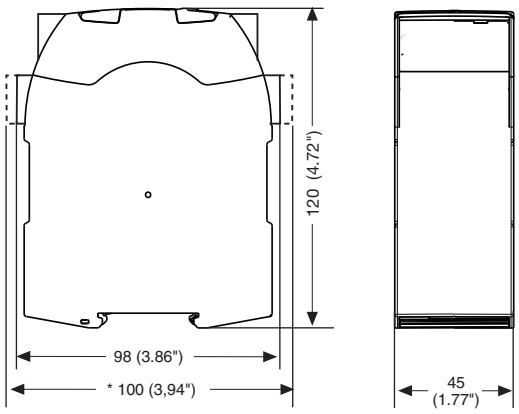

6 Wiring

6.1 General wiring guidelines

Please note:

- Information given in the Technical details [84] must be followed.
- Use copper wiring with a temperature stability of 75 °C.
- The cable used to connect the encoders and proximity switches must be shielded (see connection diagrams in the chapter entitled "EMC-compliant wiring").
- The shield may only be connected to earth at a single point.
- Earth loops should be avoided.
- If possible, the connections for the various earth potentials (GND, S21, Y30, A2) should not be connected on the PNOZ s30 but should be connected directly to the GNDs on the connected units. otherwise noise susceptibility may be increased significantly (conductor loops are not permitted).
- The cable at the analogue output must be shielded.

6.2 Pin assignment of RJ45 socket

RJ45 socket 8-pin	PIN	Track
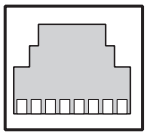	1	S
	2	GND
	3	Z
	4	A
	5	/A
	6	/Z
	7	B
	8	/B

6.3 Supply voltage

Supply voltage	AC	DC
	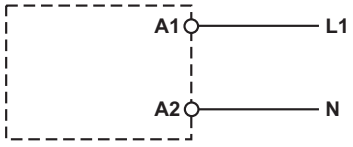	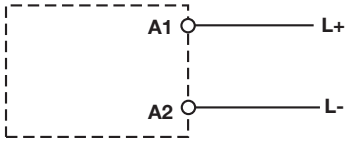

6.4 Connection of proximity switches

The following proximity switch combinations can be connected:

- A: pnp, B: pnp
- A: npn, B: npn
- A: pnp, B: npn
- A: npn, B: pnp

When connecting proximity switches please note:

- Proximity switches can either be connected to terminals In1, In2 and GND or to tracks A and B plus GND on the RJ45 socket.
- Track S should be used to monitor the supply voltage (see drawing). A permitted voltage range can be entered in the menu.
- Connect the proximity switch to 24 VDC of the power supply.
- When connecting the proximity switches, please refer to the chapter entitled "EMC-compliant wiring"
- Invalid signals may occur with cable lengths >50 m. In this case we recommend that you connect a resistor between the signal lines, as shown in the diagrams.

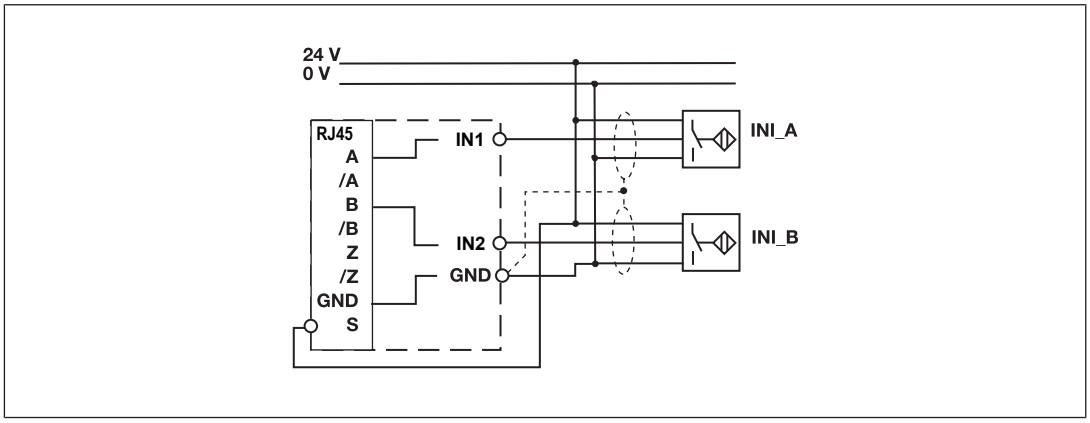

pnp proximity switch with resistor R = 10 kOhm

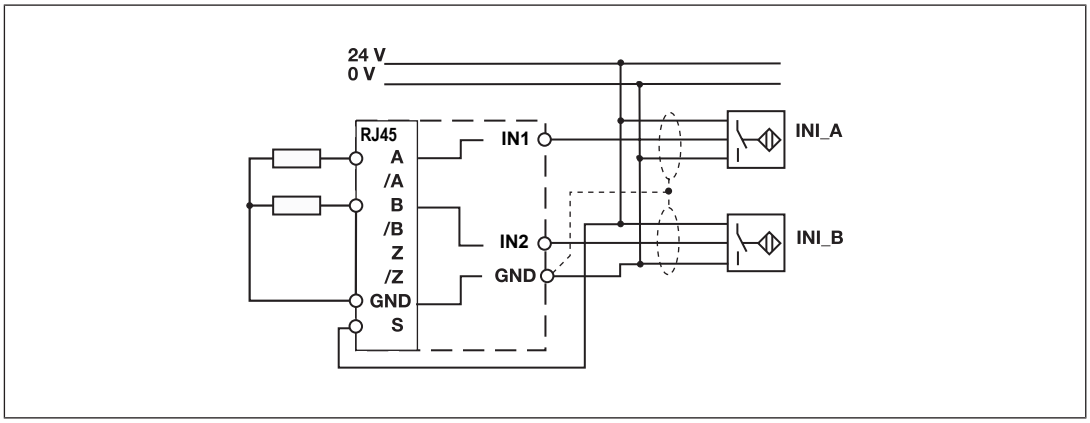

npn proximity switch with resistor R = 47 kOhm

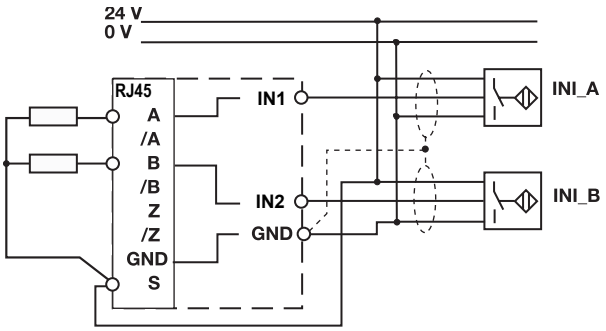

6.5 Connection of a rotary encoder

Proceed as follows when connecting the encoder:

- The encoder can be connected via an adapter (e.g. PNOZ msi6p) or directly to the PNOZ s30.
- Use only shielded cables for all connections. Please refer to the chapter entitled "EMC-compliant wiring".
- Always connect GND on the encoder to GND on the RJ45 connector.

INFORMATION

The following diagrams are principle connection diagrams. For better clarity, the shielding and supply voltage are not shown.

6.5.1 Connect rotary encoder to speed monitor

Encoder types:

- TTL single ended
- HTL single ended

Please note:

- Tracks/A, /B, Z and /Z must remain free

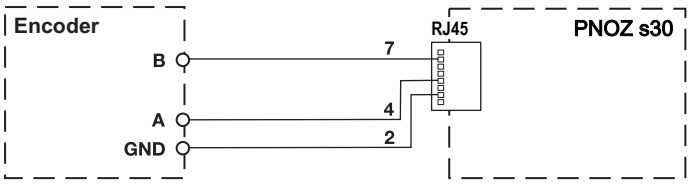

Encoder types:

- TTL Differential
- HTL differential
- sin/cos 1 Vss
- Hiperface

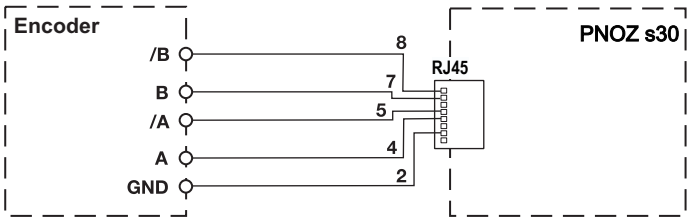

6.5.2 Connect rotary encoder with Z index to speed monitor

Encoder types:

- TTL single ended Z Index
- HTL single ended Z Index

Please note:

- Tracks /A, /B and /Z must remain free

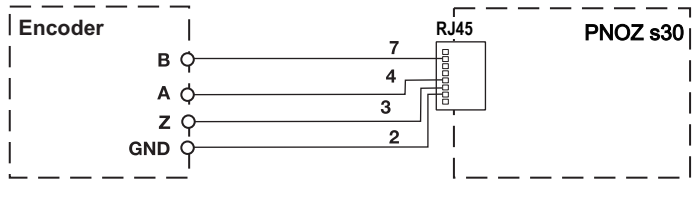

Encoder types:

- TTL differential + Z Index
- HTL differential + Z Index
- sin/cos 1 Vss Z Index

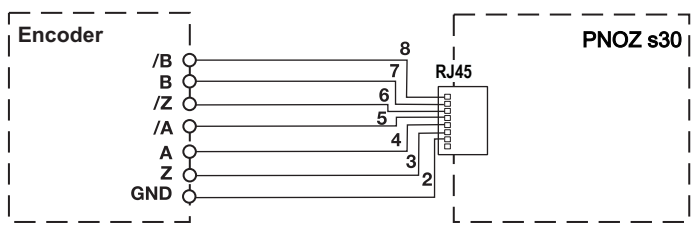

6.5.3 Connect rotary encoder to the speed monitor via an adapter

The adapter (see Accessories) is connected between the encoder and the drive. The output on the adapter is connected to the RJ45 socket on the PNOZ s30.

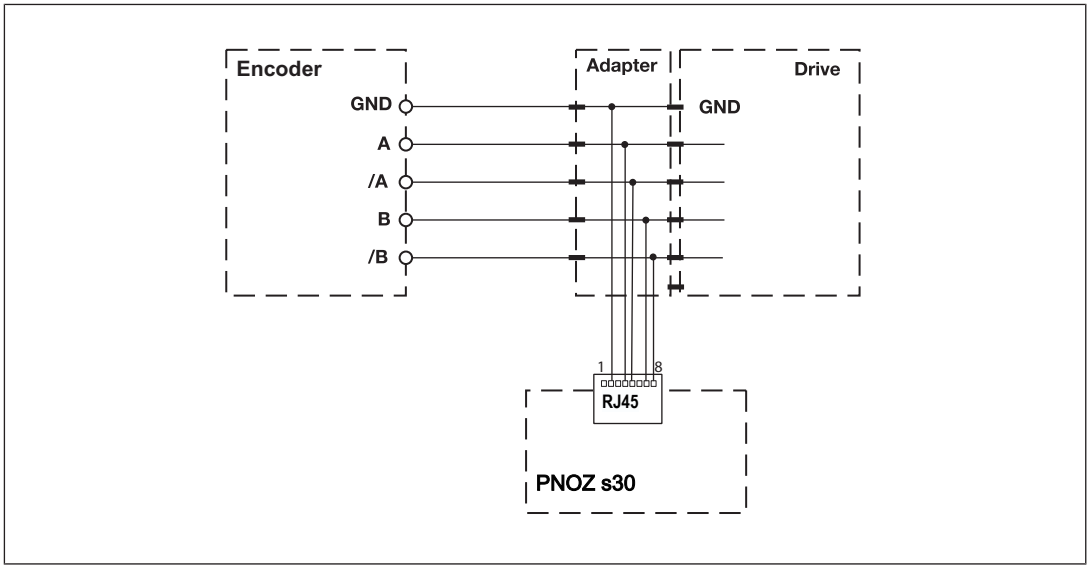

6.6 Connection of proximity switch and rotary encoder

When connecting the encoders and proximity switches, please refer to the chapter entitled "EMC-compliant wiring".

INFORMATION

The following diagrams are principle connection diagrams. For better clarity, the shielding and supply voltage are not shown.

Sensor types:

- Configuration: HTL single Z Freq. Ini pnp
  - HTL single ended (A,B) + Ini pnp (Z)
  - HTL single ended (A,B) + HTL differential (A as Z)
  - HTL single ended (A,B) + HTL single ended (A as Z)
- Configuration: TTL single Z Freq. Ini pnp
  - TTL single ended (A,B) + Ini pnp (Z)
  - TTL single ended (A,B) + HTL differential (A as Z)
  - TTL single ended (A,B) + HTL single ended (A as Z)

Please note:
Tracks /A, /B and /Z must remain free.

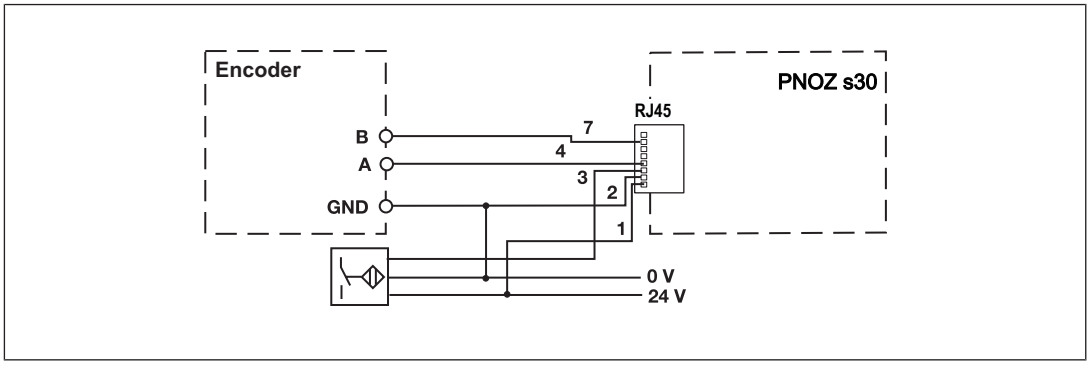

Sensor types:

- Configuration: TTL differential Z Freq. Ini pnp
  - TTL differential (A,/A,B,/B) + Ini pnp (Z)
  - TTL differential (A,/A,B,/B) + HTL differential (A as Z)
  - TTL differential (A,/A,B,/B) + HTL single ended (A as Z)
- Configuration: HTL differential Z Freq. Ini pnp
  - HTL differential (A,/A,B,/B) + Ini pnp (Z)
  - HTL differential (A,/A,B,/B) + HTL differential (A as Z)
  - HTL differential (A,/A,B,/B) + HTL single ended (A as Z)
- Configuration: sin/cos 1 Vss Z Freq. Ini pnp
  - sin/cos 1 Vss (A,/A,B,/B) + Ini pnp (Z)
  - sin/cos 1 Vss (A,/A,B,/B) + HTL differential (A as Z)
  - sin/cos 1 Vss (A,/A,B,/B) + HTL single ended (A as Z)
- Configuration: Hiperface Z Freq. Ini pnp
  - Hiperface (A,/A,B,/B) + Ini pnp (Z)
  - Hiperface (A,/A,B,/B) + HTL differential (A as Z)
  - Hiperface (A,/A,B,/B) + HTL single ended (A as Z)

Please note:
Track /Z must remain free!!

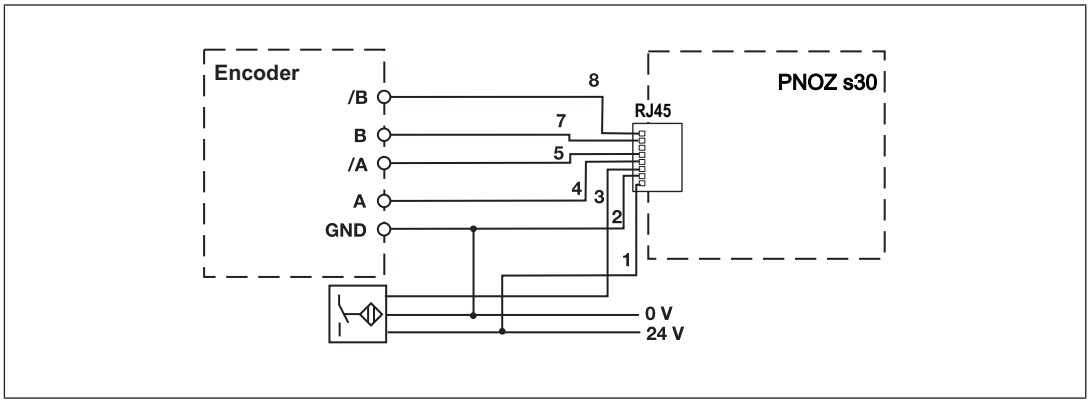

6.7 Reset circuit

Automatic start	Monitored start
automatic start must only be configured No wiring necessary!	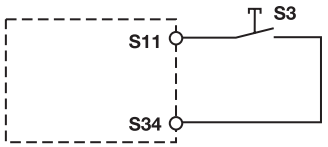

NOTICE

With automatic start

The unit starts up automatically when the safeguard is reset, e.g. when the E-STOP pushbutton is released. Use external circuit measures to prevent an unexpected restart.

6.8 Feedback circuit

No feedback loop monitoring	Contacts from external contactors
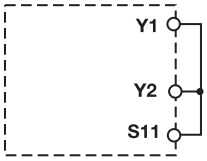	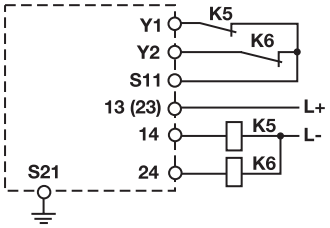

Please note:
When using the feedback loop, the cable run at S34, Y1, Y2 and S11 may be max. 30 m. For greater cable runs, shielded cables with earthing at either end must be used.

6.9 Select inputs

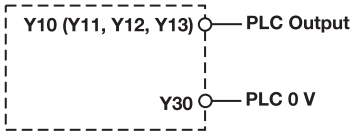

6.10 Semiconductor outputs

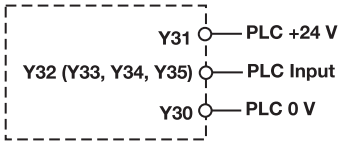

6.11 Analogue output

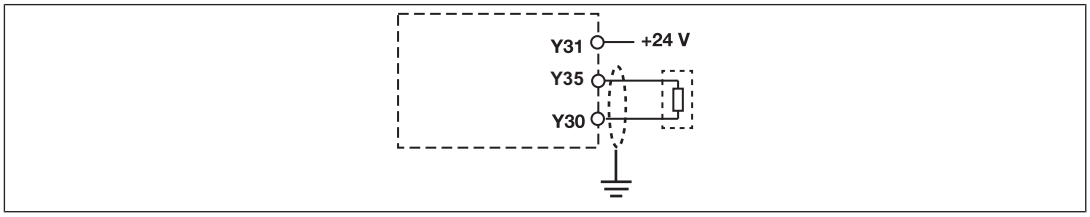

6.12 EMC-compliant wiring

EMC-compliant wiring for connecting an encoder

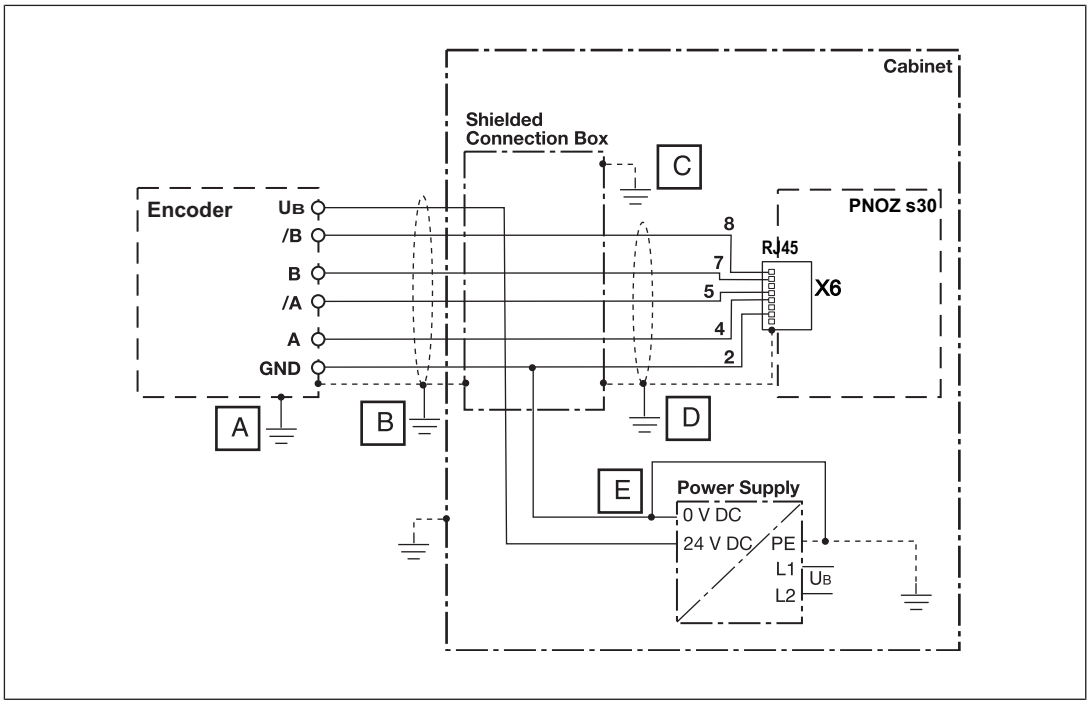

To avoid EMC interference we recommend that the shield on the sensor cables or the housing of the shielded junction box is only connected to earth at a single point:
A **or** B **or** C **or** D **or** E
Conductor loops outside the shield must be avoided.
If a shielded junction box is not used, the shield must run continuously from the sensor to the evaluation device.

EMC-compliant wiring for connecting an encoder with drive

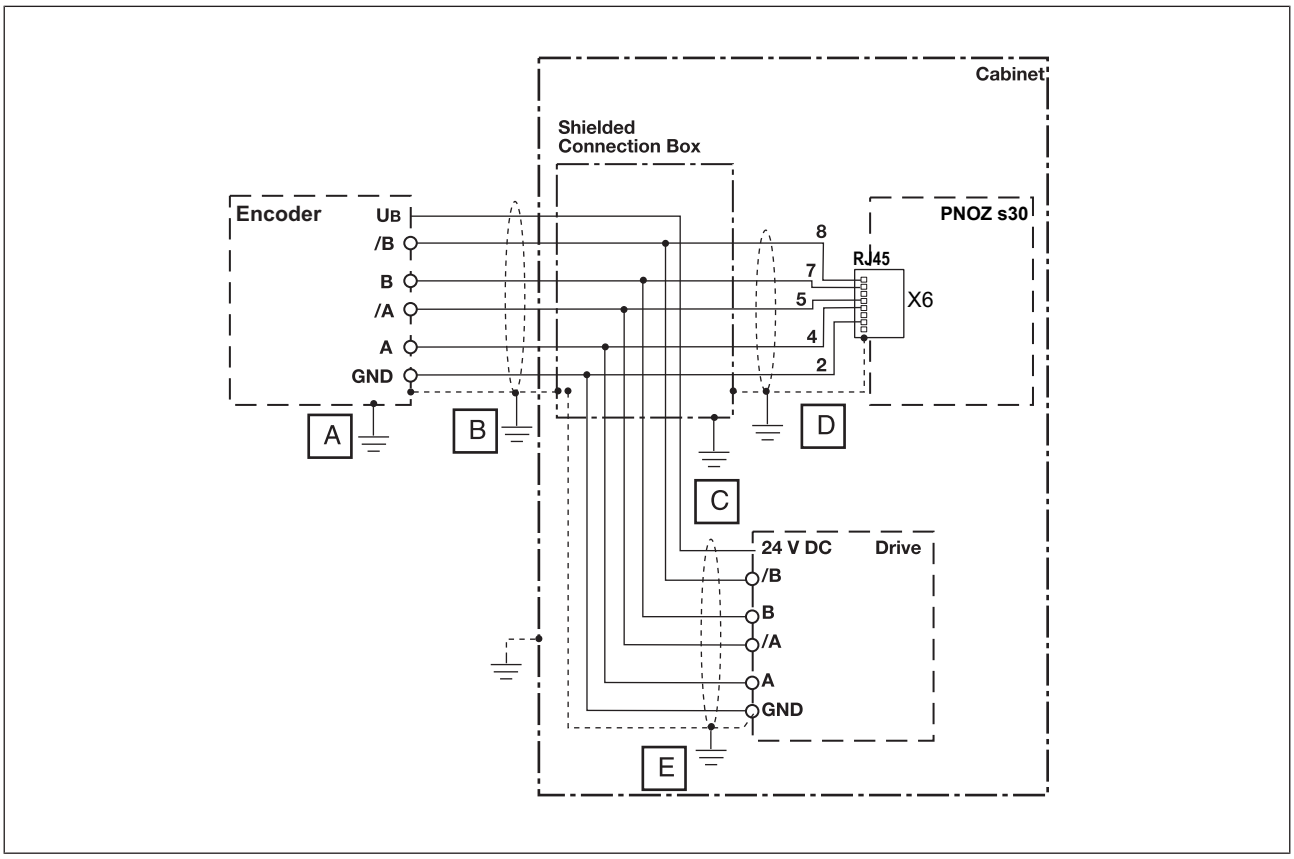

To avoid EMC interference we recommend that the shield on the sensor cables or the housing of the shielded junction box is only connected to earth at a single point:
A **or** B **or** C **or** D **or** E
Conductor loops outside the shield must be avoided.
If a shielded junction box is not used, the shield must run continuously from the sensor to the evaluation device.

EMC-compliant wiring for connecting 2 proximity switches

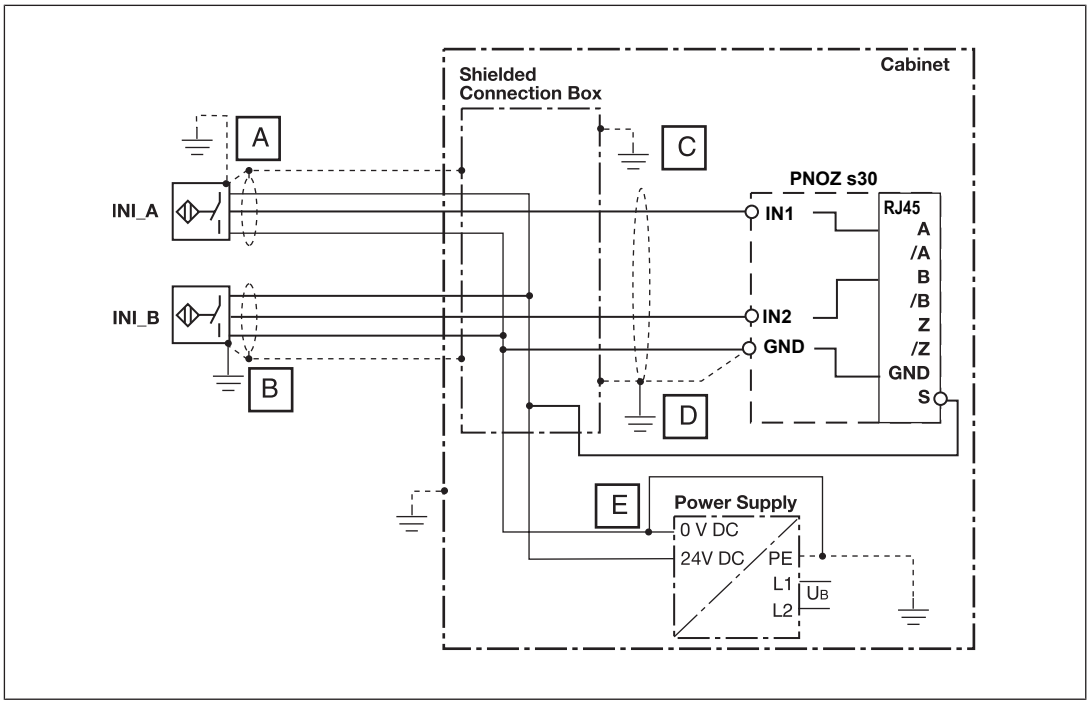

To avoid EMC interference we recommend that the shield on the sensor cables or the housing of the shielded junction box is only connected to earth at a single point:
A **or** B **or** C **or** D **or** E
Conductor loops outside the shield must be avoided.
If a shielded junction box is not used, the shield must run continuously from the sensor to the evaluation device.

7 Display menu - Configuration

The menu settings are made on the unit's display via a rotary knob. You have the option to make the settings on the knob by hand or with a screwdriver. If you make the settings with a screwdriver, the knob can remain within the unit.

From device version 2.2 you have the opportunity to create the settings with the software-tool from Pilz (see Create configuration in PNOZsigma Configurator [📖 72]).

7.1 Create configuration overview

For a better overview, before entering the configuration values we recommend that they are entered in the attached form *PNOZ_s30_Config_Overview*:

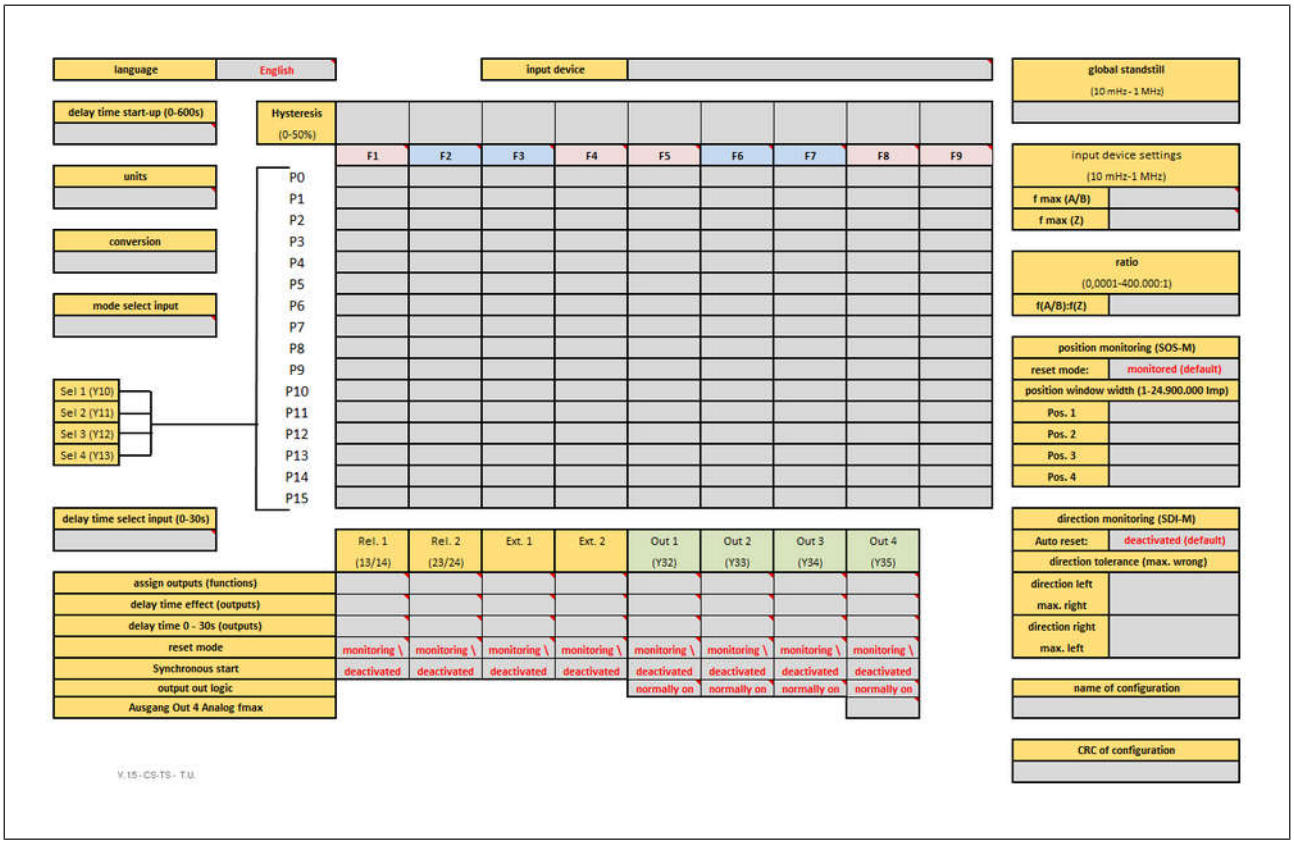

7.2 Operate rotary knob

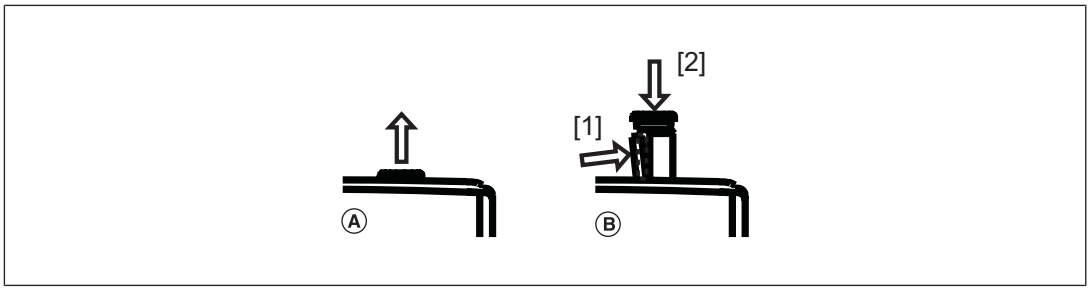

Knob :

- (A) pull out until it locks into position

- (B) release and push it back into the unit:
  - Press the bar on the side of the knob [1] towards the centre of the knob. This releases the knob.
  - Press the knob downwards [2] while keeping the bar pressed in

7.3 Configure Speed Monitor

The settings are made via the rotary knob, as follows:



Press knob

- Confirm selection/setting
- Switch to menu



Rotate knob

- Select menu level
- Set the parameter/numeric value

The speed with which you turn the knob affects the sequence of the menu and numeric values:

- Slowly: Units
- Quickly: Tens
- Very quickly:
  - Setting the numeric value: Hundreds
  - When switching the menu level: Jump to **ESCAPE**



NOTICE

Please note that all parameters are set to their default values on delivery.

Please check all the safety-related parameters at least, and enter the values that correspond to your application.



INFORMATION

If no value is set or amended within 30 s of a menu action, the display reverts to the default display. The current setting remains unchanged.
If the master password has been entered, this time increases to 5 minutes.

7.4 Password protection

The configuration is protected through passwords. There is a master password and a customer password.

Factory setting for both passwords: 0000

The password levels contain different authorisations:

- **Master password**

  Display: All settings
  Edit: All settings

- **Customer password**

  Display: All settings
  Edit:

  – The customer password can be changed.
  – The language can be changed.
  – The settings can be reset to the factory settings.

- **No password**

  Edit:

  – The language can be changed.
  – The settings can be reset to the factory settings.

If the settings are reset to the factory settings, the passwords and the language will also be reset to the factory settings.

The passwords can be changed at any time in the menu.
Enter a 4-figure password.

7.5 Use chip card

The parameters that are set on a unit can be stored on the chip card. The data is stored along with a device identifier, the passwords, the name of the configuration and the check sum. We recommend that you **always** operate the unit with a chip card.

- If the parameters on a device have been changed due to an error, they can be restored using the backup copy on the chip card.
- If a unit requires maintenance or needs to be exchanged, the chip card can be used to download the parameters to another unit.



INFORMATION

If you operate the unit without a chip card, the "Fault" LED will light and the following message will appear once only: **Please Insert SIM Card!**. If you change the parameters, the **Please Insert SIM Card!** message will re-appear.
The message disappears after 30 s or by pressing the rotary knob.

When the chip card is inside the unit:

- The chip card is checked to verify the device identifier, valid parameters, and ensure that the data is identical.
- Unit parameters are automatically saved to the chip card during operation. As a result, the chip card always contains a copy of the unit's current internal data. Exception: If you select **Write configuration to SIM: No**.

7.5.1 Insert chip card

NOTICE

The chip card contact is only guaranteed if the contact surface is clean and undamaged. For this reason please protect the chip card's contact surface from

- Contamination
- Contact
- Mechanical impact, such as scratches.

Make sure that you do not bend the chip card as you insert it into the chip card slot.

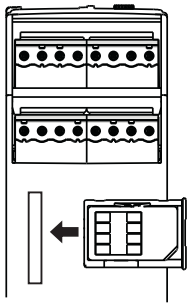

7.5.2 Write data to chip card

If you are inserting a chip card which has not yet been written by a PNOZ s30, you have the option to:

	Insert chip card	1.		2.	Data is written to the chip card
Please insert SIM Card!	**Write configuration to SIM: No?**		**Write configuration to SIM: Yes?**		**Current menu**

Allow data to be written to the chip card

	Insert chip card	**1.**	Data is **not** written to the chip card
Please insert SIM Card!	**Write configuration to SIM: No?**		**Insert rewritable SIM Card!**

Do not allow data to be written to the chip card

7.5.3 Read data from chip card

If you are inserting a chip card which has not yet been written by a PNOZ s30, you have the option to:

	Insert chip card (data on chip card different from device)	**1.**		**2.**	Data is read into the device
Current menu	**SIM: Name of the configuration (8 characters)** **CRC: 12345 (0 .. 65535)** **Load SIM: No?**		**SIM: Name of the configuration (8 characters)** **CRC: 12345 (0 .. 65535)** **Load SIM: Yes?**		**Current menu**

Allow data to be read from the chip card

	Insert chip card (Data on chip card different from device)	**1.**	Data is **not** read into the device, data is written to the chip card
Current menu	**SIM: Name of the configuration (8 characters)** **CRC: 12345 (0 .. 65535)** **Load SIM: No?**		**Write configuration to SIM: No?** (for more details see "Write data to chip card)

Do not allow data to be read from the chip card

7.5.4 Transfer device parameters

You can transfer device parameters from one device to another using the chip card.

Proceed as follows:

- Remove chip card containg the data from device 1.
- Insert chip card in device 2.
- Confirm the message **Load SIM Yes?**.
  The data is transferred.

7.5.5 Duplicate chip card

You can also create copies of a chip card and its data.

Proceed as follows:

- Remove chip card containg the device data.
- Insert a new chip card into the device.
- Confirm the message **Write configuration to SIM Yes?**.
- The new chip card is written.

7.6 Save configuration with Software SmartCardCommander

You have the option to save a PNOZ s30 configuration from the chip card to your computer. The configuration can be saved on the computer and then downloaded to other chip cards.

To do this you will need the chip card reader **PNOZ Chip Card Reader** with the corresponding **SmartCardCommander** software. Both are available from Pilz as accessories, individually or as part of a set (see Accessories [109]).

Save PNOZ s30 configuration on the computer

1. Make a note of the configuration's CRC in the PNOZ s30. It is shown on the display in the **Information/ Configuration CRC** menu. This will be needed later to check whether the correct configuration is saved on the device.
2. Remove the chip card from the PNOZ s30 and insert it into the holder for the chip card reader.
3. Start the **SmartCardCommander** software.
4. Insert the holder containing the chip card into the chip card reader.
5. The **Memory Card** directory is displayed in a list under **Hardware** on the software interface of the **SmartCardCommander** .

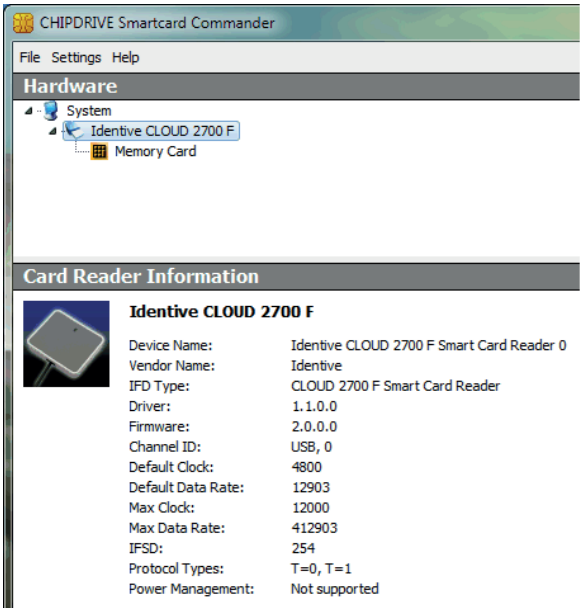

6. To read the data on the chip card, click on the **Memory Card** directory and then select **Read Data from Card**.

7. When **Data read successfully** is displayed on the software interface, the data can be saved as a hex file in any directory on the computer.
8. Make sure that the corresponding configuration CRC, which you noted down, is saved in the same directory.

Download configuration from the computer to the PNOZ s30

1. Insert a chip card into the holder for the chip card reader and insert this into the chip card reader.
2. Start the **SmartCardCommander** software.
3. To write the chip card, select **Write Data to Card** and confirm with **Yes**.
4. Insert the chip card in the PNOZ s30 and proceed as described under Read data from chip card [📖 51].
5. To ensure that the configuration has been transferred correctly, check that the CRC for the configuration in the PNOZ s30 matches the configuration CRC you noted down on the computer.



CAUTION!

With each transfer, you must check that the appropriate configuration for an application is transferred to a device!

7.7 Menu overview

The tables provide an overview of the menu settings.

7.7.1 Permanent display

If no settings are made, information regarding the configuration and current values are shown on the display.

You can change the permanent display on the display in the "Settings" menu.

7.7.2 Basic settings Ini pnp pnp

Settings for basic configuration 1

Level	Designation on the display	Description	Settings
1	**Basic Parameter** **Ini pnp pnp** Default: Load?	Select the default settings with which the basic configuration menu **Ini pnp pnp** is to be called: -Load: The basic parameters are loaded. Then it switches to the basic menu **Ini pnp pnp**. The basic parameters should always be loaded when commissioning for the first time. - Edit?: The basic parameters are not loaded, i.e. all parameters are retained. The basic menu parameters can be changed within the permitted boundaries. - Escape: Exits the basic menu.	
2	**Standstill** **Rel.1 Out 1** Default: 2.00 Hz	Enter standstill frequency	100 mHz ... 10.0 Hz
2	**v max** **Rel.2 Out 2** Default: 500 Hz	Enter the max. permitted speed	10 mHz ... 3.00 kHz

Other, pre-defined settings:

- **Encoder type**
  2 pnp type proximity switches
- **Parameter set/select input**
  P0, select inputs are ignored (Select inputs mode: "None")

- **Hysteresis**

  Standstill and speed, 2 % each
- **Output assignment**
  - Standstill: Relay output Rel.1 and semiconductor output Out 1
  - Speed: Relay output Rel.2 and semiconductor output Out 2
- **Start mode**
  - Rel.1 and semiconductor output Out 1, Rel.2, Out 1, Out 2: Automatic start "Automatic"
- **Switch delay**

  None
- **Max. encoder frequency**

  3.5 kHz

7.7.3 Basic settings for the rotary encoder

Settings for basic configuration 2

Level	Designation on the display	Description	Settings
1	**Basic Parameter Encoder:** Default: Load?	Select the default settings with which the basic configuration menu "**Rotary encoder:**" is to be called: - Load: The basic parameters are loaded. Then it switches to the basic menu "**Rotary encoder:**". The basic parameters should always be loaded when commissioning for the first time. - Edit: The basic parameters are not loaded, i.e. all parameters are retained. The basic menu parameters can be changed within the permitted boundaries. -Escape: Exits the basic menu.	
2	**Encoder** Default: TTL differential	Select rotary encoder type	-TTL differential (A, /A, B, /B) -TTL single ended (A, B) -HTL differential (A, /A, B, /B) -HTL single ended (A, B) -sin/cos 1 Vss (A, /A, B, /B) -Hiperface (A, /A, B, /B)

Level	Designation on the display	Description	Settings
2	**Standstill** **Rel.1 Out 1** Default: 100 Hz	Enter standstill frequency	10 mHz to 1.00 kHz
2	**v max** **Rel.2 Out 2** Default: 5.00 kHz	Enter the max. permitted speed	10 mHz to 1.00 MHz

Other, pre-defined settings:

- **Switch functions**
  - **Direction (F3)**

    Left direction
    Tolerance for wrong direction = 10 pulses
  - **Direction (F4)**

    Right direction
    Tolerance for wrong direction = 10 pulses
- **Parameter set/select input**

  P0, select inputs are ignored (Select inputs mode: "None ")
- **Hysteresis**

  Standstill and speed, 2 % each
- **Output assignment**
  - Standstill: Relay output Rel. 1 and semiconductor output Out 1
  - Speed: Relay output Rel. 2 and semiconductor output Out 2
  - Left direction: External output Ext. 1 and semiconductor output Out 3
  - Right direction: External output Ext. 2 and semiconductor output Out 4
- **Start mode**
  - All outputs: Automatic start ("Automatic")
- **Switch delay**

  None
- **Max. encoder frequency**

  1 MHz

7.7.4 Settings

Level	Designation on the display	Description	Settings
1	**Permanent Display** Default: Std Min : Sek (System time) v (current speed of track AB) Position	Permanent display Current values and information regarding configuration are displayed. You can change the permanent display on the display	**Display combinations:** ▸ vz (current speed of track Z) ▸ v (current speed of track AB) ▸ Position ▸ Switch functions 1 ... 9: F1 ... F9 ▸ v (current speed of track AB) ▸ Position ▸ Line 1/2: F1/F2, F3/F2, F5/F4, F7/F6 or F9/F8 (parameters selected via select inputs). ▸ v (current speed of track AB) ▸ Std Min : Sek (System time) ▸ v (current speed of track AB) ▸ Position
1	**Displ. Units** **Speed: Dist: Pos.:** Default: Hz Imp	Select unit of speed and distance (position) .	**Speed:** (Speed) **- Pos.** (distance/position) ▸ Hz Imp (Pulse) ▸ Hz Edg (Edge) ▸ m/s m ▸ m/min m ▸ m/h m ▸ rps rot ▸ rpm rot
1	**Conversion** Default: 1 Hz= 1 Imp/s	Unit conversion. Enter ratio of unit to pulses.	Display ▸ 1 Hz= 1 Imp/s ▸ 1 Hz = 4 Edg/s ▸ 1 m = x Imp (x = 1 ... 10,000,000 pulses) ▸ 1 rot = x Imp (x = 1 ... 10,000,000 pulses)
1	**Encoder Settings**	Create encoder configuration for the tracks A, /A, B, /B, Z, /Z, S	

Level	Designation on the display	Description	Settings
2	**Encoder** Default: Undefined	Select pre-defined encoder types for the tracks A, B and Z: Proximity switch Encoder ▸ -with and without inverted signals ▸ - with or without Z-Index (0-Index) ▸ - with proximity switch at track Z Note: If "Undefined" is selected, an error message is shown when you confirm the menu	**No encoder selected:** ▸ Undefined **Proximity switch (Ini):** ▸ Initiator A: pnp B: pnp ▸ Initiator A: npn B: pnp ▸ Initiator A: pnp B: npn ▸ Initiator A: npn B: npn **Encoder:** ▸ **TTL** – TTL differential (A, /A, B, /B) – TTL single ended (A, B) ▸ **TTL with Z-Index** ▸ TTL diff. Z index (A, /A, B, /B, Z, /Z) ▸ TTL single Z index (A, B, Z) ▸ **HTL** – HTL differential (A, /A, B, /B) – HTL single ended (A, B) ▸ **HTL with Z-Index** HTL diff. Z index (A, /A, B, /B, Z, /Z) HTL single Z index (A, B, Z) ▸ **Sin/Cos 1 Vss** – sin/cos 1 Vss (A, /A, B, /B) ▸ **Sin/Cos 1 Vss with Z-Index** – sin/cos 1 Vss Z Index (A, /A, B, /B, Z, /Z) ▸ **Hiperface** – Hiperface (A, /A, B, /B)

Level	Designation on the display	Description	Settings
			Encoder + pnp proximity switch ▸ **TTL + pnp proximity switch *** – TTL diff. (A, /A, B, /B), Z Freq Inipnp (Z) – TTL single (A, B), Z Freq Inipnp (Z) ▸ **HTL + pnp proximity switch *** – HTL diff. (A, /A, B, /B), Z Freq Inipnp (Z) – HTL single (A, B),Z Freq Inipnp (Z) ▸ **sin/cos 1 Vss + pnp proximity switch *** – sin/cos 1 Vss (A, /A, B, /B), Z Freq Inipnp (Z) ▸ **Hiperface + pnp proximity switch *** – Hiperface (A, /A, B, /B), Z Freq Inipnp (Z) * Alternatively, a track from an HTL encoder can also be used instead of a pnp proximity switch The configuration is the same as with the pnp proximity switch as Z-frequency monitoring.
2	**Track /A/B**	Settings for tracks A and B	
3	**AB Direction** Default: Normal	Select direction for tracks A and B Information: This function is used to display a forward movement as positive linear/rotational speed, irrespective of the installation of the encoder.	▸ Normal ▸ Inverted
3	**Track AB fmax** Default: 10 mHz	Enter max. frequency of the encoder on tracks A and B Important: The frequency must be less than or equal to the max. encoder frequency specified in the encoder's data sheet and less than the max. speed of the monitored drive.	10 mHz … 1.00 MHz
2	**Track Z**	Settings for track Z	

Level	Designation on the display	Description	Settings
3	**Track Z fmax** Default: 10 mHz	Enter max. frequency of the encoder on track Z Important: The frequency must be less than the max. encoder frequency specified in the encoder's data sheet	10 mHz … 1.00 MHz
2	**AB/fZ Ratio** Default: 1.0000: 1	**Only required when monitoring broken shearpins.** Enter the ratio of the frequency on tracks AB "fAB" to the frequency on track Z "fZ". Used to check the Z-Index or for frequency monitoring on track Z **About** Calculating the frequency ratio: Enter permanent display: "vz: v: Position:" Switch on drive Read vz and v Divide v/vz Enter result as ratio fAB to fZ	0.0001 ... 400,000: 1
2	**Track S**	Settings for track S (error track)	
3	**Track S** Default: Not used	Use of track S: -Not used (track S is not used) -Evaluation (track S is used)	▸ Not used ▸ Evaluation
3	**Track S Umax** Default: 6.0 V	Enter max. voltage at track S. If the voltage is > Umax, an error is displayed and the outputs are switched off.	0.0 V ... 30.0 V
3	**Track S Umin** Default: 2.0 V	Enter min. voltage at track S. If the voltage is < Umin, an error is displayed and the outputs are switched off.	0.0 V ... 30.0 V
1	**Delay Time Startup** Default: 0.00 s	Select start-up delay (The start-up phase of the PNOZ s30 is extended by this time. The encoder signals are not evaluated until after the start-up phase.)	0 ... 600 s

Level	Designation on the display	Description	Settings
1	**Function Parameter**	Select function parameter	
2	**Standstill vmax: :** Default: 2.00 Hz	Select standstill frequency Validation cutoff frequency: As implausible signals may arise due to edge jitter on the sensors around the standstill position, a validation cut-off frequency must be configured for sensor types with proximity switches (edge jitter is caused by the position control of the drive frequency converter or by external interference signals). If the value of the validation cut-off frequency falls below the configured value, the feasibility check of the sensors will no longer be run.	10 mHz ... 1.00 MHz or the corresponding value in the selected unit
2	**(F1 ... F9) Parameter**	Enter parameter for the switch functions F1 ... F9	
3	**(F1 ... F9) (P0 ... P15) Parameter** Default: 10 mHz	For each switch function F1 ... F9 up to 16 parameters P0 ... P15 can each be configured.	
4	**(F1 ... F9) (P0 ... P15) Teach v max:** Display: Current linear/rotational speed	The current linear/rotational speed is displayed and can be adopted as a limit value.	
4	**(F1 ... F9) (P0 ... P15) vmax: Standstill**	"**Standstill**" is displayed and can be adopted Info: The standstill frequency is selected globally in the menu "**Standstillvmax: **" (see above)	

Level	Designation on the display	Description	Settings
4	**(F1 ... F9)** **(P0 ... P15)** **vmax:** **2.00 kHz**	Select linear/rotational speed limit	10 mHz ... 1.00 MHz or the corresponding value in the selected unit
4	**(F1 ... F9)** **(P0 ... P15)** **Function** Position **(1 … 4)**	Select position monitoring 1 ... 4	
4	**(F1 ... F9)** **(P0 ... P15)** **Function** **(Direct. Left, Direct. Right)**	Select left-hand or right-hand direction monitoring	
4	**(F1 ... F9)** **(P0 ... P15)** **Fixed value** **(On/Off)**	Select static value On or Off	
1	**Assign Outputs**	Assign functions to outputs	

Level	Designation on the display	Description	Settings
2	**Output (Rel.1 ... Out 4)** Default: 0: Off	Each output can be assigned a switch function (1 ... 9: F1 ... F9) or a range (10: F2-F3, 11: F4-F5, 12: F6-F7, 13: F8-F9). Each output can also be used as an error output (14: error) or be switched off (0: Off). Outputs: Rel.1: Relay output 1 Rel.2: Relay output 2 Ext.1: External output 1 Ext.2: External output 2 Out 1 ... Out 4: Semiconductor outputs 1 ... 4 Out 4 : configurable also as analogue output	0: Off 1 ... 9: F1 ... F9 10: F2-F3 11: F4-F5 12: F6-F7 13: F8-F9 14: error Logic operation (Log. Conn) 15: F2 ∧ F3 16: F4 ∧ F5 17: F1 ∧ F6-F7 18: F1 ∧ F8-F9 19: F6 v F7 20: F8 v F9 21: F1 v F2-F3 22: F1 v F4-F5 Analogue output(Analog) 23: 0 - 20 mA 24: 4 - 20 mA
1	**Start mode**	Select start behaviour	
2	**Start mode (Rel.1 ... Out 4)** Default: Monitored /	Select start mode for each output separately AutomaticAutomatic start Monitored /Monitored start with rising edge at S34 Monitored \Monitored start with falling edge at S34	▸ Automatic ▸ Monitored / ▸ Monitored \

7.7.5 Advanced settings

Level	Menu designation	Description	Settings
1	**Positions Parameters**	Settings for position monitoring functions	
2	**Position (1 ... 4)** Start mode Default: Monitored /	Enter start type for position monitoring	▸ Monitored / ▸ Automatic
2	**Position (1 ... 4)** **Window width** Default: 1 pulse	Enter width of position window for position monitoring functions 1 ... 4	1 ... 24,900,000 pulses or the corresponding value in the selected unit
1	**Direction Parameter**	Settings for direction monitoring	
2	**Direction** **Autoreset** Default: deactivated	Activate/deactivate automatic reset of the direction monitoring	▸ deactivated ▸ activated
2	**(Direct. Left max. right, Direct. Right max. left)** Default: 0 pulses	Enter max. tolerated number of pulses (or Edg, m, rot) in the wrong direction.	1 ... 24,900,000 pulses or the corresponding value in the selected unit
1	**Mode** **Select Input** Default: None	Setting for using the select inputs	▸ All 16 ▸ 1 from 4 ▸ None
1	**Delay** **Select Input** Default: tdl: 0 ms	Enter delay time of the select inputs Y10 – Y13 Info: The states of the select inputs are only adopted if they were unchanged during the set time.	0 ... 30.0 s
1	**Function Hysteresis**		
2	**(F1 ... F9) Function Hysteresis** Default: 1 %	Enter hysteresis for the switch functions F1 ... F9 (not effective with position and direction monitoring)	0 ... 50 %
1	**Output Delay**	Setting for the delay effect and delay time for the outputs	

Level	Menu designation	Description	Settings
2	**Delay Output (Rel.1 ... Out 4)** Default: On 0 ms (only display)	Setting for the delay time effect and delay time for the respective output	
3	**Delay Effect (Rel.1 ... Out 4)** Default: 	Enter whether the delay time is to be activated when switching on, switching off, or switching on and off.	▸ Switch-on delay retriggerable  ▸ Switch-off delay retriggerable  ▸ Switch-on switch-off delay retriggerable  ▸ Switch-off delay not retriggerable 
3	**Delay Time (Rel.1 ... Out 4)** Default: tdO: 0 ms	Select delay time for the respective output	0 ... 30.0 s
1	**Output Out Logic**	Setting for the switching direction of the semiconductor outputs	
2	**output (Out 1 ... Out 4) Logic** Default: N/O contact	Select the switching direction of the semiconductor outputs Out 1 ... Select Out 4: N/O contact (normally energised mode) N/C contact (normally de-energised mode)	▸ N/O contact ▸ N/C contact
1	**Outputs Synchronous start**	Setting for synchronous start	
2	**Sync. Start (Rel. 1 ... Out 4)** Default: deactivated	Set whether outputs are to be started synchronously.	▸ deactivated ▸ activated
1	Outputs Out 4 Analog	Scaling of analogue input	

Level	Menu designation	Description	Settings
1	**Out 4 Analog** f at 20 mA Default: 1 MHz	Enter maximum frequency f_{max} for 20mA	Frequency f_{max}: 10 mHz … 1 MHz
1	**Name of Configuration** Default: Default	Enter name of the configuration The name may be a max. of 8 characters in length It is stored on the chip card	**.....**
1	**Password Settings**	Change passwords Note: In the "Default Settings" menu, the passwords are reset to the default setting: 00000.	
2	**Master PW**	Change master password	0000 ... 9999
2	**Customer PW**	Change customer password	0000 ... 9999
2	**Language** Default: English	Select menu language	▸ English ▸ German ▸ French
1	**Default Settings**	Select whether the parameters are to be reset to the default settings YesAll parameters are reset to the default values. The language is set to English and all passwords are set to 0000.	▸ Escape ▸ Yes

7.7.6 Information

Level	Menu designation	Description	Display/Settings
1	**System Time**	Time that the device is switched on	xxx.xxx h xx min xx s
1	**Max. Speed** **Track AB**	Max. measured linear/rotational speed at tracks A and B The value can be reset to 0	0 … 1 MHz or the corresponding value in the set unit Reset: Reset: - Yes? - No

Level	Menu designation	Description	Display/Settings
1	**Max. Speed** **Track Z**	Max. measured linear/rotational speed at track Z The value can be reset to 0	0 … 1 MHz or the corresponding value in the set unit Reset: Reset: - Yes? - No?
1	**Relay (Ctrl, 1, 2) Cycles**	Information: Total number of relay operations Relay Ctrl (Root relay, common 2nd shutdown route) Relay 1 Relay output -12, -14 Relay 2 Relay output -22, -24	0 ... 6,000,000 x, > 6,000,000 x
1	**CRC of Configuration**	Check sum of configuration parameters	0 ... 65535
1	**Error Stack Entries**	Error stack entries Up to 20 error stack entries are displayed See section Error stack entries [📖 75] Further information can be displayed by pressing the rotary knob.	Repairable error: Level 2: 1st line: Seq. No. "**Err.:**", error number 2nd + 3rd line: Plain text to describe error for the user Level 3: 1st line: Seq. No. "**Repairable**" 2nd line: "**System Time**" 3rd line: System time when the error occurred Level 4: Information for Pilz Service System errors: Level 2: 1st line: Seq. No. "**Err.:**", error number 2nd line: "**System Error**" 3rd line: System time when the error occurred Level 3: Information for Pilz Service
1	**Safe Error Stack Entries?**	The error list can be saved to the chip card.	

Level	Menu designation	Description	Display/Settings
2	**Safe Error Stack Entries:** 100%	Appears when the error list is saved	
1	**Input Module SW Version** Va.b	For internal purposes only	
1	**Main Unit SW Version** Va.b	For internal purposes only	
-	**Actual error messages**	Up to 8 errors are displayed. Repairable errors: Level 2, 3 and 4 (can be rectified by user) System errors: Level 2 and 3 (internal error, information for Pilz Service). The error messages can be hidden with "Escape".	Repairable error: Level 2: 1st line: Seq. No. "**Err.:**", error number 2nd + 3rd line: Plain text to describe error for the user Level 3: 1st line: Seq. No. "**Repairable**" 2nd line: "**System Time**" 3rd line: System time when the error occurred Level 4: Information for Pilz Service System errors: Level 2: 1st line: Seq. No. "**Err.:**", error number 2nd line: "**System Error**" 3rd line: System time when the error occurred Level 3: Information for Pilz Service
-	**Error Faulty Signal: A/A B/B Z/Z**	Error message: Incorrect signal at one or more tracks. The message - is continually updated. - can be ignored temporarily.	

Level	Menu designation	Description	Display/Settings
-	**AB frequency deviation**	Error message: Frequency difference between the proximity switches on tracks A and B The message - is continually updated - can be ignored temporarily	
-	**Chip card messages**		
-	**Please insert SIM Card!**	Appears when the device is operated without a chip card or when a defective chip card is inserted, appears again when parameters are changed. Info: The message disappears after 30 s or by pressing the rotary knob	
-	**Please insert writable SIM Card!**	Appears when the answer to "**Load SIM**" and "**Write Configuration to SIM:**" is "No"	
-	SIM: ..... CRC: ..... **Load SIM** Default: No?	Appears when device detects a chip card with a valid configuration. -> Select whether the data on the chip card is to be transferred to the device.	- No? - Yes?
-	**Write Configuration to SIM:** Default: No?	Appears - When a chip card has been used that does not yet contain data - When a chip card has been used that does not contain any valid data - When **Load SIM**No was selected -> Select whether the data on the chip card is to be saved.	- No? - Yes?
-	**SIM loaded!** **Internal CRC changes!**	Appears when the data has been transferred to the device and therefore the CRC has changed.	

Level	Menu designation	Description	Display/Settings
-	**Password messages:**		
-	**Master PW:** Default: 0000	-> Enter master password **Password:**	0000 ... 9999
-	**Password:** Default: 0000	-> Enter customer password	0000 ... 9999

7.8 Example: Configure basic configuration 2

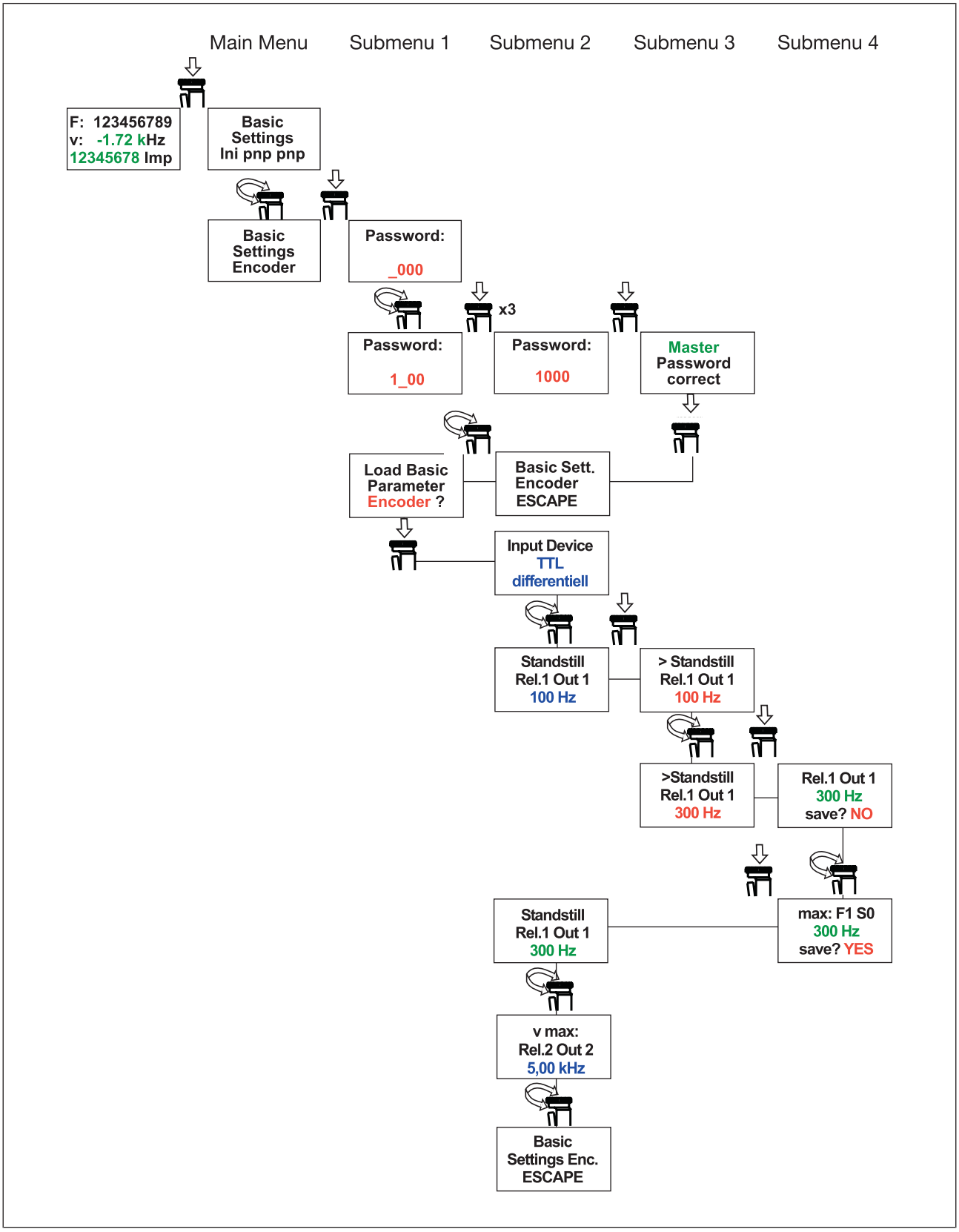

8 Create configuration in PNOZsigma Configurator

For devices PNOZ s30 from Version 2.2 you have the opportunity to perform the configuration in the software tool PNOZsigma Configurator.

The PNOZsigma Configurator can be downloaded from the Internet in the download area of the Pilz website.

With the PNOZsigma Configurator you can configure all the functions that are described in the function description.

In Version 1.0. and 1.1 of the PNOZsigma Configurator the configuration is downloaded via the chip card reader **PNOZ Chip Card Reader**. From Version 1.2 of PNOZsigma Configurator you can perform the download alternatively via the cable **PNOZ s30 USB-configuration-cable**. Both are available from Pilz as accessories [109].

8.1 Download project from the PNOZsigma Configurator to the PNOZ s30

CAUTION!

Perform a commissioning test every time that you download a project to the PNOZ s30.

CAUTION!

With each transfer, you must check that the appropriate configuration for an application is transferred to a device!

Download project via chip card from the PNOZsigma Configurator to the PNOZ s30

1. Open the PNOZsigma Configurator and create your configuration.
2. Remove the chip card from the PNOZ s30 and insert it into the holder for the chip card reader.
3. In the PNOZsigma Configurator, click on the project to be downloaded in the ***Project Overview*** and click on the button in the project to download the configuration to the chip card.
4. When the download is complete, remove the chip card from the chip card reader and insert it into the PNOZ s30 again.
5. To save the configuration on the PNOZ s30 follow the instructions given in chapter Read data from chip card [51].
6. To ensure that the configuration has been transferred correctly, check that the Configuration CRC in the PNOZ s30 matches the CRC that is shown in the title bar in the PNOZsigma Configurator.

Download project via cable from the PNOZsigma Configurator to the PNOZ s30

1. Connect the PNOZ s30 with a free USB interface of your computer. To do this, use the cable **PNOZ s30 USB-configuration-cable** (order no.: 750 040), which is available at Pilz as an accessory [109].
2. In the PNOZsigma Configurator, click on the project to be downloaded in the **Project Overview** and click on the  button in the project to download the configuration to the PNOZ s30.
   Please note: Existing data on the PNOZ s30 are overwritten.
3. To ensure that the configuration has been transferred correctly, check that the Configuration CRC in the PNOZ s30 matches the CRC that is shown in the title bar in the PNOZsigma Configurator.

8.2 Transfer project from PNOZ s30 to the PNOZsigma Configurator

It is possible to download a configuration from PNOZ s30 to the PNOZsigma Configurator and to create a new project there.

Transfer project via chip card from PNOZ s30 to the PNOZsigma Configurator

It is also possible to download a configuration from PNOZ s30 on the PNOZsigma Configurator and to create a new project there.

1. Ensure that the required configuration is saved to the chip card (see chapter Write data to chip card [50]).
2. Remove the chip card from the PNOZ s30 and insert it into the holder for the chip card reader.
3. In the PNOZsigma Configurator, click on the start page on the  button to download the configuration to the chip card.

When the download is complete, the configuration is created in PNOZsigma Configurator as a project.

Transfer project via cable from PNOZ s30 to the PNOZsigma Configurator

1. Connect the PNOZ s30 with a free USB interface of your computer. To do this, use the cable **PNOZ s30 USB-configuration-cable** which is available at Pilz as an accessory [109].
2. In the PNOZsigma Configurator, click on the start page on the button  to download the configuration to the PNOZ s30.
   Please not when downloading from a PNOZ s30 Version 2.2:
   When transferring the configuration from a PNOZ s30 with device version 2.2, the CRC of the PNOZ s30 configuration must be entered into the PNOZsigma Configurator, before you create the project in PNOZsigma Configurator.

When the download is complete, the configuration is created in PNOZsigma Configurator as a project.

Replace project in PNOZsigma Configurator

If a project with the same name already exists in the PNOZsigma Configurator, you can write over the existing project or open the new project and save it under a different name. By changing the project name, the configuration CRC is also changed.



NOTICE

Please note:

Identical project configurations have the same check sum when the project name has not been changed.

9 Operation and diagnostics

9.1 LED indicators

Legend

 LED on

 LED flashes

LED						Error
Power	In1	In2	Rel 1	Rel 2	Fault	
☼						Supply voltage is present
◐					☼	At least one of the internal supply voltages is outside the permitted range.
☼	☼					A high signal is present on track A (terminal In1 or RJ45).
☼	◐				☼	Error on track In1 or A
☼		☼				A high signal is present on track B (terminal In2 or RJ45).
☼		◐			☼	Error on track In2 or B
☼			☼			Relay output 1 is switched on
☼			◐		☼	Error on relay output 1
☼				☼		Relay output 2 is switched on
☼				◐	☼	Error on relay output 2
☼					☼	Fault that can be repaired by the user leading to safe condition.
☼					◐	Internal error leading to a safe condition.

9.2 Display

9.2.1 Error stack entries

Up to 20 status and error messages are stored in the unit and can be called up via the display (see section entitled "Display Menu – Configuration – Menu Overview). They can also be called up if the error has been rectified and the unit has been restarted.

The following information is shown on the display:

- Sequential number of an error stack entry (1 ... 20).
- Error number (0 ... 65 535)

- Error category
  - Errors that can be rectified by the user
    are described in the following list
    Remedy: Rectify error; if necessary, contact Pilz
  - Internal errors (system errors, all errors that are not described in the list)
    Remedy: Switch device on and off, contact Pilz

9.2.2 Current error messages

If an error is detected, the "Fault" LED lights up on the device and an error message appears on the display (see error stack).

Up to 8 current error messages are shown on the display.

A message is shown until the error is rectified and the device has been switched off and then on again.

List of the errors that can be rectified by the user

Error no.	Error message	Description	Remedy
2	PNOZ s30 cold started	The unit is ready for operation (Error stack entry)	Purely for information
3	Brown Out occurred	Supply voltage too low	Check supply voltage
2000	Wrong signal A ... /Z	Unfeasible signal from encoder	-Ensure that there is no open circuit in the wiring of input A ... /Z -Ensure that the correct encoder is configured and connected -Ensure that the encoder operates correctly
2001	AB frequency > fmax AB	The maximum frequency of the encoder at tracks AB was exceeded	-Enter a max. frequency for "Track AB fmax" that is not exceeded during normal operation -Ensure that a suitable encoder is connected
2002	A frequency > fmax AB	The maximum frequency of the proximity switch at track A was exceeded	-Enter a max. frequency for "Track AB fmax" that is not exceeded during normal operation -Ensure that a suitable proximity switch is connected
2003	B frequency > fmax AB	The maximum frequency of the proximity switch at track B was exceeded	-Enter a max. frequency for "Track AB fmax" that is not exceeded during normal operation -Ensure that a suitable proximity switch is connected

Error no.	Error message	Description	Remedy
2004	Z frequency > fmax Z	The maximum frequency of the encoder at track Z was exceeded	-Enter a max. frequency for "Track AB fmax" that is not exceeded during normal operation -Ensure that a suitable encoder is connected
2007	fAB / fZ does not fit!	The ratio of the AB frequency does not match the fAB/fZ ratio	-Change fAB/fZ in the menu -Ensure that there is no broken shear pin or slippage -Ensure that the two encoders operate correctly
4010	FL K1K2 of Extens.Device	Feedback loop K1-K2 of expansion module open	-Ensure that the feedback loop is wired correctly -Ensure that the expansion module operates correctly
4011	FL K3K4 of Extens.Device	Feedback loop K3-K4 of expansion module open	-Ensure that the feedback loop is wired correctly -Ensure that the expansion module operates correctly
4012	Expansion connector is missing	The terminator on the expansion interface is not connected	-Connect terminator -Ensure that the expansion module operates correctly
5000	Input Device undefined!	No encoder configured (delivery condition, default values)	-Create the encoder configuration in the "Encoder settings" menu
5003	Pos. or Dir. not with Ini	Position monitoring or direction monitoring configured, although "Initiator" is selected as the encoder	-Do not configure direction or position monitoring - Select encoder
6000	"AB frequency deviation"	Frequency difference between proximity switches A and B e.g. due to edge jitter at standstill over an extended period	-Reset error via a valid signal above the standstill limit or with a falling edge at input S34 (Start) - Ensure that the proximity switches operate correctly
7000	Select Input not 1 v .4 !	A parameter set other than P1, P2, P4 or P8 is selected in mode "1 from 4".	- Select a longer delay time for the select inputs in order to filter out invalid signals resulting from contact bounce or an intermediate state

Error no.	Error message	Description	Remedy
10241	Stuck at High Track A or /A	A high signal is always present at track A or /A.	-Ensure that the encoders are configured correctly -Ensure that the encoder operates correctly -Ensure that there is no short circuit in the wiring
10242	Stuck at Low Track A or /A	A low signal is always present at track A or /A.	-Ensure that the encoders are configured correctly -Ensure that the encoder operates correctly -Ensure that there is no short circuit in the wiring
10243	Stuck at High Track B or /B	A high signal is always present at track B or /B.	-Ensure that the encoders are configured correctly -Ensure that the encoder operates correctly -Ensure that there is no short circuit in the wiring
10244	Stuck at Low Track B or /B	A low signal is always present at track B or /B.	-Ensure that the encoders are configured correctly -Ensure that the encoder operates correctly -Ensure that there is no short circuit in the wiring
10245	Signal Offset Track A	The signal at track A has a DC offset	-Ensure that the encoders are configured correctly -Ensure that the encoder operates correctly -Ensure that the wiring is correct
10246	Signal Offset Track /A	The signal at track /A has a DC offset	-Ensure that the encoders are configured correctly -Ensure that the encoder operates correctly -Ensure that the wiring is correct
10247	Signal Offset Track B	The signal at track B has a DC offset	-Ensure that the encoders are configured correctly -Ensure that the encoder operates correctly -Ensure that the wiring is correct

Error no.	Error message	Description	Remedy
10248	Signal Offset Track /B	The signal at track /B has a DC offset	-Ensure that the encoders are configured correctly -Ensure that the encoder operates correctly -Ensure that the wiring is correct
10249	Signal error AB: Sin2 Cos2	No feasible signal at the tracks AB	-Ensure that the encoders are configured correctly -Ensure that the encoder operates correctly -Ensure that the wiring is correct -Check supply voltage
10250	Difference- Signal Error	No feasible signal at the tracks A and /A or B and /B	-Ensure that the encoders are configured correctly -Ensure that the encoder operates correctly -Ensure that the wiring is correct -Ensure that there is not too much interference on the encoder signals
10251	Z-Index missing	No index signal at track Z	-Ensure that the encoders are configured correctly -Ensure that the encoder operates correctly -Ensure that the wiring is correct - Check the configuration of the frequency ratio fAB to fZ
10252	Z-Index at wrong position	No feasible signal at track Z	-Ensure that the encoders are configured correctly -Ensure that the encoder operates correctly -Ensure that the wiring is correct - Check the configuration of the frequency ratio fAB to fZ
10255	Signal on inverted Track	The inverted tracks carry a voltage signal Target status: no signal (not connected)	-Ensure that the encoders are configured correctly -Ensure that the wiring is correct

Error no.	Error message	Description	Remedy
10256	Ini pnp pnp both inactive	Both proximity switches are inactive at the same time	-Install proximity switches such that one proximity switch is always activated. -Ensure that the encoders are configured correctly -Ensure that the proximity switches operate correctly -Ensure that the supply voltage is present at the proximity switches Ensure that the proximity switches are wired correctly
10257	Ini npn npn both inactive	Both proximity switches are inactive at the same time	-Install proximity switches such that one proximity switch is always activated. -Ensure that the encoders are configured correctly -Ensure that the proximity switches operate correctly -Ensure that the supply voltage is present at the proximity switches Ensure that the proximity switches are wired correctly
10258	Ini pnp npn both inactive	Both proximity switches are inactive at the same time	-Install proximity switches such that one proximity switch is always activated. -Ensure that the encoders are configured correctly -Ensure that the proximity switches operate correctly -Ensure that the supply voltage is present at the proximity switches Ensure that the proximity switches are wired correctly
10259	Ini npn pnp both inactive	Both proximity switches are inactive at the same time	-Install proximity switches such that one proximity switch is always activated. -Ensure that the encoders are configured correctly -Ensure that the proximity switches operate correctly -Ensure that the supply voltage is present at the proximity switches Ensure that the proximity switches are wired correctly

Error no.	Error message	Description	Remedy
10260	Ini Signal /A Not permitted	Invalid signal at track /A	-Ensure that the encoders are configured correctly -Ensure that the wiring is correct
10261	Ini Signal /B Not permitted	Invalid signal at track /B	-Ensure that the encoders are configured correctly -Ensure that the wiring is correct
10262	Ini Signal A invalid	The signal at track A is outside the permitted voltage range	-Ensure that the encoders are configured correctly -Ensure that the wiring is correct
10263	Ini Signal B invalid	The signal at track B is outside the permitted voltage range	-Ensure that the encoders are configured correctly -Ensure that the wiring is correct
10264	Track S Error wrong voltage	The voltage at track S is outside of the permissible range (e.g. because the encoder has detected an internal error and signals this via track S)	-Check supply voltage of the encoders -Ensure that the wiring is correct -Check configuration of the min. and max. voltage at track S "Track S Umax / Umin" -Ensure that the encoder operates correctly
10266	Stuck at High Track Z or /Z	A high signal is always present at track Z or /Z.	-Ensure that the encoders are configured correctly -Ensure that the encoder operates correctly -Ensure that there is no short circuit in the wiring
10267	Stuck at Low Track Z or /Z	A low signal is always present at track Z or /Z.	-Ensure that the encoders are configured correctly -Ensure that the encoder operates correctly -Ensure that there is no short circuit in the wiring
10268	Signal error Track A or B	No feasible signal at the tracks AB	-Ensure that the encoders are configured correctly -Ensure that the encoder operates correctly -Ensure that the wiring is correct -Check supply voltage.

Error no.	Error message	Description	Remedy
10269	Signal error Track /A or /B	No feasible signal at the tracks /A/B	-Ensure that the encoders are configured correctly -Ensure that the encoder operates correctly -Ensure that the wiring is correct -Check supply voltage.

9.2.3 Open circuit message

If an open circuit error is detected, the "Fault" LED lights up on the device, the outputs are switched off and an error message appears on the display.

The error message is continually updated. It will be displayed until the error is rectified.

The outputs will not switch back on until all the start-up conditions are met.

Error message	Description	Remedy
Error Signal: A/A B/B Z/Z	No feasible signal at one or more tracks	- Ensure that there is no open circuit in the wiring of tracks A... /Z - Ensure that the correct encoder is configured and connected - Ensure that the encoder operates correctly.

9.2.4 Frequency difference message on proximity switch

If a frequency difference error is detected, the "Fault" LED lights up on the device and a warning message appears on the display: "AB frequency deviation".

The warning message disappears automatically once valid signals are again present for both proximity switches. The Fault LED also goes out.

If the warning message appears, it will no longer be possible to carry out configured frequency range monitoring. The output or outputs will react as if the configured range has been violated.

If the frequency difference is present for an extended period, without a valid signal, greater than the global standstill frequency, from the two proximity switches, error message 6000 will appear (see "Current error messages"), all outputs will switch off and the Fault LED will light up.

The error message disappears automatically if

- Valid signals, greater than the global standstill frequency, are detected from both proximity switches

  or

- A falling edge is detected at start input S34

The outputs will not switch back on until all the start-up conditions are met.

Warning message	Description	Remedy
AB frequency deviation	Frequency of the proximity switch at track A differs from the frequency of the proximity switch at track B for too long and by too much.	- Ensure that the proximity switches operate correctly - Check whether a proximity switch constantly switches due to the drive's edge jitter.

9.3 Function test of the relay outputs

When the relay outputs are switched on, the mechanical contact on the relay cannot be tested automatically. Depending on the operational environment, measures to detect the non-opening of switching elements may be required under some circumstances.

When the product is used in accordance with the European Machinery Directive, a check must be carried out to ensure that the safety contacts on the relay outputs open correctly. Open the safety contacts (switch off output) and start the device again, so that the internal diagnostics can check that the safety contacts open correctly

- for SIL CL 3/PL e at least 1x per month
- for SIL CL 2/PL d at least 1x per year

10 Technical details

General	750330	751330
Certifications	**CCC, CE, EAC (Eurasian), TÜV, cULus Listed**	**CCC, CE, EAC (Eurasian), TÜV, cULus Listed**
Electrical data	**750330**	**751330**
Supply voltage		
Voltage	**24 - 240 V**	**24 - 240 V**
Kind	**AC/DC**	**AC/DC**
Voltage tolerance	**-15 %/+10 %**	**-15 %/+10 %**
Output of external power supply (AC)	**9 VA**	**9 VA**
Output of external power supply (DC)	**5,5 W**	**5,5 W**
Frequency range AC	**50 - 60 Hz**	**50 - 60 Hz**
Residual ripple DC	**160 %**	**160 %**
Duty cycle	**100 %**	**100 %**
External unit fuse protection F1 min.	**1 A**	**1 A**
External unit fuse protection F1 max.	**Max. conductor cross section**	**Max. conductor cross section**
Proximity switch input	**750330**	**751330**
Number of inputs	**2**	**2**
Input signal level		
Signal level at "1"	**11 - 30 V**	**11 - 30 V**
Signal level at "0"	**-0,5 - 3 V**	**-0,5 - 3 V**
Input resistance	**22 kOhm**	**22 kOhm**
Input's frequency range	**0 - 1.000 kHz**	**0 - 1.000 kHz**
Configurable monitoring frequency		
Without hysteresis	**10 mHz - 1.000 kHz**	**10 mHz - 1.000 kHz**
Incremental encoder input	**750330**	**751330**
Number of inputs	**1**	**1**
Connection type	**RJ45 female connector, 8-pin**	**RJ45 female connector, 8-pin**
Input signal level	**0,5 - 30 Vss**	**0,5 - 30 Vss**
Phase position for the differential signals A, /A and B,/B	**90° ±30°**	**90° ±30°**
Overload protection	**-50 - 65 V**	**-50 - 65 V**
Input resistance	**20 kOhm**	**20 kOhm**
Input's frequency range	**0 - 1.000 kHz**	**0 - 1.000 kHz**
Configurable monitoring frequency		
Without hysteresis	**10 mHz - 1.000 kHz**	**10 mHz - 1.000 kHz**
Inputs	**750330**	**751330**
Voltage at		
Start circuit DC	**24 V**	**24 V**
Feedback loop DC	**24 V**	**24 V**

Inputs	750330	751330
Current at		
Start circuit DC	**5 mA**	**5 mA**
Feedback loop DC	**5 mA**	**5 mA**
Max. inrush current impulse		
Current pulse, feedback loop	**0,06 A**	**0,06 A**
Pulse duration, feedback loop	**0,8 ms**	**0,8 ms**
Current pulse, start circuit	**0,06 A**	**0,06 A**
Pulse duration, start circuit	**0,8 ms**	**0,8 ms**
Reset input	**750330**	**751330**
Number	**4**	**4**
Low signal	**-3 - 5 V**	**-3 - 5 V**
High signal	**15 - 30 V**	**15 - 30 V**
Current	**5 mA**	**5 mA**
Analogue outputs	**750330**	**751330**
Number of analogue outputs	**1**	**1**
Type of analogue outputs	**Current**	**Current**
Output range	**0 .. 20 mA, 4 .. 20 mA**	**0 .. 20 mA, 4 .. 20 mA**
Max. open circuit voltage	**22 V**	**22 V**
Max. permitted resistive load	**500 Ohm**	**500 Ohm**
Typ. processing time of the analogue output	**8 ms**	**8 ms**
Accuracy of analogue output	**1,0 % (bei 25 °C)**	**1,0 % (bei 25 °C)**
Semiconductor outputs	**750330**	**751330**
Number	**4**	**4**
Voltage	**24 V**	**24 V**
Current	**50 mA**	**50 mA**
External supply voltage	**24 V**	**24 V**
Voltage tolerance	**-20 %/+20 %**	**-20 %/+20 %**
Relay outputs	**750330**	**751330**
Number of output contacts		
Safety contacts (N/O), instantaneous	**2**	**2**
Auxiliary contacts (N/C)	**2**	**2**
Max. short circuit current IK	**1 kA**	**1 kA**
Utilisation category		
In accordance with the standard	**EN 60947-4-1**	**EN 60947-4-1**

Relay outputs	750330	751330
Utilisation category of safety contacts		
AC1 at	**240 V**	**240 V**
Min. current	**0,01 A**	**0,01 A**
Max. current	**4 A**	**4 A**
Max. power	**1000 VA**	**1000 VA**
DC1 at	**24 V**	**24 V**
Min. current	**0,01 A**	**0,01 A**
Max. current	**4 A**	**4 A**
Max. power	**100 W**	**100 W**
Utilisation category of auxiliary contacts		
AC1 at	**240 V**	**240 V**
Min. current	**0,01 A**	**0,01 A**
Max. current	**4 A**	**4 A**
Max. power	**1000 VA**	**1000 VA**
DC1 at	**24 V**	**24 V**
Min. current	**0,01 A**	**0,01 A**
Max. current	**4 A**	**4 A**
Max. power	**100 W**	**100 W**
Utilisation category		
In accordance with the standard	**EN 60947-5-1**	**EN 60947-5-1**
Utilisation category of safety contacts		
AC15 at	**230 V**	**230 V**
Max. current	**3 A**	**3 A**
DC13 (6 cycles/min) at	**24 V**	**24 V**
Max. current	**4 A**	**4 A**
Utilisation category of auxiliary contacts		
AC15 at	**230 V**	**230 V**
Max. current	**3 A**	**3 A**
DC13 (6 cycles/min) at	**24 V**	**24 V**
Max. current	**4 A**	**4 A**
Utilisation category in accordance with UL		
Voltage	**240 V AC G.U. (same polarity)**	**240 V AC G.U. (same polarity)**
With current	**4 A**	**4 A**
Voltage	**24 V DC G. P.**	**24 V DC G. P.**
With current	**4 A**	**4 A**

Relay outputs	750330	751330
External contact fuse protection, safety contacts		
In accordance with the standard	**EN 60947-5-1**	**EN 60947-5-1**
Max. melting integral	**66 A²s**	**66 A²s**
Blow-out fuse, quick	**6 A**	**6 A**
Blow-out fuse, slow	**4 A**	**4 A**
Blow-out fuse, gG	**6 A**	**6 A**
Circuit breaker 24V AC/DC, characteristic B/C	**4 A**	**4 A**
External contact fuse protection, auxiliary contacts		
Max. melting integral	**66 A²s**	**66 A²s**
Blow-out fuse, quick	**6 A**	**6 A**
Blow-out fuse, slow	**4 A**	**4 A**
Blow-out fuse, gG	**6 A**	**6 A**
Circuit breaker 24 V AC/DC, characteristic B/C	**4 A**	**4 A**
Conventional thermal current	**4 A**	**4 A**
Contact material	**AgCuNi + 0,2 µm Au**	**AgCuNi + 0,2 µm Au**
Times	**750330**	**751330**
Switch-on delay		
With automatic start typ.	**15 ms**	**15 ms**
With automatic start max.	**50 ms**	**50 ms**
With automatic start after power on typ.	**3.920 ms**	**3.920 ms**
With automatic start after power on max.	**4 s**	**4 s**
With manual start typ.	**40 ms**	**40 ms**
With manual start max.	**100 ms**	**100 ms**
Delay-on de-energisation		
With power failure typ. UB 240 V	**100 ms**	**100 ms**
With power failure max. UB 240 V	**150 ms**	**150 ms**
With power failure typ. UB 24 V	**25 ms**	**25 ms**
With power failure max. UB 24 V	**50 ms**	**50 ms**
After safety function is triggered typ.	**8 ms**	**8 ms**
After safety function is triggered max.	**15 ms**	**15 ms**
Recovery time at max. switching frequency 1/s		
After power failure	**4 s**	**4 s**
After safety function is triggered	**1 s**	**1 s**
Reaction time after limit value is exceeded	**1/f_ist + 16 ms**	**1/f_ist + 16 ms**

Times	750330	751330
Waiting period with a monitored start		
With rising edge	**30 ms**	**30 ms**
With falling edge	**30 ms**	**30 ms**
Min. start pulse duration with a monitored start		
With rising edge	**30 ms**	**30 ms**
With falling edge	**30 ms**	**30 ms**
Supply interruption before de-energisation	**20 ms**	**20 ms**
Switch delay (selectable)	**0 - 30 s**	**0 - 30 s**
Delay on the select inputs (selectable)	**0 - 30 s**	**0 - 30 s**
Start-up delay (selectable)	**0 - 600 s**	**0 - 600 s**
Environmental data	**750330**	**751330**
Climatic suitability	**EN 60068-2-78**	**EN 60068-2-78**
Ambient temperature		
Temperature range	**-20 - 55 °C**	**-20 - 55 °C**
Storage temperature		
Temperature range	**-40 - 85 °C**	**-40 - 85 °C**
Climatic suitability		
Humidity	**93 % r. h. at 40 °C**	**93 % r. h. at 40 °C**
Condensation during operation	**Not permitted**	**Not permitted**
EMC	**EN 60947-5-1, EN 61000-6-2, EN 61000-6-3, EN 61326-3-1**	**EN 60947-5-1, EN 61000-6-2, EN 61000-6-3, EN 61326-3-1**
Vibration		
In accordance with the standard	**EN 60068-2-6**	**EN 60068-2-6**
Frequency	**10 - 55 Hz**	**10 - 55 Hz**
Amplitude	**0,35 mm**	**0,35 mm**
Airgap creepage		
In accordance with the standard	**EN 60947-1**	**EN 60947-1**
Overvoltage category	**II**	**II**
Pollution degree	**2**	**2**
Rated insulation voltage	**250 V**	**250 V**
Rated impulse withstand voltage	**4 kV**	**4 kV**
Protection type		
Housing	**IP30**	**IP30**
Terminals	**IP20**	**IP20**
Mounting area (e.g. control cabinet)	**IP54**	**IP54**
Mechanical data	**750330**	**751330**
Mounting position	**horizontally on mounting rail**	**horizontally on mounting rail**
Mechanical life	**10,000,000 cycles**	**10,000,000 cycles**

Mechanical data	750330	751330
Material		
Bottom	**PC**	**PC**
Front	**PC**	**PC**
Top	**PC**	**PC**
Connection type	**Screw terminal**	**Spring-loaded terminal**
Mounting type	**plug-in**	**plug-in**
Conductor cross section with screw terminals		
1 core flexible	**0,25 - 2,5 mm², 24 - 12 AWG**	–
2 core with the same cross section, flexible with crimp connectors, no plastic sleeve	**0,25 - 1 mm², 24 - 16 AWG**	–
2 core with the same cross section, flexible without crimp connectors or with TWIN crimp connectors	**0,2 - 1,5 mm², 24 - 16 AWG**	–
Torque setting with screw terminals	**0,5 Nm**	–
Conductor cross section with spring-loaded terminals: Flexible with/without crimp connector	–	**0,2 - 2,5 mm², 24 - 12 AWG**
Spring-loaded terminals: Terminal points per connection	–	**2**
Stripping length with spring-loaded terminals	–	**9 mm**
Dimensions		
Height	**98 mm**	**100 mm**
Width	**45 mm**	**45 mm**
Depth	**120 mm**	**120 mm**
Weight	**405 g**	**400 g**

Where standards are undated, the 2015-12 latest editions shall apply.

10.1 Safety characteristic data

NOTICE

You must comply with the safety characteristic data in order to achieve the required safety level for your plant/machine.

Operating mode	EN ISO 13849-1: 2015 PL	EN ISO 13849-1: 2015 Category	EN 62061 SIL CL	EN 62061 PFH_D [1/h]	IEC 61511 SIL	IEC 61511 PFD	EN ISO 13849-1: 2015 T_M [year]
Monitoring 1 encoder	**PL d**	**Cat. 2**	**SIL CL 2**	**2,88E-08**	**SIL 2**	**2,53E-03**	**20**
Monitoring 2 encoder	**PL e**	**Cat. 4**	**SIL CL 3**	**1,74E-09**	**SIL 3**	**1,46E-04**	**20**
Monitoring safe encoder	**PL e**	**Cat. 4**	**SIL CL 3**	**3,08E-09**	**SIL 3**	**2,66E-04**	**20**

All the units used within a safety function must be considered when calculating the safety characteristic data.

INFORMATION

A safety function's SIL/PL values are **not** identical to the SIL/PL values of the units that are used and may be different. We recommend that you use the PAScal software tool to calculate the safety function's SIL/PL values.

CAUTION!

It is essential to consider the relay's service life graphs. The relay outputs' safety-related characteristic data is only valid if the values in the service life graphs are met.

The PFH value depends on the switch frequency and the load of the relay output.
If the service life graphs are not accessible, the stated PFH value can be used irrespective of the switch frequency and the load, as the PFH value already considers the relay's B10d value as well as the failure rates of the other components.

10.2 Signal level of the encoders

Encoder type	"0" signal	"1" signal
HTL	-1.0 - 3.0 V	12.0 - 30.0 V
TTL	-0.5 - 0.8 V	3.5 - 5.5 V
PNP	-0.5 - 3.0 V	11.0 - 30.0 V
NPN	-0.5 - 3.0 V	11.0 - 30.0 V

Encoder type	DC offset	Amplitude differential	Reference voltage
Sin/Cos	2.5 V	1.0 Vss	-
Hiperface	2.5 V	1.0 Vss	2.5 V

11 Supplementary data

11.1 Service life graph of output relays

The service life graphs indicate the number of cycles from which failures due to wear must be expected. The wear is mainly caused by the electrical load; the mechanical load is negligible.

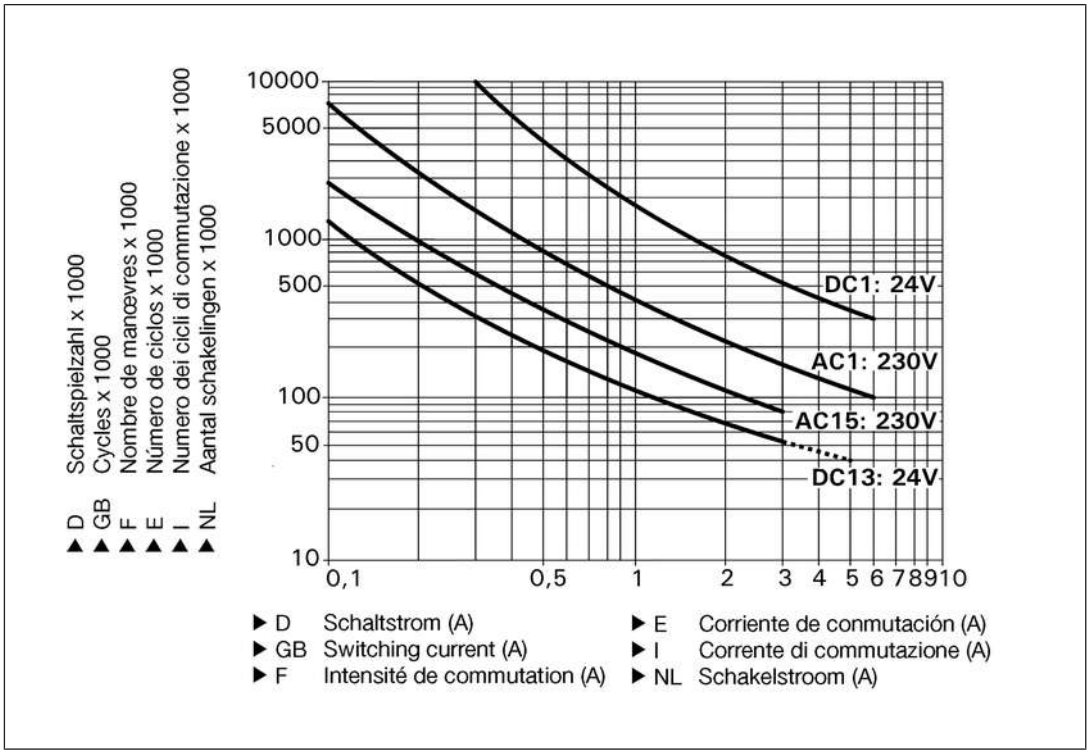

Example

- Inductive load: 0.2 A
- Utilisation category: AC15
- Contact service life: 1 000 000 cycles

Provided the application to be implemented requires fewer than 1 000 000 cycles, the PFH value (see Technical details [84]) can be used in the calculation.

To increase the service life, sufficient spark suppression must be provided on all relay contacts. With capacitive loads, any power surges that occur must be noted. With DC contactors, use flywheel diodes for spark suppression.

11.2 Permitted operating height

The values stated in the technical details apply to the use of the device in operating heights up to max. 2000 m above sea level. When used in greater heights, constraints have to be taken into account:

- Permitted maximum operating height 5000 m
- Reduction of rated insulation voltage and rated impulse withstand voltage for applications with safe separation:

Maximum operation height	Rated insulation voltage	Overvoltage category	Max. rated impulse withstand voltage
3000 m	150 V	II	2.5 kV
	100 V	III	2.5 kV
4000 m	150 V	II	2.5 kV
	100 V	III	2.5 kV
5000 m	100 V	II	1.5 kV
	24 V	III	0.8 kV

- Reduction of rated insulation voltage and rated impulse withstand voltage for applications with basic insulation:

Maximum operation height	Rated insulation voltage	Overvoltage category	Max. rated impulse withstand voltage
3000 m	250 V	II	2.5 kV
	150 V	III	2.5 kV
4000 m	250 V	II	2.5 kV
	150 V	III	2.5 kV
5000 m	150 V	II	1.5 kV
	100 V	III	1.5 kV

- From an operating height of 2000 m the max. permitted ambient temperature is reduced by 0.5 °C/100 m

Operating height	Permitted ambient temperature
3000 m	50 °C
4000 m	45 °C
5000 m	40 °C

11.3 Categories

11.3.1 Safety level

The maximum achievable safety level depends on the encoder, the wiring and the operating mode of the PNOZ s30.



INFORMATION

The safety-related characteristic data of the PNOZ s30 and all other devices that are used must be taken into account when calculating the safety level. We recommend that you use the PAScal software tool to calculate the safety function's SIL/PL values.

The safety assessments below only consider the subsystems *Sensor* and *PNOZ s30*. The *Actuator* subsystem depends on the application and must also be considered in the overall assessment.

Information on the safety-related characteristic data for the subsystems *Sensor* and *PNOZ s30*

Example:

Sensor subsystem			**PNOZ s30 subsystem**	
Category	**MTTFd**	**DC**	**Operating mode**	**PFH [1/h]**
2	Manufacturer-specific	90 %	Monitoring 1 encoder	2,88E-08

The values for *Category* and *DC* can be set for the sensor subsystem, bearing in mind the restrictions stated in the respective chapter. The MTTFd value must be stated by the device manufacturer.

Assuming that all errors are dangerous, MTTF = MTTFd can be set.
The characteristic data MTTF is a property of the sensor, which can only be stated by the manufacturer.

Forced dynamisation:
When monitoring sensors with square output signals (TTL, HTL) or safe sensors, the axis must be moved within 8 hours so that the signal changes on all the connected tracks.

Statement:
SRP/CS = Safety-related part of a control system (EN 13849-1, Tab. 2)

11.3.2 Safety functions

The following safe monitoring functions are available:

- Standstill
- Position
- Speed
- Speed range
- Direction
- Monitoring for broken shearpins

The safety functions of the PNOZ s30 are monitoring functions, whereby a safe output signal is used to show if defined limit values are exceeded.

The reaction function that takes place (e.g. shutting down the drive, activating a mechanical brake) when exceeded limit values are detected during the normal operation of the safety function must be defined and implemented by the machine/plant developer and does not form part of the PNOZ s30.

The monitoring function of the PNOZ s30 can be used to implement safety functions defined in the standard EN 61800-5-2 for Adjustable speed electrical power drive systems.

Safety functions in accordance with EN 61800-5-2	Implementation with PNOZ s30 safety function
Safe Operating Stop (SOS)	Standstill, position
Safely Limited Speed (SLS)	Speed
Safe Speed Range (SSR)	Speed range
Safe Direction (SDI)	Direction
Safe Speed Monitor (SSM)	Speed, speed range

11.3.3 Safety-related characteristic data for operation with non-safety-related rotary encoder without additional requirements

11.3.3.1 Permitted encoder types and output signals

Permitted encoder types:

- Rotary non-safety-related encoders
- Linear non-safety-related encoders

Permitted output signals:

- Square output signals TTL, single ended
- Square output signals TTL, differential
- Square output signals HTL, single ended
- Square output signals HTL, differential
- Sin/Cos output signals 1Vss, reference voltage
- Sin/Cos output signals 1Vss, differential

11.3.3.2 Safety-related architecture

To calculate the safety function you will need the following data for the "sensor" subsystem and "PNOZ s30" subsystem:

Sensor			PNOZ s30 subsystem	
Category	**MTTFd**	**DC**	**Operating mode**	**PFH (1/h)**
1*	Manufacturer-specific	0 %	Monitoring 1 encoder	2,88E-08

*In accordance with EN ISO 13849-1, Category 1 is only met if the sensor is a "well-tried component".

The values for ***DC*** refer to the standard EN 61508.

11.3.3.3 Achievable safety level

Safety function	PL in accordance with EN ISO 13849-1: 2015	SIL CL in accordance with EN IEC 62061
Speed Speed range Direction Standstill Position	PL c (Cat. 1)	-

11.3.4 Safety-related characteristic data for operation with non-safety-related rotary encoder with mechanical fault exclusion

In accordance with EN 61800-5-2 : 2007, Table D.16 (Motion and position feedback sensors), fault exclusions are permitted for faults in the mechanical connection between the sensor (encoder) and motor.

11.3.4.1 Permitted encoder types and output signals

Permitted encoder types:

- Rotary non-safety-related encoders

Permitted output signals:

- Sin/Cos output signals 1Vss, reference voltage
- Sin/Cos output signals 1Vss, differential



NOTICE

The signal tracks Cos and Sin must be generated independently. This means that the sine and cosine signals in the encoder must be conducted in independent channels, from the optics to the interface.

The two signal tracks must not be generated by a common processor

One signal may not be derived from the other signal via an electronic circuit.

11.3.4.2 Safety-related architecture

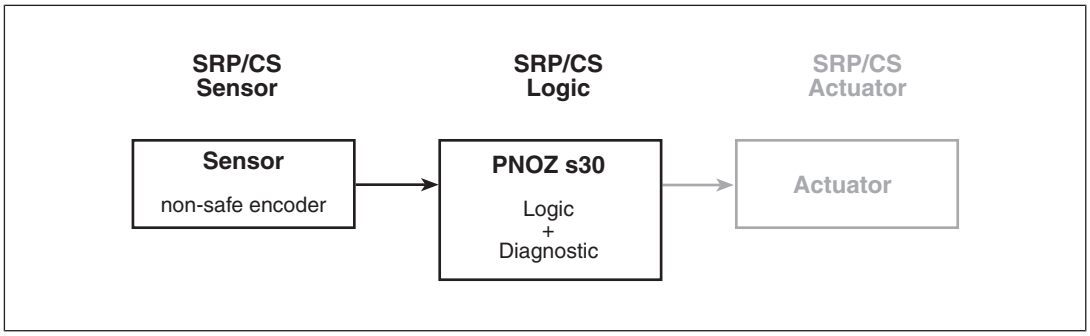

To calculate the safety function you will need the following data for the "sensor" subsystem and "PNOZ s30" subsystem:

Sensor			PNOZ s30 subsystem	
Category	**MTTFd**	**DC**	**Operating mode**	**PFH (1/h)**
2	Manufacturer-specific	90 %	Monitoring 1 encoder	2,88E-08

The values for ***DC*** refer to the standard EN 61508.

11.3.4.3 Achievable safety level

Safety function	PL in accordance with EN ISO 13849-1: 2015	SIL CL in accordance with EN IEC 62061
Speed Speed range Direction Standstill Position	PL d (Cat. 2)	2

11.3.5 Safety-related characteristic data for operation with non-safety-related rotary encoder with diagnostics via the drive controller

The detection of encoder errors (diagnostics for the sensor subsystem via the evaluation device) can be supplemented with a drive controller.

11.3.5.1 Permitted encoder types and output signals

Permitted encoder types:

- Rotary non-safety-related encoders
- Linear non-safety-related encoders

Permitted output signals:

- Square output signals TTL, single ended
- Square output signals TTL, differential
- Square output signals HTL, single ended
- Square output signals HTL, differential

- Sin/Cos output signals 1Vss, reference voltage
- Sin/Cos output signals 1Vss, differential

11.3.5.2 Requirements of the drive controller

- Parameters for the control loops and motor control must be set in such a way as to guarantee stabile operation.
  Drag error detection (see below) must be capable of operating in accordance with the requirements of the safety function.
- The motor must be operated with a current impressing control procedure, based on the rotor position (field-oriented control). If the analogue track signals are idle, field-oriented control will brake and/or stop the rotor.
- The drive controller must be in position control operating mode.
- If a maximum error variable is exceeded (set/true comparison) the drive controller must switch to a fault condition and stop the drive (drag error detection). The error reaction to drag error detection should be a controlled motor stop.
- Fault detection via the error variable with subsequent shutdown must meet the requirements of the safety function, with regard to reaction times for example.
- The drive controller must evaluate the same incremental/sincos signals from the encoder for control as are processed by the safe evaluation device (important on encoders with combined analogue/digital interface).

11.3.5.3 Safety-related architecture

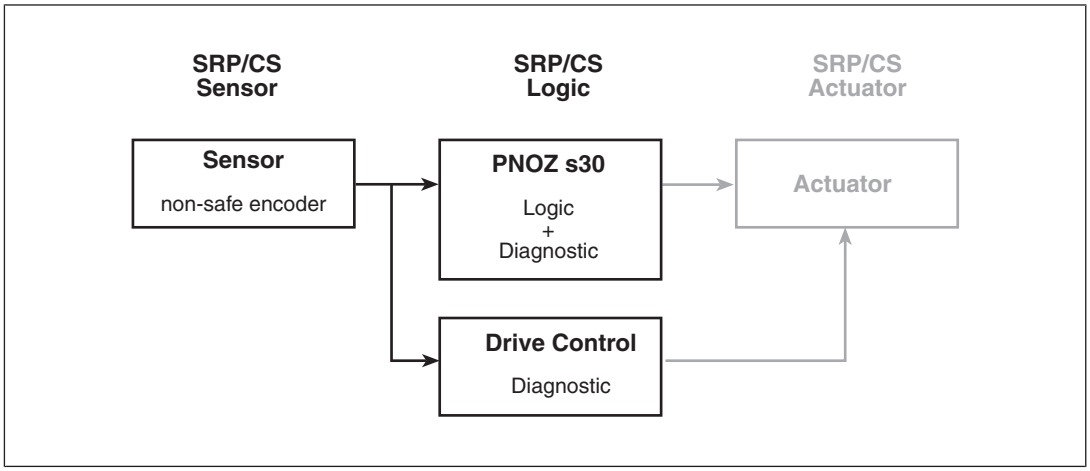

To calculate the safety function you will need the following data for the "sensor" subsystem and "PNOZ s30" subsystem:

Sensor			PNOZ s30 subsystem	
Category	**MTTFd**	**DC**	**Operating mode**	**PFH (1/h)**
2	Manufacturer-specific	90 %	Monitoring 1 encoder	2,88E-08

The values for ***DC*** refer to the standard EN 61508.

11.3.5.4 Achievable safety level

Safety function	PL of EN ISO 13849-1: 2015	SIL CL in accordance with EN IEC 62061
Speed Speed range Direction Standstill Position	PL d (Cat.2)	2

The values for ***DC*** refer to the standard EN 61508.

11.3.6 Safety-related characteristic data for operation with a safe rotary encoder

Safe encoders are certified in accordance with EN 61508, EN 13849 and EN 62061. In order to achieve the safety level stated by the encoder, the safe evaluation device (PNOZ s30) must normally detect designated errors. Details of the safe encoder's requirements of the evaluation device can be found in the user documentation for the safe encoder. The encoder and evaluation device must be compatible.

11.3.6.1 Permitted encoder types and output signals

Permitted encoder types:

- Rotary safe encoder
- Linear safe encoder

Permitted output signals:

- Sin/Cos output signals 1Vss, reference voltage
- Sin/Cos output signals 1Vss, differential

11.3.6.2 Safety-related architecture

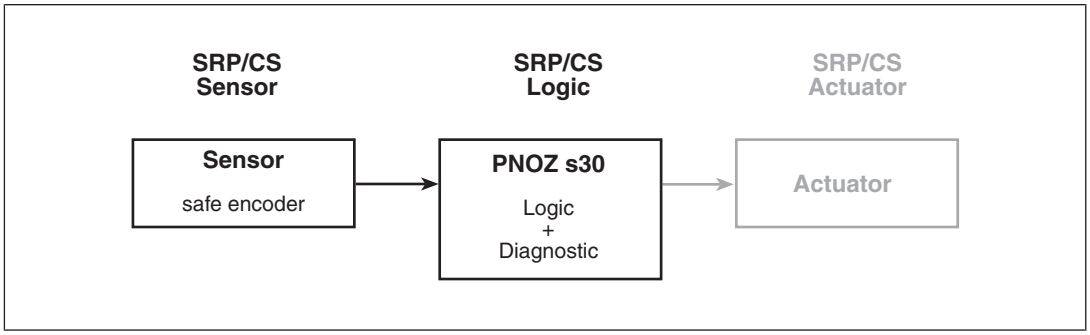

To calculate the safety function you will need the following data for the "sensor" subsystem and "PNOZ s30" subsystem:

Sensor			PNOZ s30 subsystem	
PL	**SIL**	**PFH (1/h)**	**Operating mode**	**PFH (1/h)**
See manufacturer			Monitoring safe encoder	3,08E-09

11.3.6.3 Achievable safety level

Safety function	PL in accordance with EN ISO 13849-1: 2015	SIL CL in accordance with EN IEC 62061
Speed Speed range Direction Standstill Position	PL e (Cat.4)	3

11.3.7 Safety-related characteristic data for operation with a safe rotary encoder with Z index

Safe encoders are certified in accordance with EN 61508, EN 13849 and EN 62061. In order to achieve the safety level stated by the encoder, the safe evaluation device (PNOZ s30) must normally detect designated errors. Details of the safe encoder's requirements of the evaluation device can be found in the user documentation for the safe encoder. The encoder and evaluation device must be compatible.

11.3.7.1 Permitted encoder types and output signals

Permitted encoder types:

- Rotary safe encoder
- Linear safe encoder

Permitted output signals:

- Square output signals TTL, differential with Z index
- Square output signals HTL, differential with Z index
- Sin/Cos output signals 1Vss, reference voltage with Z index
- Sin/Cos output signals 1Vss, differential with Z index

11.3.7.2 Safety-related architecture

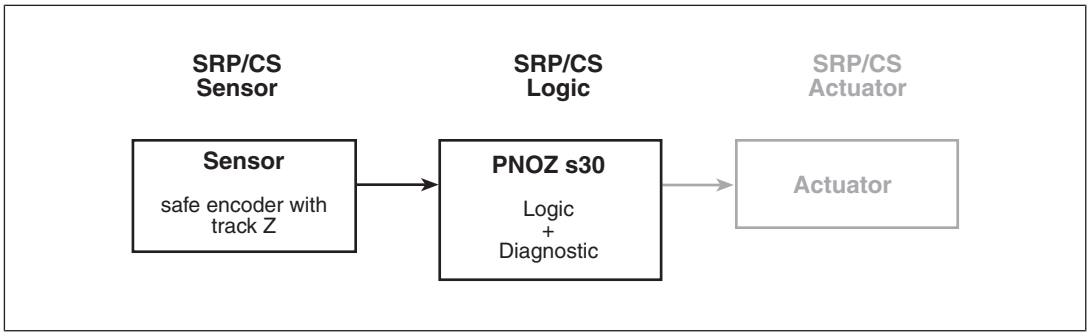

To calculate the safety function you will need the following data for the "sensor" subsystem and "PNOZ s30" subsystem:

Sensor			PNOZ s30 subsystem	
PL	**SIL**	**PFH (1/h)**	**Operating mode**	**PFH (1/h)**
See manufacturer			Monitoring 2 encoder	1,74E-09

11.3.7.3 Achievable safety level

Safety function	PL in accordance with EN ISO 13849-1: 2015	SIL CL in accordance with EN IEC 62061
Speed Speed range Direction Standstill Position	PL e (Cat.4)	3

11.3.8 Safety-related characteristic data for operation with non-safety-related rotary encoder and proximity switch

The speed monitoring of the non-safety-related encoder can be verified via an additional reference sensor.

11.3.8.1 Permitted encoder types and output signals

Non-safety-related rotary encoder

Permitted encoder types:

- Rotary non-safety-related encoders
- Linear non-safety-related encoders

Permitted output signals:

- Square output signals TTL, single ended
- Square output signals TTL, differential
- Square output signals HTL, single ended
- Square output signals HTL, differential

- Sin/Cos output signals 1Vss, reference voltage
- Sin/Cos output signals 1Vss, differential

Reference sensor

Permitted encoder types:

- Rotary non-safety-related encoders
- Linear non-safety-related encoders
- Inductive proximity switches

Permitted output signals:

- Square output signals HTL, single ended
- Square output signal 24 V, pnp

11.3.8.2 Safety-related architecture

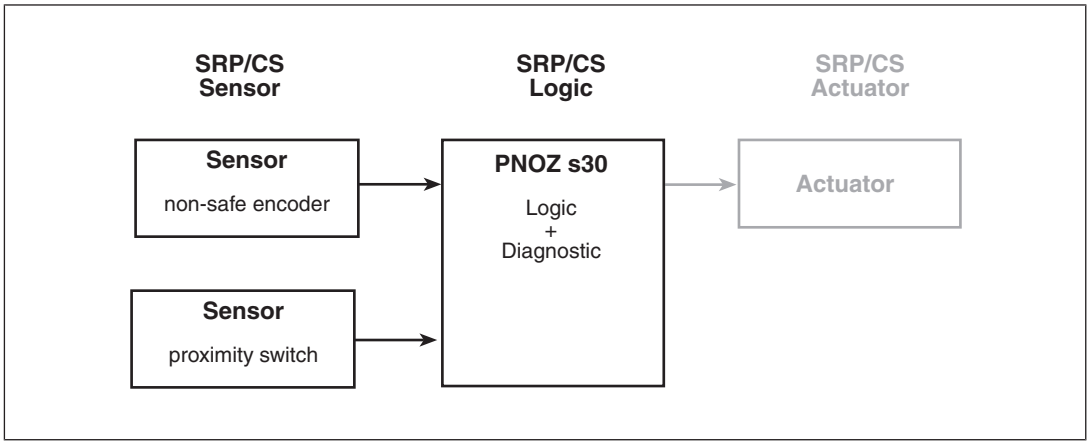

To calculate the safety function you will need the following data for the "sensor" subsystem and "PNOZ s30" subsystem:

Sensor			PNOZ s30 subsystem	
Category	**MTTFd**	**DC**	**Operating mode**	**PFH (1/h)**
4	Manufacturer-specific	90 %	Monitoring 2 encoder	1,74E-09

In a worst case scenario, the sensor subsystem's characteristic value MTTFd is calculated from the inferior (lower) value of the two sensors.

The values for ***DC*** refer to the standard EN 61508.

11.3.8.3 Achievable safety level

Safety function	PL in accordance with EN ISO 13849-1: 2015	SIL CL in accordance with EN IEC 62061
Direction Position	PL c (Cat. 1)	-
Speed Speed range Standstill	PL e (Cat.4)	3

Please note:

For the "sensor" subsystem, a minimum speed must be exceeded within forced dynamisation.

The minimum speed depends on the ratio of the frequency at tracks AB "f_{AB}" to the frequency at track Z "f_Z" in your configuration (***fAB/fZ Verh.*** setting in the menu) and is calculated as follows:

- when ***fAB/fZ Verh.*** ≥ 1.0
  f_Z = 10 mHz or $f_{AB} = (f_{AB}/f_Z)$ *x* 10 mHz
- when f_{AB}/f_Z ***Verh.*** < 1.0
  f_{AB} = 10 mHz or f_Z = 10 mHz/(f_{AB}/f_z)

At the very latest, a feasibility error will be detected when a tolerance expires. The tolerance level depends on the ratio of the frequency at tracks AB "f_{AB}" to the frequency at track Z "f_Z" in your configuration (***fAB/fZ Verh.*** setting in the menu) and is calculated as follows:

- when ***fAB/fZ Verh.*** ≥ 1.0
  7.5 Z-pulses or 7.5 x (f_{AB}/f_Z) AB-pulses
- when ***fAB/fZ Verh.*** < 1.0
  4.5 AB-pulses or $4.5/(f_{AB}/f_Z)$ Z-pulses

11.3.9 Safety-related characteristic data for operation with 2 proximity switches

11.3.9.1 Permitted encoder types and output signals

Non-safety-related rotary encoder

Permitted encoder types:

- Inductive proximity switches

Permitted output circuits:

- pnp
- npn

11.3.9.2 Safety-related architecture

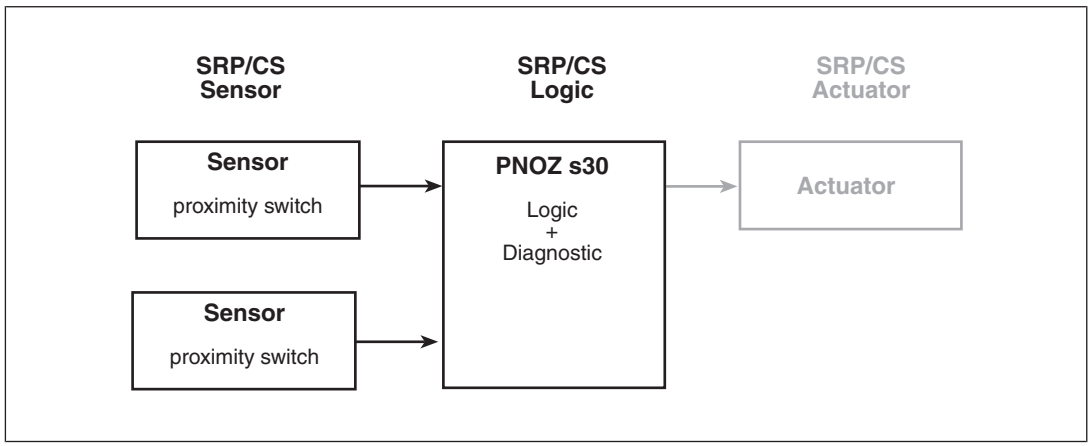

To calculate the safety function you will need the following data for the "sensor" subsystem and "PNOZ s30" subsystem:

Sensor			PNOZ s30 subsystem	
Category	**MTTFd**	**DC**	**Operating mode**	**PFH (1/h)**
4	Manufacturer-specific	90 %	Monitoring 2 encoder	1,74E-09

In a worst case scenario, the sensor subsystem's characteristic value MTTFd is calculated from the inferior (lower) value of the two sensors.

The values for ***DC*** refer to the standard EN 61508.

11.3.9.3 Achievable safety level

Safety function	PL in accordance with EN ISO 13849-1: 2015	SIL CL in accordance with EN IEC 62061
Direction Position	-	-
Speed Speed range Standstill	PL e (Cat.4)	3

Please note:
Common cause failures (CCF) are possible for the sensor subsystem. An appropriate analysis must be carried out.

To use proximity switches 1 and 2 we recommend that you:

- Use different technologies/design or physical principles (e.g. different manufacturers) and
- Evaluate the encoder supply via track S

11.4 Examples

11.4.1 Connection of proximity switch

11.4.1.1 Features

PNOZ s30

- Standstill monitoring for enabling the safety gate via Rel. 1:
  Standstill is detected at <= 2 Hz, the output Rel. 1 switches on and the safety gate can be released with the pushbutton S3.
- Monitoring for overspeed via Rel. 2:
  Overspeed is detected at >= 500 Hz and the output Rel. 2 switches off.
- Feedback loop monitoring for Rel.1 via feedback loop input Y1,
  Feedback loop monitoring for Rel.2 via feedback loop input Y2
- Automatic reset

Encoder

The measured values are detected by two proximity switches (pnp).

PNOZ s4

- Safety gate monitoring

11.4.1.2 Configuration overview

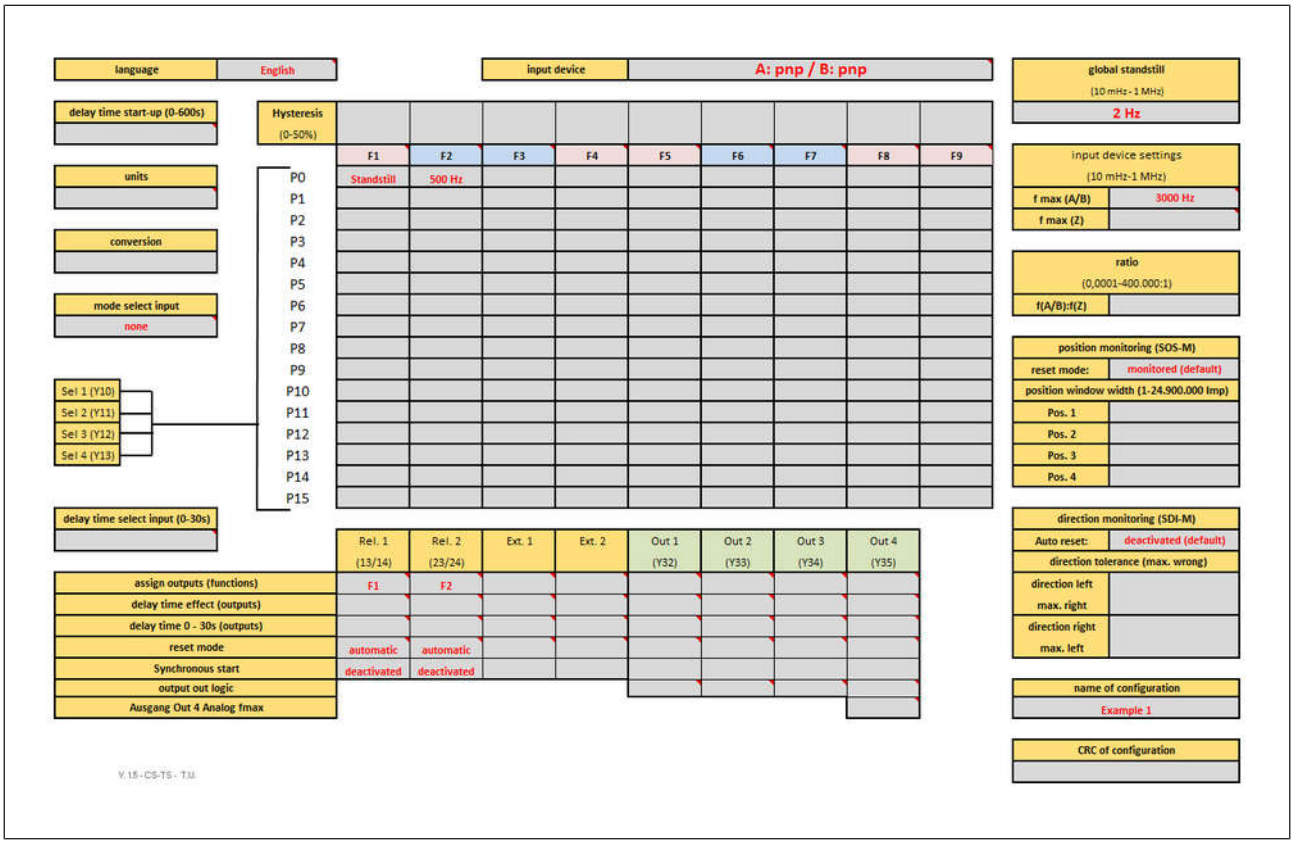

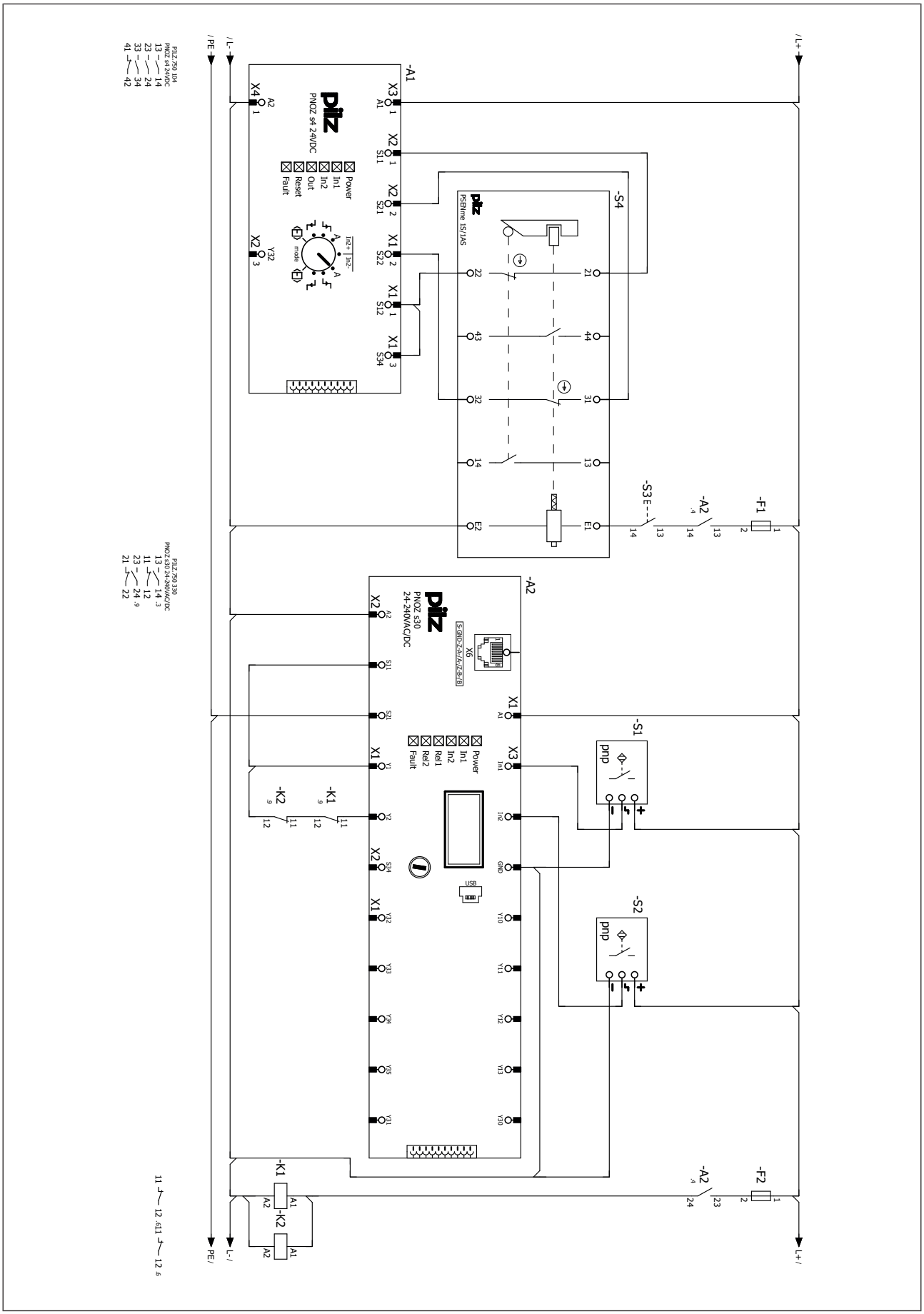
PILZ.750 104
PNOZ s4 24VDC
13 14
23 24
33 34
41 42
PILZ.750 330
PNOZ s30 24-240VAC/DC
13 14
11 12
23 24
21 22
-A1
PNOZ s4 24VDC
Power
In1
In2
Out
Reset
Fault
-S4
PSENme 1S/1AS
-A2
PNOZ s30
24-240VAC/DC
Power
In1
In2
Rel1
Rel2
Fault
USB
-S1
-S2
-S3
-F1
-F2
-K1
-K2
/ PE
/ L-
/ L+
PE /
L- /
L+ /

11.4.2 Incremental encoder connection

11.4.2.1 Features

PNOZ s30

- Speed monitoring:
  Monitoring for overspeed for the operating modes "Setup" and "Automatic", which are selected with the switch S1.
  - The operating mode "Setup" is selected if the select input SEL1 is activated. Overspeed is detected during setup at >= 50 Hz and the output Rel. 2 switches off.
  - The operating mode "Automatic" is selected if the select input SEL2 is activated. Overspeed is detected during automatic mode at >= 3000 Hz and the output Rel. 2 switches off.
  - If a speed of 2800 Hz is exceeded, the semiconductor output Out1 switches in automatic mode and a message (advance warning) is output via the PLC.
- Standstill monitoring:
  Standstill is detected at <= 2 Hz for both operating modes and the output Rel. 1 switches on.
- Feedback loop monitoring via feedback inputs Y1 and Y2

Encoder:

The measured values are detected by an incremental encoder (sin/cos)

11.4.2.2 Configuration overview

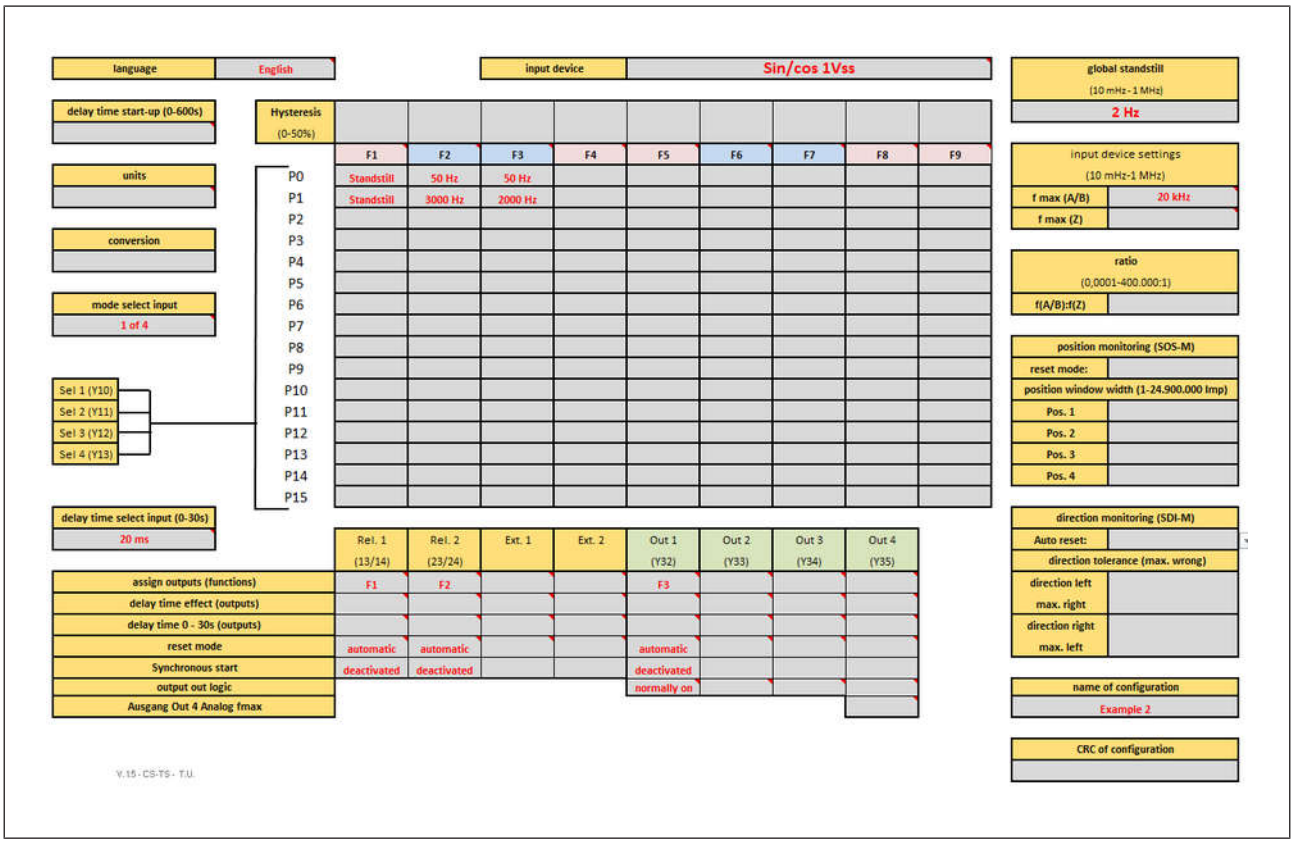

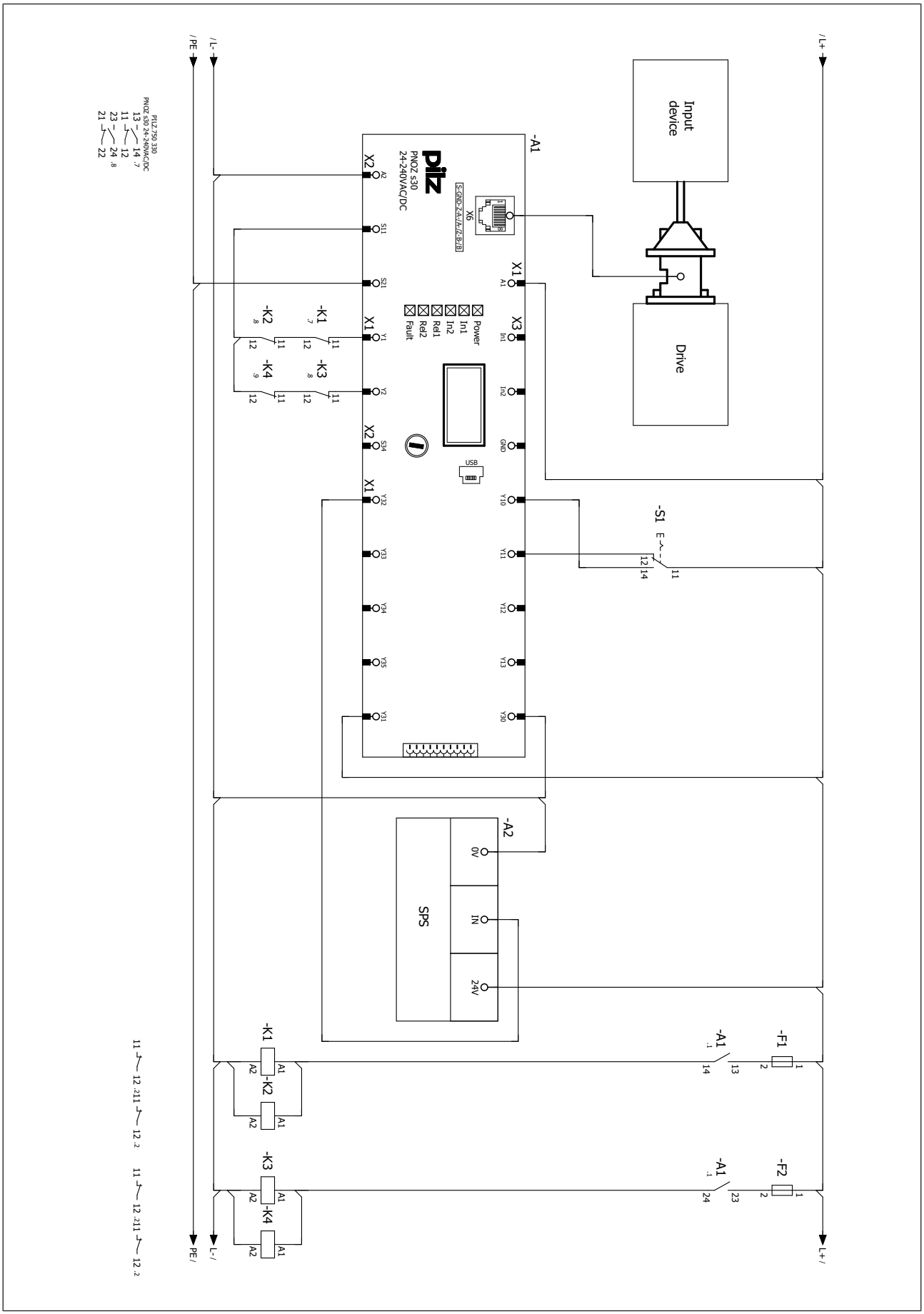
/ L+
/ L-
/ PE
Input device
Drive
-A1
PNOZ s30
24-240VAC/DC
X1
X2
X3
X6
S-GND-ZA-/A-/Z-B/-B
Power
In1
In2
Rel1
Rel2
Fault
USB
-K1
-K2
-K3
-K4
-S1
-A2
SPS
0V
IN
24V
-F1
-F2
PILZ 750 330
PNOZ s30 24-240VAC/DC
L+ /
L- /
PE /

12 Order reference

12.1 Product

Product type	Features	Terminals	Order No.
PNOZ s30	24 - 240 VAC/DC	With screw terminals	750 330
PNOZ s30 C	24 - 240 VAC/DC	With spring-loaded terminals	751 330

12.2 Accessories

Chip card accessories

Product type	Features	Order no.
PNOZsigma Chip Card manager set	Set consisting of the PNOZ Chip Card Reader and SmartCardCommander with SIM card adapter (779 230 and 750 031)	750 030
SmartCardCommander with SIM card adapter	Software for the chip card reader 779 230, for saving the configuration on the computer	750 031
PNOZmulti Chipcard Set	Chip card, 8 kB, x10	779 200
PNOZmulti Chipcard	Chip card, 8 kB	779 201
PNOZmulti Chipcard	Chip card, 32 kB	779 211
PNOZmulti Chipcard Set	Chip card, 32 kB, x10	779 212
PNOZ Chip Card Reader	Chip card reader for saving the configuration on the computer	779 230
Chipcard Holder	Chip card holder	779 240
PNOZmulti Seal	Chip card seal, x10	779 250

Terminals

Product type	Features	Order no.
PNOZ s Set3 Screw Loaded Terminals	Set of plug-in screw terminals, x1	750 014
PNOZ s Set3 Spring Loaded Terminals	Set of plug-in spring terminals, x1	751 014

Terminator

Product type	Features	Order no.
PNOZ s terminator plug (10 pieces)	Connector for terminating a PNOZsigma base unit or PNOZsigma expansion module, 10 pieces	750 010

Cable

Product type	Features	Order no.
PNOZ msi1Ap	Adapter and cable 25-pin, 2.5 m	773 840
PNOZ msi1Ap	Adapter and cable 25-pin, 5.0 m	773 844
PNOZ msi1Bp	Adapter and cable 25-pin, 2.5 m	773 841
PNOZ msi1Bp	25-pin, 5.0 m	773 839
PNOZ msi3Ap	Adapter and cable 15-pin, 2.5 m	773 842
PNOZ msi3Bp	Adapter and cable 15-pin, 2.5 m	773 843
PNOZ msi5p	Adapter and cable Bos/Rex 15-pin, 2.5 m	773 857
PNOZ msi5p	Adapter and cable Bos/Rex 15-pin, 1.5 m	773 858
PNOZ msi6p	Adapter and cable Elau 9-pin, 7.5 m	773 859
PNOZ msi6p	Adapter and cable Elau 9-pin, 2.5 m	773 860
PNOZ msi6p	Adapter and cable Elau 9-pin, 1.5 m	773 861
PNOZ msi7p	Adapter and cable SEW 15-pin, 2.5 m	773 864
PNOZ msi7p	Adapter and cable SEW 15-pin, 1.5 m	773 865
PNOZ msi8p	Adapter and cable Lenze 9-pin, 2.5 m	773 862
PNOZ msi8p	Adapter and cable Lenze 9-pin, 1.5 m	773 863
PNOZ msi9p	Adapter cable 5.0 m	773 856
PNOZ msi10p	Adapter cable 2.5 m	773 854
PNOZ msi11p	Adapter cable 1.5 m	773 855
PNOZ msi12p	Adapter cable 2.5 m	773 868
PNOZ msi13p	Adapter cable 2.5 m	773 869
PNOZ msi14p	Adapter cable 2.5 m	773 878
PNOZ msi15p	Adapter cable 2.5 m	773 874
PNOZ msi16p	Adapter cable 2.5 m	773 867
PNOZ msi17p	Adapter cable 5.0 m	773 875
PNOZ msi18p	Adapter cable 1.5 m	773 888
PNOZ msi19p	Connection cable, 1.5 m	773 846
PNOZ msi19p	Connection cable, 2.5 m	773 847
PNOZ msi20p	Connection cable, 2.5 m	773 879
PNOZ msi21p	Connection cable, 1.5 m	773 886
PNOZ msi21p	Connection cable, 2.5 m	773 885
PNOZ msi b4 Box	Connection box	773 845
PNOZ msi S09	9-pin adapter, connector set	773 870
PNOZ msi S15	15-pin adapter, connector set	773 871
PNOZ msi S25	25-pin adapter, connector set	773 872
PNOZ msi S25	25-pin adapter, connector set	773 872

Product type	Features	Order no.
PNOZ s30 USB configuration cable	USB cable for downloading the configuration from PNOZ s30 to PNOZsigma Configurator and vice versa	750 040

Support

Technical support is available from Pilz round the clock.

Americas
Brazil
+55 11 97569-2804
Canada
+1 888-315-PILZ (315-7459)
Mexico
+52 55 5572 1300
USA (toll-free)
+1 877-PILZUSA (745-9872)

Asia
China
+86 21 60880878-216
Japan
+81 45 471-2281
South Korea
+82 31 450 0680

Australia
+61 3 95600621

Europe
Austria
+43 1 7986263-0
Belgium, Luxembourg
+32 9 3217575
France
+33 3 88104000
Germany
+49 711 3409-444
Ireland
+353 21 4804983
Italy, Malta
+39 0362 1826711
Scandinavia
+45 74436332
Spain
+34 938497433
Switzerland
+41 62 88979-30
The Netherlands
+31 347 320477
Turkey
+90 216 5775552
United Kingdom
+44 1536 462203

You can reach our international hotline on:
+49 711 3409-444
support@pilz.com

Pilz develops environmentally-friendly products using ecological materials and energy-saving technologies. Offices and production facilities are ecologically designed, environmentally-aware and energy-saving. So Pilz offers sustainability, plus the security of using energy-efficient products and environmentally-friendly solutions.

Energy saving by Pilz

BLUECOMPETENCE Alliance Member
Partner of the Engineering Industry Sustainability Initiative

Partner of: The Best of German Engineering

Pilz GmbH & Co. KG
Felix-Wankel-Straße 2
73760 Ostfildern, Germany
Tel.: +49 711 3409-0
Fax: +49 711 3409-133
info@pilz.com
www.pilz.com

PILZ
THE SPIRIT OF SAFETY

1001715-EN-18, 2018-10 Printed in Germany
© Pilz GmbH & Co. KG, 2015

CMSE®, InduraNET p®, PAS4000®, PAScal®, PASconfig®, Pilz®, PIT®, PLID®, PMCprimo®, PMCprotego®, PMCtendo®, PMD®, PMI®, PNOZ®, Primo®, PSEN®, PSS®, PVIS®, SafetyBUS SafetyEYE®, SafetyNET p®, THE SPIRIT OF SAFETY® are registered and protected trademarks of Pilz GmbH & Co. KG in some countries. We would point out that product features m from the details stated in this document, depending on the status at the time of publication and the scope of the equipment. We accept no responsibility for the validity, accuracy and entirety of the text and graphics presented in this information. Please contact our Technical Support if you have any questions.