EUROSENSOR

EPTTE3100 PRESSURE/ TEMPERATURE SENSOR



- **Combined pressure and temperature measurement**
- **High strength, rugged stainless steel design**
- **Competitively priced**

The EPTTE3100 is a high quality all stainless steel combined pressure and temperature transducer, intended for use in the measurement of gases and liquids compatible with stainless steel.

The EPTTE3100 offers the combination of the well proven EPT3100 motor sport pressure transducer with the latest integrated temperature measurement technology and features an exposed temperature sensor for quick response time measurements.

With additional EMI / RFI protection, low static and thermal errors and high resistance to shock and vibration as standard, the EPTTE3100 assures trouble free operation at temperatures up to 125°C.

The EPTTE3100 piezo-resistive sensing element coupled with the latest ASIC circuitry, assures excellent accuracy, choice of high level outputs and long stability, protected within a rugged, stainless steel housing.

The EPTTE3100 high strength stainless steel construction contains no silicone oil and provides therefore excellent reliability which is backed by a one-year warranty.

Specifications	
Performance	
Accuracy	+/- 0.5% at RT
Non linearity	<0.15% FS
Repeatability	<0.1% FS
Stability (1 Year)	< ± 0.1 %
Temp.coefficient offset	<0.15 % FS / 10K
Temp.coefficient span	<0,15 %FS / 10K
Overrange pressure	up to 4x rated pressure
Burst pressure	up to 6x rated pressure
Pressure cycles	> 10 million
Pressure response time:	<1ms
Temperature range	-50 to +150° C
Accuracy	PT1000 class B
Temperature response time:	<10s
Environment	
Temperature	-40° to 125° C
Shock	1000 G, 11 msec., 1/2 Sine
Vibration	25 G peak, 20 to 2000 Hz
Sealing	IP 67
Electronics	
Excitation for output pressure:	4 = 10-32 VDC for 0.5 – 4.5 V Output 5 = 5 VDC for 0.5 – 4.5 V Output
Output temperature	PT1000
Current consumption	< 10 mA
Reverse voltage protection	Yes
Mechanics	
Housing	304 stainless steel
Wetted parts	17-4PH stainless steel, FVMQ70
Pressure port	see select table
Electrical connection	see select table
Weight	ca. 60 g

Dimensions

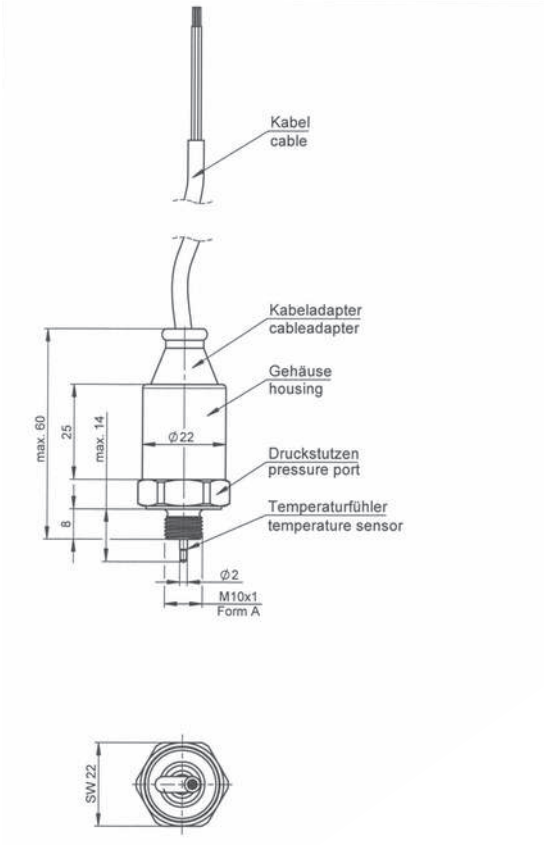

Electrical Connection	
red:	+ Supply
black:	- Supply
white:	Output Pressure
green:	Output Temperature
blue:	Output Temperature

* Color coding may vary, it will appear correctly on the sensor label



Ordering information

(Please use the characters in the chart below to create your product code)

Sample Code EPTTE3100 - M10x1 - 01000 - B - 4 - A

Port Configuration

C	1/8" NPT Male
M10x1	M10x1 Male

Measurement Range

The sensor is available up to 25 Bar

(Temperature: -50 to +150°C linear Output)

Pressure Unit

B	gauge pressure

Output signal

4	0,5...4,5 V
5	0.5...4.5 V ratiometric

Electrical Connection

A	600mm standard cable

*** Pressure ranges**

Bar	0.6	1.0	1.6	2.5	4	6	10	16	25
Order code	00060	00100	00160	00250	00400	00600	01000	01600	02500

The EPTTE3100 series is backed by a 1 Year Warranty. The purchaser is responsible for compatibility of the media, functional adequacy and correct installation of the transmitter.

The following models are typically available from stock: **EPTTE3100-C-01000-B-5-A**
EPTTE3100-m10x1-01000-B-4-A