Multi-Contact

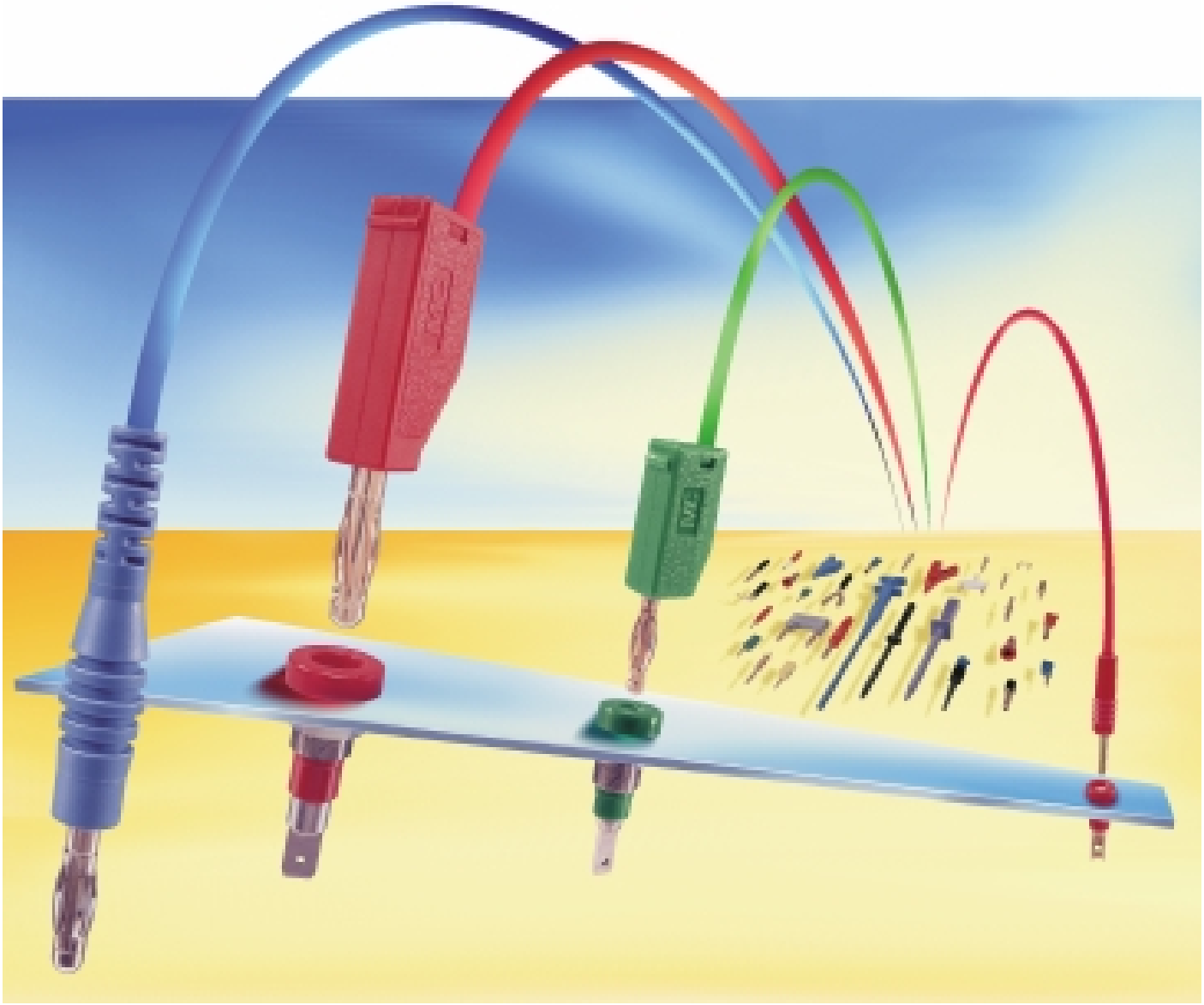

Connectors and Accessories

ø 0.5 mm - ø 4 mm

Connecting Leads, Plugs, Sockets, Adapters

Lab **1-4**

With this Lab 1-4 catalogue we present the complete MC® range of connectors for voltages up to max. 30 V_{AC} / 60 V_{DC}. With our proven Multilam technology and high-quality electroplating, they ensure dependable plug connections for a wide variety of applications.

Examples:

- ❑ **ø 0.5 mm to ø 2 mm connectors for construction of experimental electronic circuits**
- ❑ **ø 2 mm to ø 3 mm connectors for the instructional and hobby field (model-making)**
- ❑ **ø 4 mm connectors, compatible with the widely used plug connector system in the safety low-voltage range**

For connectors and test accessories for higher voltages up to 1000 V, CAT III, see our catalogue Lab Si, which presents the complete MC® product range "Safety Test Accessories".

MC® factories:





Multi-Contact AG Basel
Stockbrunnenrain 8 + 12
Postfach
4123 Allschwil 1
Tel.: (061) 306 55 55
Fax: (061) 306 55 56
http://www.multi-contact.com
E-mail:mailbox@multi-contact.com

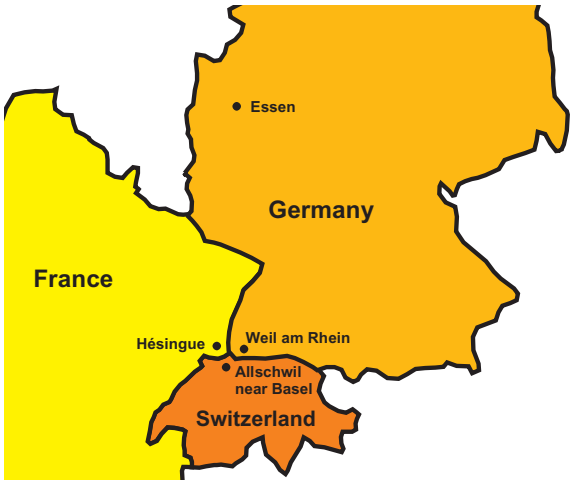

Multi-Contact Deutschland GmbH
Hegenheimer Strasse 19
Postfach 1606
79551 Weil am Rhein
Tel.: (07621) 667 - 0
Fax: (07621) 667 - 100
E-mail:mailbox@multi-contact.de

Multi-Contact France S.A.
4, rue de l'Industrie
B.P. 37
68221 Hésingue Cedex
Tel.: 03 89 67 65 70
Fax: 03 89 69 27 96
E-mail:info@multi-contact-france.fr

HCK-Messzubehör GmbH
Hövelstrasse 214
Postfach 12 01 64
45311 Essen
Tel.: (0201) 8 31 05-0
Fax: (0201) 8 31 05-99
E-mail:mce@multi-contact.com





Ordering Information	**Page**	**2**	
ø 0.5 – 2 mm Connectors	**Page**	**3 - 30**	
Connecting Leads ø 0.76 – ø 1.62 mm	Page	4 - 8	1
Connecting Plugs and Bridges 0.63 / ø 1 mm	Page	9 - 13	1
Insulated Miniature Press-in Sockets ø 0.76 – ø 1 mm	Page	14	1
Uninsulated Sockets ø 0.5 – ø 2 mm	Page	15 - 21	2
Uninsulated Plugs ø 0.76 – ø 2 mm	Page	22 - 26	2
Miniature Clips	Page	27 - 29	2
Touch-protected ø 1.5 mm Connecting System according to DIN 42802	Page	30	2
ø 2 – 3 mm Connectors and Accessories	**Page**	**31 - 58**	
Connecting Leads ø 2 / 2.3 / 3 mm	Page	32 - 39	3
Multilam Plugs ø 2 / 2.5 / 2.8 / 3 mm	Page	40 - 43	3
Connecting Plugs and Bridges ø 2 mm	Page	44 - 47	3
Test Probes and Clips ø 2 mm	Page	48 - 50	4
Press-in and Panel-mount Sockets / Binding Posts ø 2 mm	Page	51 - 55	4
Slide-in Rack Connectors / 2 Pole Connectors ø 2 mm	Page	56 - 58	4
ø 4 mm Connectors and Accessories	**Page**	**59 - 111**	
Connecting Leads ø 4 mm	Page	60 - 73	5
Plugs and Sockets ø 4 mm	Page	74 - 75	5
Multilam Plugs ø 4 mm	Page	76 - 85	5
Test Probes ø 4 mm	Page	86	6
Clips ø 4 mm	Page	87 - 88	6
Adapters and Adapter Leads ø 4 mm for Special Connections	Page	89 - 95	7
Connecting Plugs ø 4 mm	Page	96 - 100	7
Press-in and Panel-mount Sockets ø 4 mm	Page	101 - 108	8
Binding Posts ø 4 mm	Page	109 - 111	8
Adapters and Adapter Leads	**Page**	**112 - 117**	9
Kelvin Test Leads	**Page**	**118 - 122**	9
ESD Mounting Receptacles	**Page**	**123**	9
Single Core Multistrand Wires	**Page**	**124 - 126**	10
Insulation Stripping Pincers	**Page**	**127**	10
Hangers and Stands for Test and Connecting Leads	**Page**	**128 - 131**	11
Experimental Kits	**Page**	**132**	11
Special Designs	**Page**	**133**	12
Technical Information	**Page**	**134 - 137**	12
Index	**Page**	**138 - 139**	13

Order Code

When ordering, always state both the six- or nine digit order code and the product description.

Example:
Socket with solder connection B0,5, Order No. 41.0056

Colour Code

For those items available in various colours, replace the asterisk (*) with the appropriate colour code. The colour coding can be found at the bottom of each page.

Example:
Clip AGK40, red, Order No. 24.0154-22

Order Numbers and Component Part Numbers

Many articles have their own order number, but are also available broken down into their components.

Example:
Press-in socket EB4-F has Order No. 23.1023-*,
but its individual components can be ordered under
Socket B-EB4-F, Order No. 23.5042
and Insulating part I-EB4, Order No. 23.5013-*.

Supply of Component Parts

Many products from our range are also available in their component parts. If you are unable to find the appropriate description or order code for a specific item, e.g the nut for a particular socket, please contact us and we will be happy to advise on availability.

Delivery Period

Many products are available ex-stock. Additional assembly time may be required for those items not ex-stock. Lead times available on request.

Small Orders

We request that small value orders are placed with one of our distributors.

Standard and Special Designs

This catalogue details those assembled leads which are most commonly requested. We can of course manufacture to specific requests and are happy to quote for special designs. However, please contact us with regards to any additional special requirements such as alternative surface treatments.
About special design, *see also page 133*.

Lead Length

The lead length of all standard leads in this catalogue refers to the visible length of the cable.

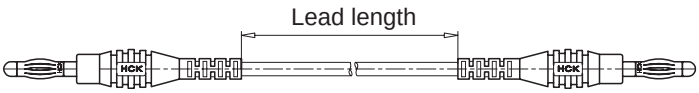

When ordering connecting leads, please note that the length of the lead is included in the stated article code.

Example:
Connecting lead FSL, 50 cm, green, Order No. 64.7290-05025

Colour Variations

Due to the use of different types of high-grade insulating materials, despite having the same colour code some of our articles may exhibit certain differences in colour (e.g. a silicone-insulated lead fitted with TPE-insulated plugs).

Self-Assembly

Some of the test leads available can be assembled by the user and, if necessary, are repairable. The description and order code for the component parts such as the plug, insulator and cable are shown underneath each item.

Assembly Instructions

Assembly instructions are available for all non-assembled items giving instructions on assembly and any tooling which may be required. These instructions are available on request. When ordering, please state the appropriate number which can be found directly next to the item (e.g. for item LK1,25-B please quote MA 145).

Responsibility of User

The user is responsible for ensuring that each product is used in an application for which it has been designed.

Copyright

The use of this catalogue for any other purpose, in whatever form, without our prior written consent is not permitted.

Technical Modifications

We have a policy of continuous improvement and reserve the right to make technical modifications to any product in accordance with any safety and technical developments.

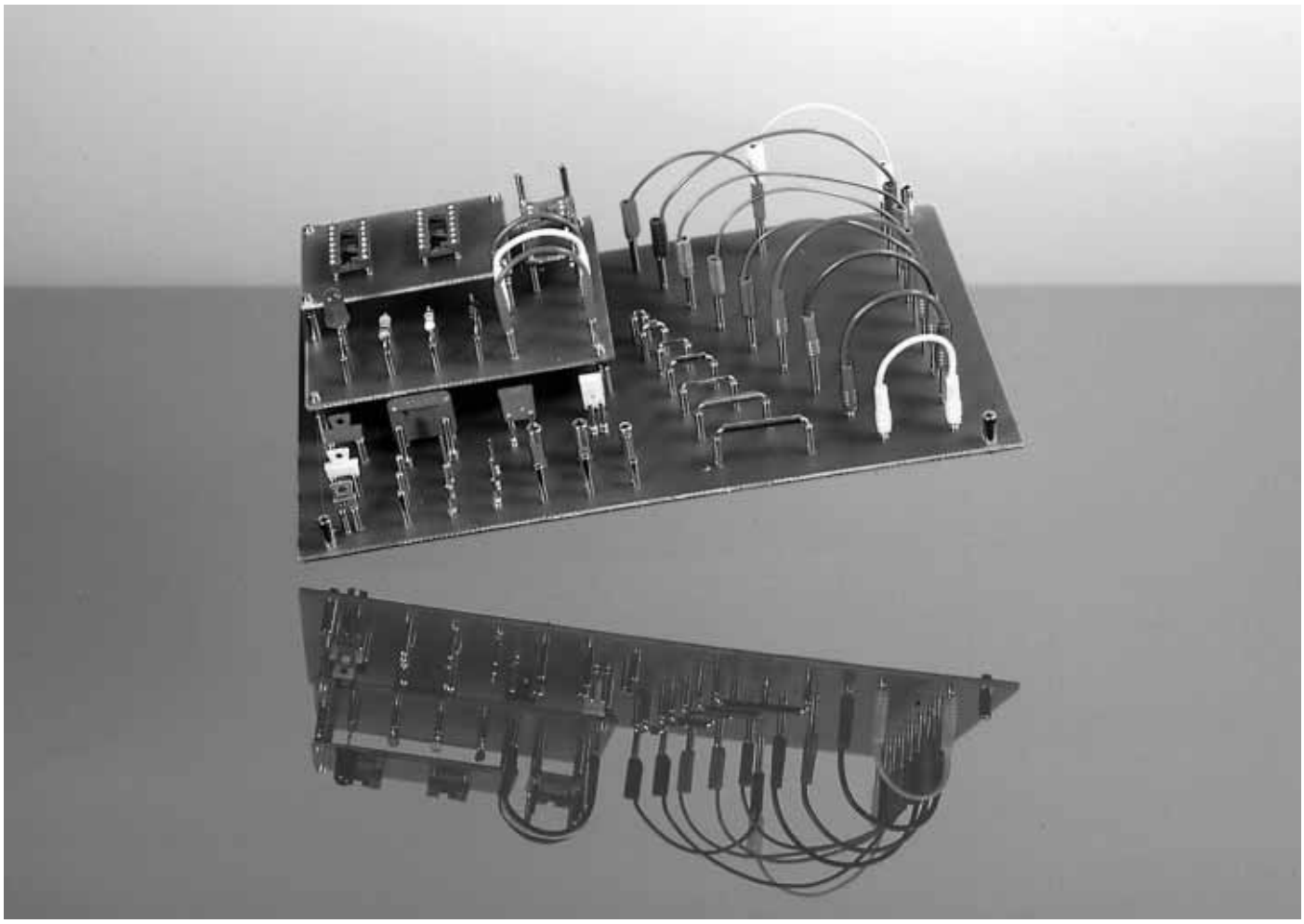

ø 0.5 mm - ø 2 mm connectors for voltages up to max. 30 V_{AC} / 60 V_{DC}

Our proven ø 0.5 mm - ø 2 mm contact elements are excellently suited for making reliable connections. Component wires, for instance, can be pushed directly into the appropriate miniature sockets.
The special contact elements for printed-circuit technology allow the realization of contacts in sandwich construction.

The miniature socket and plug bodies are turned from a copper alloy and electroplated with gold, silver or tin. The spring-loaded elements are fitted with MC® Multi-lams made from a hardened (gold-plated) copper alloy. Connecting leads and bridges and accessory components are available to fit the miniature sockets and plugs.

Connecting Leads
ø 0.76 mm
ø 1 mm
ø 1.25 mm
ø 1.5 mm
ø 1.62 mm



Pages 4 - 8

Insulated Miniature Press-in Sockets
ø 0.76 mm
and
ø 1 mm



Page 14

Miniature Clips



Pages 27 - 29

Connecting Plugs and Bridges
0.63 mm
and
ø 1 mm



Pages 9 - 13

Uninsulated Sockets and Plugs
ø 0.5 mm
up to
ø 2 mm

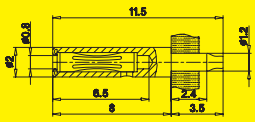

Pages 15 - 26

Touch-protected
ø 1.5 mm Connector System
according to DIN 42802



Page 30

*Colour code	**20** green-yellow	**21** black	**22** red	**23** blue	**24** yellow	**25** green	**26** violet	**27** brown	**28** grey	**29** white	**30** orange	**33** transparent

LK0,76-S:
Highly flexible connecting leads with ø 0.76 mm rigid plug on both ends. Suitable to ø 0.76 mm spring-loaded sockets.

PZ0,76:
Pincers made from refined steel with a special contour to hold the miniature connecting lead LK0,76-S insulation when closely connected.



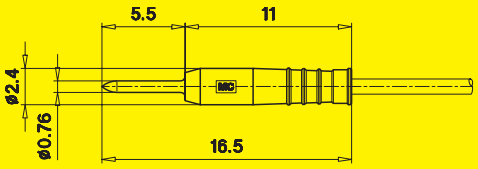

Type	LK0,76-S
Rated current	4 A
Lead cross section	0.17 mm²
Lead insulation	PVC
Lead operating temp.	-10°C ... +70°C
Insulation	PA
Insulation operating temperature	-40°C ... +80°C
Metal part, plating	hardened copper alloy, gold-plated
Standard colours*	21 - 25, 29
Standard lengths:	**Order No.**
2.5 cm	**28.0022-002***
4.5 cm	**28.0022-004***
5 cm	**28.0022-005***
10 cm	**28.0022-010***
12 cm	**28.0022-012***
15 cm	**28.0022-015***
20 cm	**28.0022-020***

Parts list / Pincers



KT0,76-S



PZ0,76 / Length 120 mm

Insulator	**KT0,76-S, Order No. 22.2210-***
Plug	**LS0,76-S, Order No. 22.1017**
Pincers, refined steel	**PZ0,76, Order No. 25.0025**
Multistrand wires, see pages 124 - 126.	**FLEXI-E/HK 0,17 (PVC), Order No. 60.7041-***
Assembly instructions on request !	MA 143

*Colour code	**20**	**21**	**22**	**23**	**24**	**25**	**26**	**27**	**28**	**29**	**30**	**33**
	green-yellow	black	red	blue	yellow	green	violet	brown	grey	white	orange	transparent

LK1-S:
Highly flexible connecting leads with ø 1 mm rigid plug on both ends. Suitable to ø 1 mm spring-loaded sockets.

AK1-B/1-S:
Highly flexible connecting lead or extension lead with ø 1 mm rigid plug and ø 1 mm spring-loaded socket.

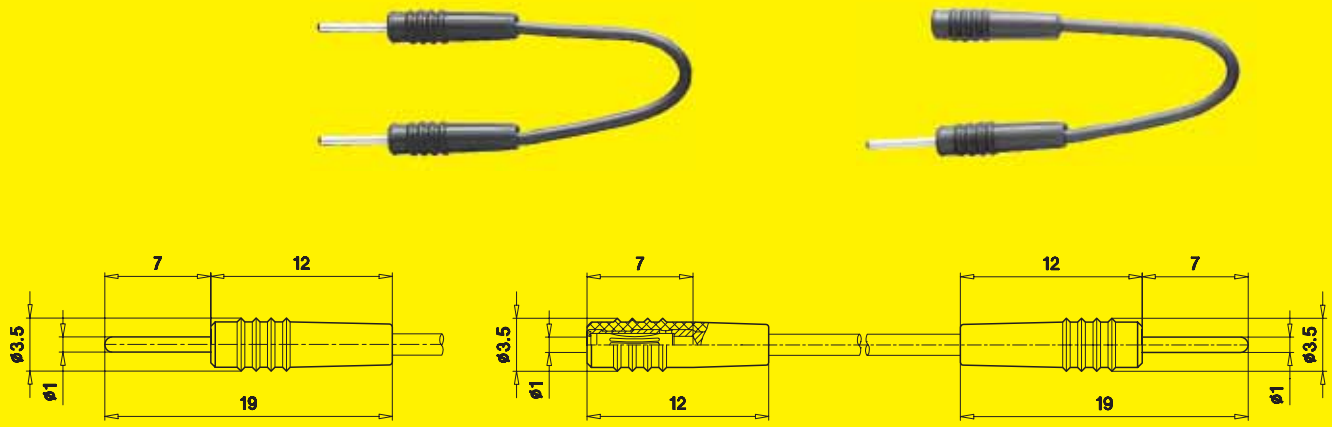

Type	LK1-S	AK1-B/1-S
Rated current	6 A	6 A
Contact resistance	–	1 mΩ (spring-loaded socket only)
Lead cross section	0.25 mm²	0.25 mm²
Lead insulation	PVC	PVC
Lead operating temp.	-10°C ... +70°C	-10°C ... +70°C
Insulation	PA	PA
Insulation operating temperature	-40°C ... +80°C	-40°C ... +80°C
Metal part, plating	brass, gold-plated	brass, gold-plated
	-Ⓐ-	-Ⓐ-
Standard colours*	21 - 29	21 - 29
Standard lengths:	**Order No.**	**Order No.**
7.5 cm	**28.0028-007***	**28.0008-007***
15 cm	**28.0028-015***	**28.0008-015***
30 cm	**28.0028-030***	**28.0008-030***
45 cm	**28.0028-045***	**28.0008-045***

Parts list



KT1-S | LS1-S | LS1-B LS1-S | KT1-S

Insulator	**KT1-S, Order No. 22.2070-***	**KT1-S, Order No. 22.2070-***
Plug	**LS1-S, Order No. 22.1007**	**LS1-S, Order No. 22.1007**
Socket	**–––**	**LS1-B, Order No. 22.1008**
Multistrand wires, see pages 124 - 126.	**FLEXI-E/HK 0,25 (PVC) Order No. 60.7013-***	**FLEXI-E/HK 0,25 (PVC) Order No. 60.7013-***
Assembly instructions on request !	MA 144	MA 144 + MA 145

*Colour code	**20** green-yellow	**21** black	**22** red	**23** blue	**24** yellow	**25** green	**26** violet	**27** brown	**28** grey	**29** white	**30** orange	**33** transparent

Highly flexible connecting leads with ø 1 mm rigid plug on both ends and ø 1 mm in-line spring-loaded sockets, therefore stackable. Easy assembly, without soldering.



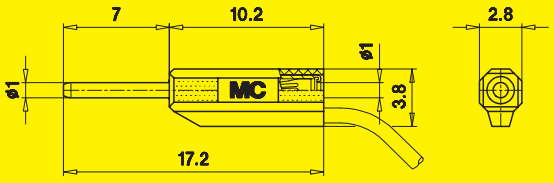

Type	LK1-A
Rated current	3 A
Contact resistance	1 mΩ
Lead cross section	0.127 mm^2
Lead insulation	PVC
Lead operating temp.	-10°C ... +70°C
Insulation	PA
Insulation operating temperature	-40°C ... +80°C
Metal part, plating	brass, gold-plated
Standard colours*	21 - 29
Standard lengths:	**Order No.**
7.5 cm	**28.0026-007***
15 cm	**28.0026-015***
30 cm	**28.0026-030***
45 cm	**28.0026-045***



KT1-A

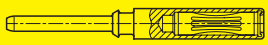

LS1-A

Insulator	**KT1-A, Order No. 22.2040-***
Plug	**LS1-A, Order No. 22.1019**
Multistrand wires, see pages 124 - 126.	**HK 0,127 (PVC), Order No. 22.0060-***
Assembly instructions on request !	MA 147

*Colour code	**20** green-yellow	**21** black	**22** red	**23** blue	**24** yellow	**25** green	**26** violet	**27** brown	**28** grey	**29** white	**30** orange	**33** transparent

Highly flexible extension leads with in-line spring-loaded sockets
on both ends for accepting ø 1 mm or ø 1.25 mm rigid plugs.

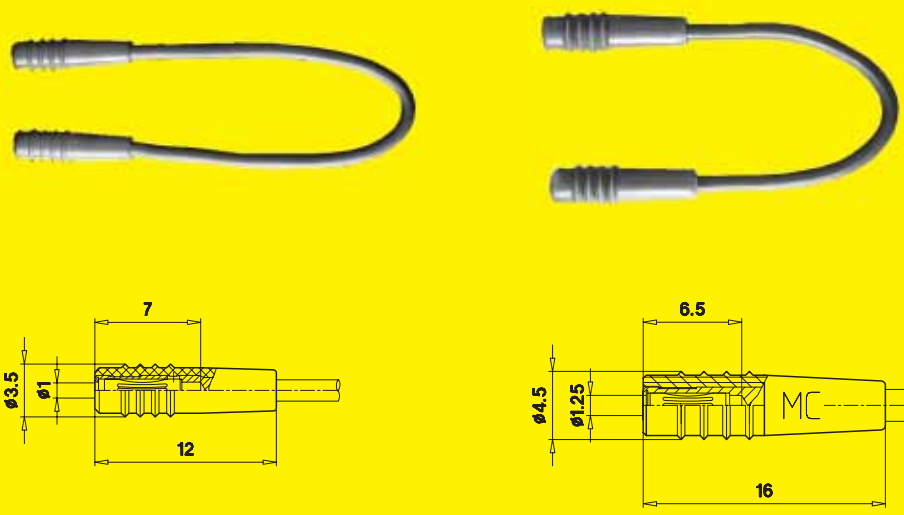

Type	LK1-B	LK1,25-B
Rated current	6 A	6 A
Contact resistance	1 mΩ	1 mΩ
Lead cross section	0.25 mm²	0.5 mm²
Lead insulation	PVC	PVC
Lead operating temp.	-10°C ... +70°C	-10°C ... +70°C
Insulation	PA	PA
Insulation operating temperature	-40°C ... +80°C	-40°C ... +80°C
Metal part, plating	brass, gold-plated	brass, gold-plated
Diameter Socket	ø 1 mm	ø 1.25 mm
	-A-	-A-
Standard colours*	21 - 29	21 - 29
Standard lengths:	**Order No.**	**Order No.**
7.5 cm	**28.0027-007***	**28.0023-007***
15 cm	**28.0027-015***	**28.0023-015***
30 cm	**28.0027-030***	**28.0023-030***
45 cm	**28.0027-045***	**28.0023-045***



KT1-S LS1-B KT2-S LS1,25-B

Insulator	**KT1-S, Order No. 22.2070-***	**KT2-S, Order No. 22.2010-***
Socket	**LS1-B, Order No. 22.1008**	**LS1,25-B, Order No. 22.1044**
Multistrand wires, see pages 124 - 126.	**FLEXI-E/HK 0,25 (PVC) Order No. 60.7013-***	**FLEXI-E/HK 0,50 (PVC) Order No. 60.7005-***
Assembly instructions on request !	MA 145	

*Colour code	**20** green-yellow	**21** black	**22** red	**23** blue	**24** yellow	**25** green	**26** violet	**27** brown	**28** grey	**29** white	**30** orange	**33** transparent

Highly flexible connecting leads with rigid plug on both ends.
Suitable to 1.5 mm bzw. ø 1.62 mm spring-loaded sockets.





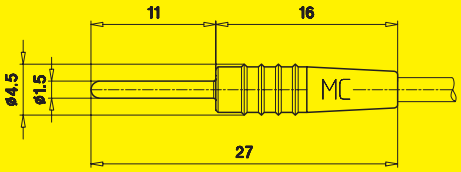

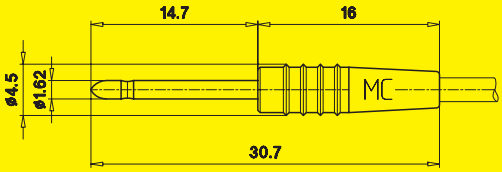

Type	LK1,5-S	LK1,62-S
Rated current	10 A	10 A
Lead cross section	0.5 mm²	0.5 mm²
Lead insulation	PVC	PVC
Lead operating temp.	-10°C ... +70°C	-10°C ... +70°C
Insulation	PA	PA
Insulation operating temperature	-40°C ... +80°C	-40°C ... +80°C
Metal part, plating	brass, gold-plated	brass, gold-plated
Diameter plug	ø 1.5 mm	ø 1.62 mm
	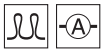	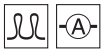
Standard colours*	21 - 29	21 - 29
Standard lengths:	**Order No.**	**Order No.**
7.5 cm	**28.0024-007***	**28.0025-007***
15 cm	**28.0024-015***	**28.0025-015***
30 cm	**28.0024-030***	**28.0025-030***
45 cm	**28.0024-045***	**28.0025-045***



KT2-S

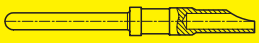

LS1,5-S

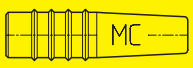

KT2-S



LS1,62-S

Insulator	**KT2-S, Order No. 22.2010-***	**KT2-S, Order No. 22.2010-***
Plug	**LS1,5-S, Order No. 22.5101**	**LS1,62-S, Order No. 22.5102**
Multistrand wires, see pages 124 - 126.	**FLEXI-E/HK 0,50 (PVC) Order No. 60.7005-***	**FLEXI-E/HK 0,50 (PVC) Order No. 60.7005-***
Assembly instructions on request !	MA 132	

*Colour code	**20** green-yellow	**21** black	**22** red	**23** blue	**24** yellow	**25** green	**26** violet	**27** brown	**28** grey	**29** white	**30** orange	**33** transparent

0.63 mm connecting plugs with insulated handle are made of brass, formed, 0.8 µm gold-plated. Different plug spacings available.

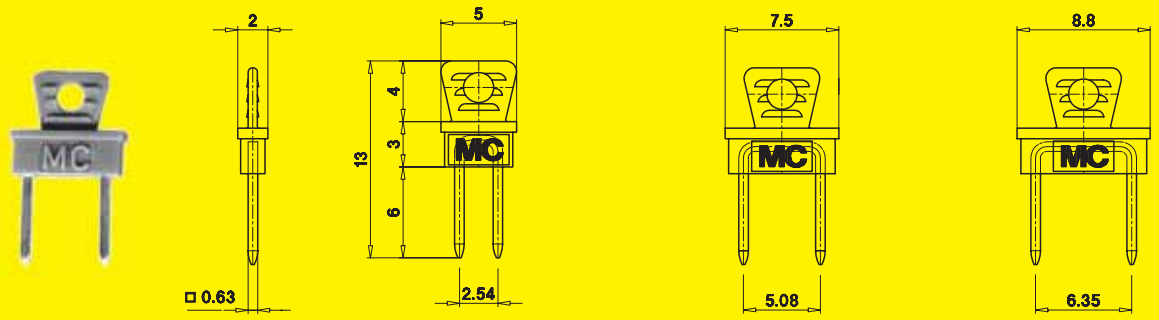

Type	KSI 0,63-2,54	KSI 0,63-5,08	KSI 0,63-6,35
Rated current	10 A	10 A	10 A
Insulation handle	PA	PA	PA
Operating temperature	-40°C ... +80°C	-40°C ... +80°C	-40°C ... +80°C
Metal part, plating	brass, gold-plated	brass, gold-plated	brass, gold-plated
Plug spacing	2.54 mm	5.08 mm	6.35 mm
	-Ⓐ-	-Ⓐ-	-Ⓐ-
Standard colours*	22 - 24, 28	22 - 24, 28	22 - 24, 28
Order No.	**24.0060-***	**24.0061-***	**24.0062-***

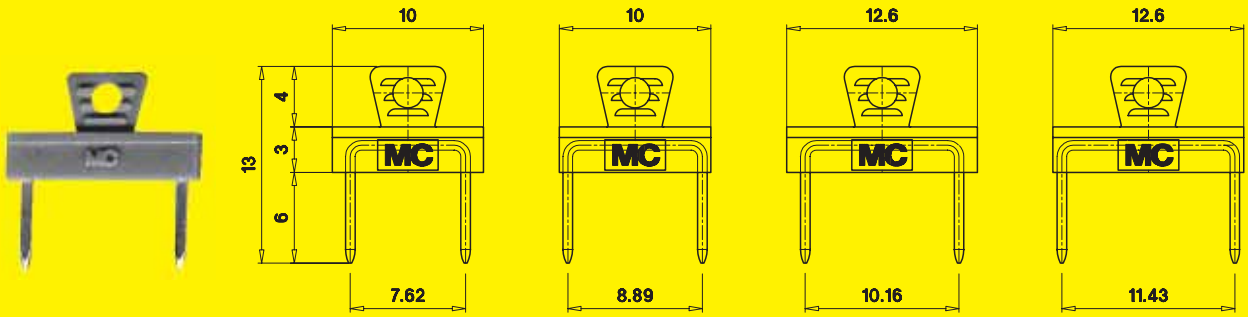

Type	KSI 0,63-7,62	KSI 0,63-8,89	KSI 0,63-10,16	KSI 0,63-11,43
Rated current	10 A	10 A	10 A	10 A
Insulation handle	PA	PA	PA	PA
Operating temperature	-40°C ... +80°C	-40°C ... +80°C	-40°C ... +80°C	-40°C ... +80°C
Metal part, plating	brass, gold-plated	brass, gold-plated	brass, gold-plated	brass, gold-plated
Plug spacing	7.62 mm	8.89 mm	10.16 mm	11.43 mm
	-Ⓐ-	-Ⓐ-	-Ⓐ-	-Ⓐ-
Standard colours*	22 - 24, 28	22 - 24, 28	22 - 24, 28	22 - 24, 28
Order No.	**24.0075-***	**24.0076-***	**24.0077-***	**24.0078-***

*Colour code	**20**	**21**	**22**	**23**	**24**	**25**	**26**	**27**	**28**	**29**	**30**	**33**
	green-yellow	black	red	blue	yellow	green	violet	brown	grey	white	orange	transparent

KS 0,63-...
0.63 mm connecting plugs are made of brass, formed, 0.8 µm gold-plated, uninsulated. Different plug spacings available.

KB 0,63-0,8-5,08
Component holder, with rear connector for connecting components respectively connecting plugs from ø 0.6 mm to ø 0.8 mm.

KB 0,63-2,54/1
Insulated connecting bridges. Suitable for connecting 0.63 mm x 0.63 mm wire-wrap-posts. Made of a band of hard-drawn copper alloy, gold-plated.

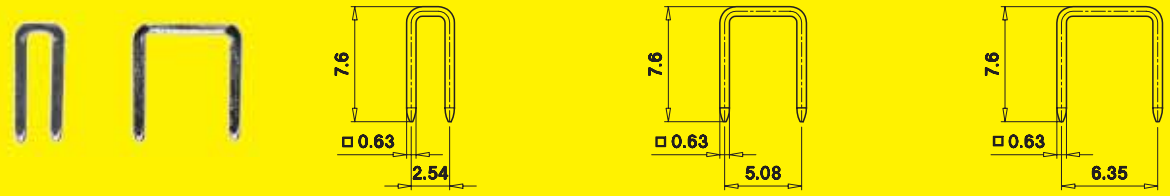

Type	KS 0,63-2,54	KS 0,63-5,08	KS 0,63-6,35
Rated current	10 A	10 A	10 A
Metal part, plating	brass, gold-plated	brass, gold-plated	brass, gold-plated
Plug spacing	2.54 mm	5.08 mm	6.35 mm
	Ⓐ	Ⓐ	Ⓐ
Order No.	**24.0065**	**24.0066**	**24.0067**

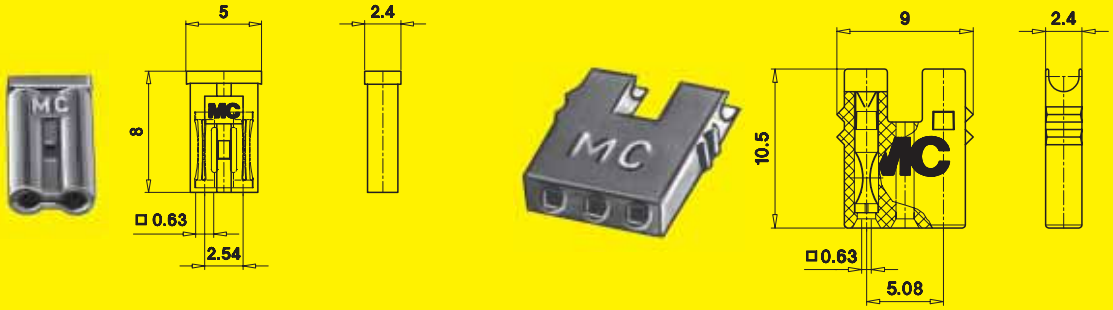

Type	KB 0,63-2,54/1	KB 0,63-0,8-5,08
Rated current	8 A	–
Insulation	PA	PA
Operating temperature	-40°C ... +80°C	-40°C ... +80°C
Metal part, plating	hard-drawn copper alloy, gold-plated	hard-drawn copper alloy, gold-plated
Plug spacing	2.54 mm	5.08 mm
	Ⓐ	
Standard colours*	22 - 24, 28	22 - 24, 28
Order No.	**24.0058-***	**24.0055-***

*Colour code	**20** green-yellow	**21** black	**22** red	**23** blue	**24** yellow	**25** green	**26** violet	**27** brown	**28** grey	**29** white	**30** orange	**33** transparent

ø 1 mm connecting plugs with insulated handle are made of brass, formed, gold-plated. Suitable for ø 1 mm spring-loaded sockets. Different plug spacings available.

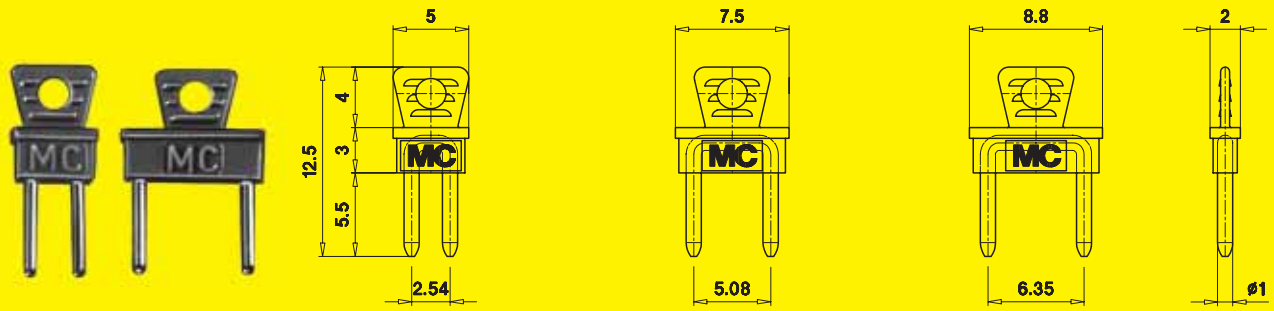

Type	KSI 1-2,54	KSI 1-5,08	KSI 1-6,35
Rated current	20 A	20 A	20 A
Insulation handle	PA	PA	PA
Operating temperature	-40°C ... +80°C	-40°C ... +80°C	-40°C ... +80°C
Metal part, plating	brass, gold-plated	brass, gold-plated	brass, gold-plated
Plug spacing	2.54 mm	5.08 mm	6.35 mm
	Ⓐ	Ⓐ	Ⓐ
Standard colours*	22 - 24, 28	22 - 24, 28	22 - 24, 28
Order No.	**24.0036-***	**24.0037-***	**24.0038-***

All that glitters is not gold ...

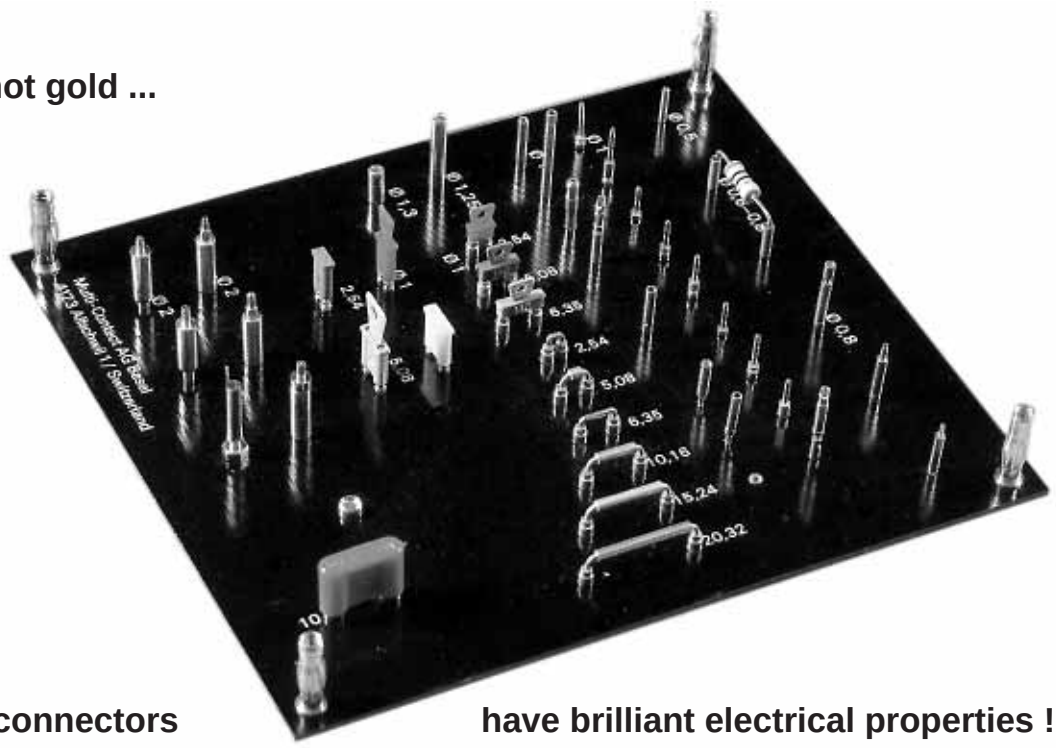

... but gold-plated connectors have brilliant electrical properties !

*Colour code	20	21	22	23	24	25	26	27	28	29	30	33
	green-yellow	black	red	blue	yellow	green	violet	brown	grey	white	orange	transparent

ø 1 mm connecting plugs are made of brass, formed, gold-plated, uninsulated. Different plug spacings available.



KS1-2,54

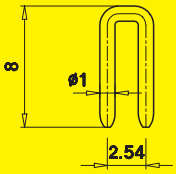

KS1-5,08

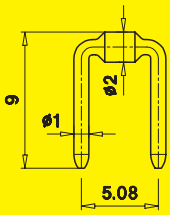

KS1-6,35

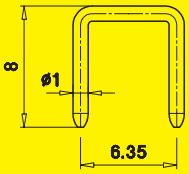

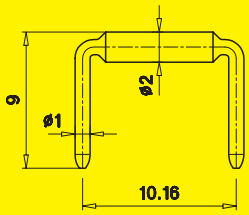

Type	KS 1-2,54	KS 1-5,08	KS 1-6,35	KS 1-10,16
Rated current	20 A	20 A	20 A	20 A
Metal part, plating	brass, gold-plated	brass, gold-plated	brass, gold-plated	brass, gold-plated
Plug spacing	2.54 mm	5.08 mm	6.35 mm	10.16 mm
	Ⓐ	Ⓐ	Ⓐ	Ⓐ
Order No.	**24.0030**	**24.0031**	**24.0035**	**24.0032**



KS1-11,43

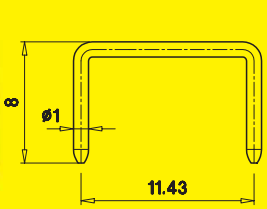

KS1-15,24

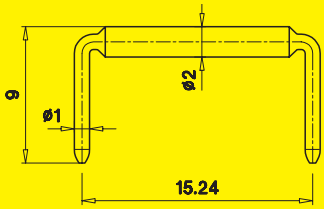

KS1-20,32

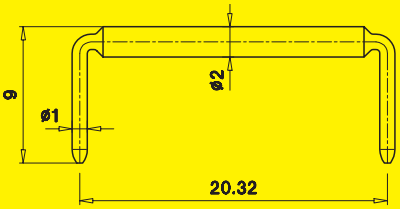

Type	KS 1-11,43	KS 1-15,24	KS 1-20,32
Rated current	20 A	20 A	20 A
Metal part, plating	brass, gold-plated	brass, gold-plated	brass, gold-plated
Plug spacing	11.43 mm	15.24 mm	20.32 mm
	Ⓐ	Ⓐ	Ⓐ
Order No.	**24.0071**	**24.0033**	**24.0034**

*Colour code	**20** green-yellow	**21** black	**22** red	**23** blue	**24** yellow	**25** green	**26** violet	**27** brown	**28** grey	**29** white	**30** orange	**33** transparent

Insulated ø 1 mm connecting bridges with spring-loaded sockets. Suitable for connecting ø 1 mm plugs. Types KB 1-2,54 and KB 1-5,08 with an additional grip.

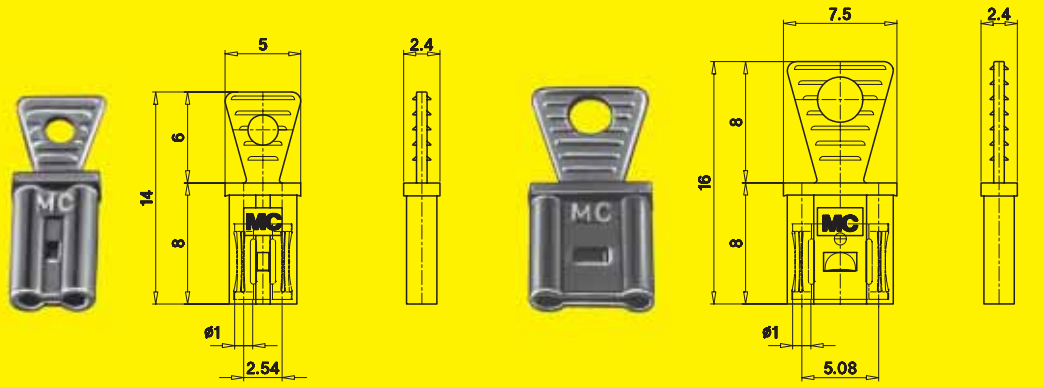

Type	KB 1-2,54	KB 1-5,08
Rated current	10 A	10 A
Insulation grip	PA	PA
Operating temperature	-40°C ... +80°C	-40°C ... +80°C
Metal part, plating	hard-drawn copper alloy, gold-plated	hard-drawn copper alloy, gold-plated
Plug spacing	2.54 mm	5.08 mm
	-Ⓐ-	-Ⓐ-
Standard colours*	22 - 24, 28	22 - 24, 28
Order No.	**24.0052-***	**24.0050-***

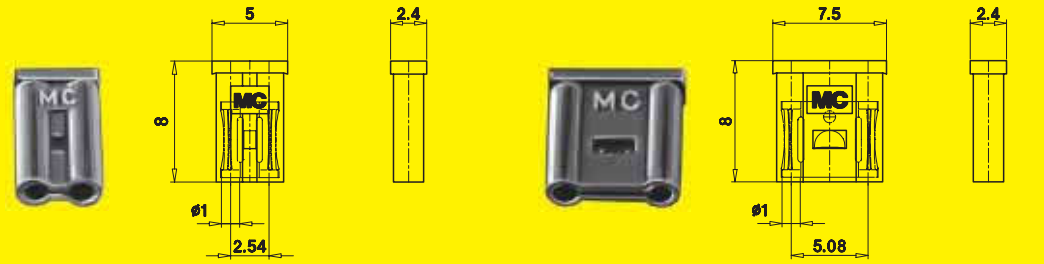

Type	KB 1-2,54/1	KB 1-5,08/1
Rated current	10 A	10 A
Insulation	PA	PA
Operating temperature	-40°C ... +80°C	-40°C ... +80°C
Metal part, plating	hard-drawn copper alloy, gold-plated	hard-drawn copper alloy, gold-plated
Plug spacing	2.54 mm	5.08 mm
	-Ⓐ-	-Ⓐ-
Standard colours*	22 - 24, 28	22 - 24, 28
Order No.	**24.0053-***	**24.0054-***

*Colour code	**20** green-yellow	**21** black	**22** red	**23** blue	**24** yellow	**25** green	**26** violet	**27** brown	**28** grey	**29** white	**30** orange	**33** transparent

Insulated press-in sockets, spring-loaded with Multilam, gold-plated.
Solder connection. The sockets are supplied disassembled.

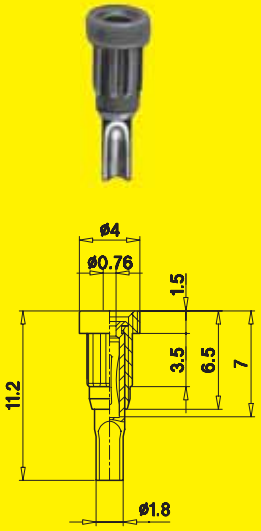

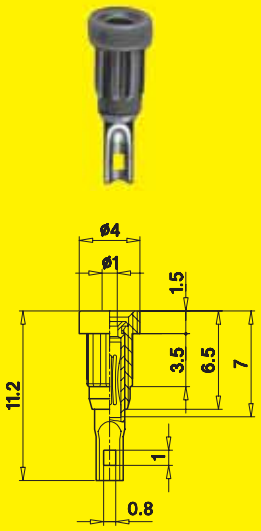

Type	EB0,76	EB1
Rated current	15 A	20 A
Contact resistance	1.2 mΩ	1 mΩ
Nominal diameter	ø 0.76 mm	ø 1 mm
Insulation	PA	PA
Operating temperature	-40°C ... +80°C	-40°C ... +80°C
Metal part, plating	brass, gold-plated	brass, gold-plated
Drill hole	ø 2.7 mm	ø 2.7 mm
Assembly	press-in	press-in
	Ⓐ	Ⓐ
Standard colours*	20 - 29	20 - 29
Order No.	**23.1009-***	**23.1010-***

Parts list

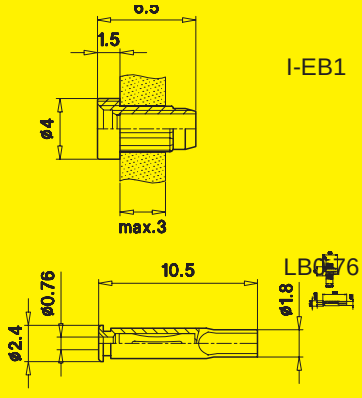

I-EB1

LB0,76

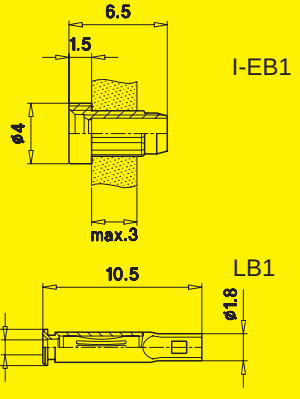

I-EB1

LB1

Insulation	**I-EB1, Order No. 23.5000-***	
Socket	**LB0,76, Order No. 41.0009**	**LB1, Order No. 41.0010**
Assembly tool	**MB0,76, Order No. 25.0029**	**MB1, Order No. 25.0030**
Drill	**HSS2,7, Order No. 25.0040**	
Assembly instructions on request	MA 102	

*Colour code	**20** green-yellow	**21** black	**22** red	**23** blue	**24** yellow	**25** green	**26** violet	**27** brown	**28** grey	**29** white	**30** orange	**33** transparent

ø 0.5 mm – ø 2 mm Sockets und Plugs

In this section you will find a wide range of non-insulated contact elements in socket and plug design. The sockets are equipped with MC® Multilams (spring-loaded) and are suited for the direct insertion of component wires, also in combination with the rigid pins, a good and reliable contact can be established. Many of the sockets and plugs are suited for printed-circuit technology. To protect from corrosion and ensure low contact resistances, all contact elements are tin- or gold-plated.

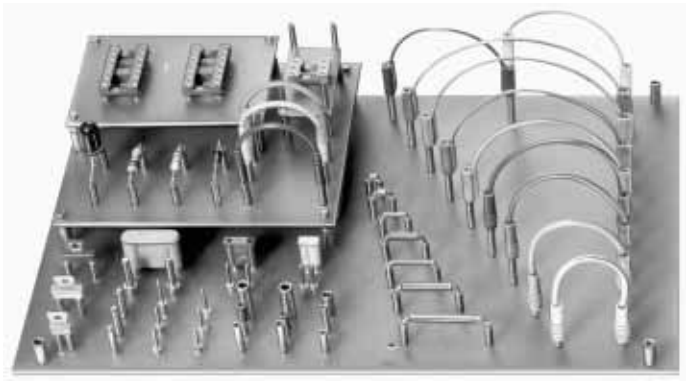

ø 0.8 mm
ø 1.0 mm
ø 1.3 mm
ø 2.0 mm

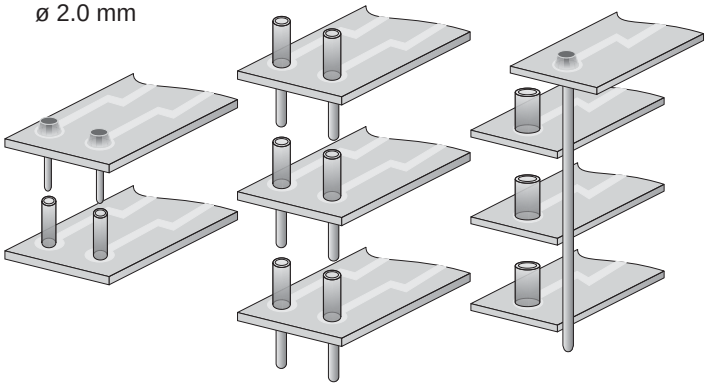

Sandwich Board Construction

Many of the contact elements are suitable for the assembly of circuits in multiple-layer sandwich construction. The overview shows all the board spacing distances and socket-plug combinations that can be realised with our contact elements.

Nominal diameter of plug connectors	Printboard spacing	Types	
		Socket	Plug
ø 0.8 mm	8 mm	B0,8-H	S0,8
ø 0.8 mm	9 mm	B0,8	S0,8
ø 0.8 mm	9.1 mm	B0,8-H	S0,8-H
ø 0.8 mm	10.1 mm	B0,8	S0,8-H
ø 1 mm	1.3 mm	LB1	S1-B
ø 1 mm	2.3 mm	LB1	S1-C
ø 1 mm	3.3 mm	LB1	S1-D
ø 1 mm	4.3 mm	B1-S	S1-B
ø 1 mm	5.3 mm	B1-S	S1-C
ø 1 mm	6.3 mm	B1-S	S1-D
ø 1 mm	8 mm	B1-A	S1-B
ø 1 mm	8 mm	BS1	S1-B
ø 1 mm	8 mm	B1-AI	S1-B
ø 1 mm	9 mm	B1-A	S1-C
ø 1 mm	9 mm	BS1	S1-C
ø 1 mm	9 mm	B1-AI	S1-C
ø 1 mm	10 mm	B1-A	S1-D
ø 1 mm	10 mm	BS1	S1-D
ø 1 mm	10 mm	B1-AI	S1-D

Nominal diameter of plug connectors	Printboard spacing	Types	
		Socket	Plug
ø 1 mm	10 mm	LS1	S1-B
ø 1 mm	11 mm	B1-B	S1-E
ø 1 mm	11 mm	LS1	S1-C
ø 1 mm	11 mm	B1-BI	S1-E
ø 1 mm	11.1 mm	B1	S1
ø 1 mm	12 mm	B1-B	S1-F
ø 1 mm	12 mm	LS1	S1-D
ø 1 mm	12 mm	B1-BI	S1-F
ø 1 mm	14.1 mm	B1	S1-A
ø 1 mm	20.6 mm	B1-T	S1
ø 1 mm	23.6 mm	B1-T	S1-A
ø 1.3 mm	9 mm	B1,3	S1,3-12
ø 2 mm	10 mm	B2-A	S2L
ø 2 mm	10 mm	B2-A	S2L-S
ø 2 mm	11 mm	B2	S2L
ø 2 mm	11 mm	B2	S2L-S
ø 2 mm	12 mm	B2-A	S2-D
ø 2 mm	13 mm	B2	S2-D

*Colour code	20	21	22	23	24	25	26	27	28	29	30	33
	green-yellow	black	red	blue	yellow	green	violet	brown	grey	white	orange	transparent

Spring-loaded sockets for connecting pins of different diameters. The sockets are made of brass, machined and gold-plated or tin-plated for best resistance against corrosion and small contact resistances.

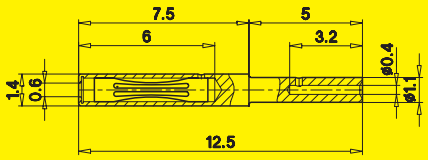

B0,5

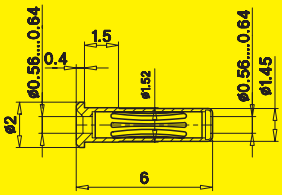

B0,56-0,64

Scale
3 : 1

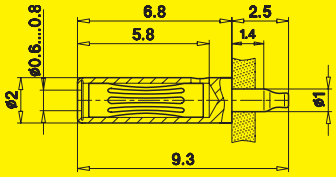

B0,6-0,8

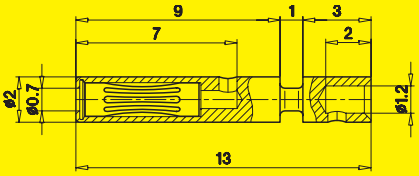

B0,7

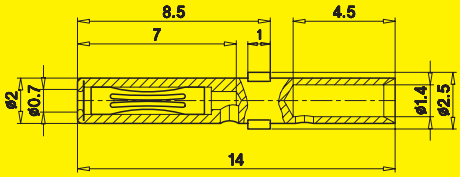

B0,7-B

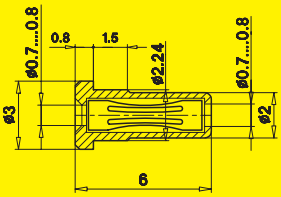

B0,7-0,8

Type	B0,5	B0,56-0,64	B0,6-0,8	B0,7	B0,7-B	B0,7-0,8
Rated current	7.5 A	8 A	10 A	15 A	15 A	15 A
Contact resistance	~ 3 mΩ	~ 3 mΩ	~ 2.5 mΩ	~ 1.5 mΩ	~ 3 mΩ	~ 3 mΩ
Nominal diameter	ø 0.5 mm	ø 0.56 ... ø 0.64 mm	ø 0.6 ... ø 0.8 mm	0.7 mm	0.7 mm	ø 0.7 ... ø 0.8 mm
Terminal	solder resp. crimp connection	circuit board installation	ø 1 mm soldering pin	solder connection	solder resp. crimp connection	circuit board installation
Sandwich board construction	no	yes	yes	no	no	yes
Withdrawal force	~ 1 N	~ 1.2 N	~ 1.8 N	~ 3.5 N	~ 3.5 N	~ 2 N
Special features	–	Technical data applies for ø 0.6 mm pin	Technical data applies for ø 0.6 mm pin	–	–	Technical data applies for ø 0.76 mm pin
Metal part, plating	brass, gold-plated	brass, tin-plated	brass, gold-plated	brass, gold-plated	brass, gold-plated	brass, tin-plated
	Ⓐ	Ⓐ	Ⓐ	Ⓐ	Ⓐ	Ⓐ
		Mounting instructions see below!				**Mounting instructions see below!**
Order No.	**41.0056**	**41.6020**	**41.6001**	**41.0054**	**41.6015**	**41.6021**

☞ Mounting instructions (sockets **B0,56-0,64** and **B0,7-0,8**)

- ❑ Gloves (cotton or latex operating gloves) should be worn when handling the sockets (especially when dip soldering).
- ❑ Avoid keeping the sockets longer than six months in stock.
- ❑ Store only in closed plastic bags and do not leave open to corrosive agents.

*Colour code	**20** green-yellow	**21** black	**22** red	**23** blue	**24** yellow	**25** green	**26** violet	**27** brown	**28** grey	**29** white	**30** orange	**33** transparent

Spring-loaded sockets for connecting pins of different diameters. The sockets are made of brass, machined and gold-plated or tin-plated for best resistance against corrosion and small contact resistances.

Scale 3 : 1

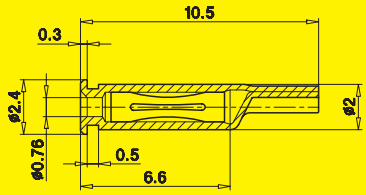

LB0,76

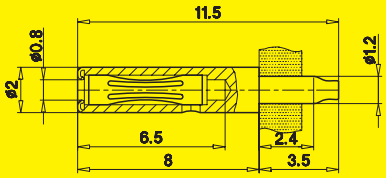

B0,8

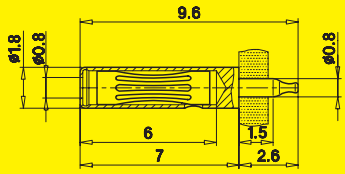

B08-H

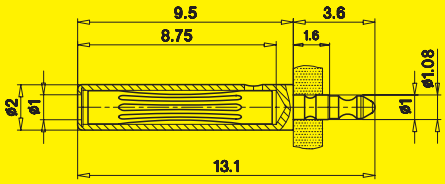

B1

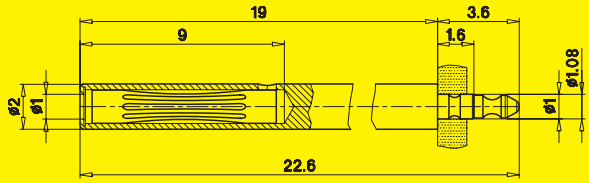

B1-T / (M 2,6:1)

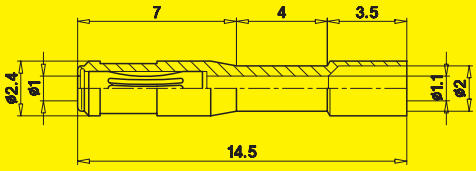

B1-TH

Type	LB0,76	B0,8	B0,8-H	B1	B1-T	B1-TH
Rated current	15 A	18 A	18 A	20 A	20 A	20 A
Contact resistance	~ 1.2 mΩ	~ 1.2 mΩ	~ 1.2 mΩ	~ 1 mΩ	~ 1.2 mΩ	~ 1 mΩ
Nominal diameter	ø 0.76 mm	ø 0.8 mm	ø 0.8 mm	ø 1 mm	ø 1 mm	ø 1 mm
Terminal	circuit board installation, dip soldering	ø 1.2 mm soldering pin	ø 0.8 mm soldering pin	ø 1.08 mm soldering pin, suitable for flow soldering	ø 1.08 mm soldering pin, suitable for flow soldering	0.25 mm² crimp connection
Sandwich board construction	no	yes	yes	yes	yes	no
Withdrawal force	~ 3 N	~ 2.5 N	~ 2.5 N	~ 1.5 N	~ 1.5 N	~ 3 N
Metal part, plating	brass, gold-plated	brass, gold-plated	brass, gold-plated	brass, gold-plated	brass, gold-plated	brass, gold-plated
	=Ⓐ=	=Ⓐ=	=Ⓐ=	=Ⓐ=	=Ⓐ=	=Ⓐ=
Order No.	**41.0009**	**41.0055**	**41.0057**	**41.0051**	**41.6002**	**41.6000**

Suitable insulation	**I-EB1** Standard colours*: 20 - 29 **Order No. 23.5000-***	–	–	–	–	**KT2-S** Standard colours*: 21 - 29 **Order No. 22.2010-***

*Colour code	**20** green-yellow	**21** black	**22** red	**23** blue	**24** yellow	**25** green	**26** violet	**27** brown	**28** grey	**29** white	**30** orange	**33** transparent

Spring-loaded sockets for connecting ø 1 mm pins.
The sockets are made of brass, machined and gold-plated for best resistance against corrosion and small contact resistances.

Scale 3 : 1

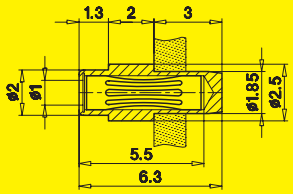

B1-S

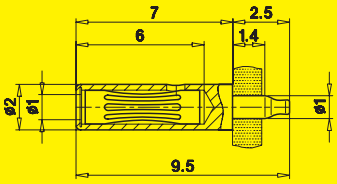

B1-A

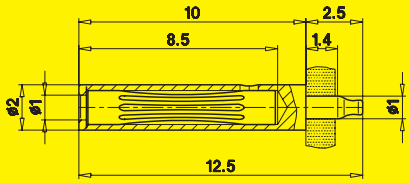

B1-B

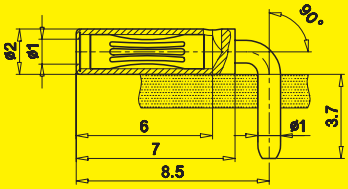

BS1/90

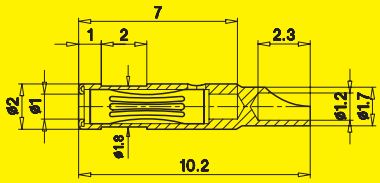

LS1-B

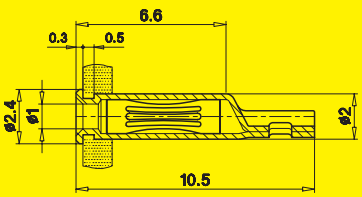

LB1

Type	B1-S	B1-A	B1-B	BS1/90	LS1-B	LB1
Rated current	20 A	20 A	20 A	20 A	20 A	20 A
Contact resistance	~ 1 mΩ	~ 1 mΩ	~ 1.2 mΩ	~ 1 mΩ	~ 1 mΩ	~ 1 mΩ
Nominal diameter	ø 1 mm	ø 1 mm	ø 1 mm	ø 1 mm	ø 1 mm	ø 1 mm
Terminal	circuit board installation, dip soldering	ø 1 mm soldering pin	ø 1 mm soldering pin	ø 1 mm solder pin	solder connection	circuit board installation, dip soldering
Sandwich board construction	yes	yes	yes	no	no	yes
Withdrawal force	~ 3 N	~ 3 N	~ 2 N	~ 3 N	~ 3 N	~ 3 N
Metal part, plating	brass, gold-plated	brass, gold-plated	brass, gold-plated	brass, gold-plated	brass, gold-plated	brass, gold-plated
	Ⓐ	Ⓐ	Ⓐ	Ⓐ	Ⓐ	Ⓐ
Order No.	**41.6019**	**41.0001**	**41.0002**	**41.6004**	**22.1008**	**41.0010**

Suitable insulation	–	–	–	–	**KT1-S** Standard colours*: 21 - 29 **Order No. 22.2070-***	**I-EB1** Standard colours*: 20 - 29 **Order No. 23.5000-***

*Colour code	**20** green-yellow	**21** black	**22** red	**23** blue	**24** yellow	**25** green	**26** violet	**27** brown	**28** grey	**29** white	**30** orange	**33** transparent

Spring-loaded sockets for connecting ø 1 mm pins and integrated sockets and plugs for printed circuit board assembly and lead assemblies.

The sockets are made of brass, machined and gold-plated for best resistance against corrosion and small contact resistances.

Scale 3 : 1

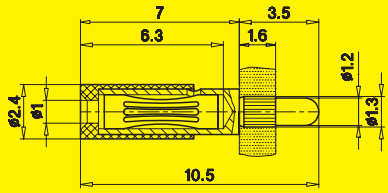

B1-AI

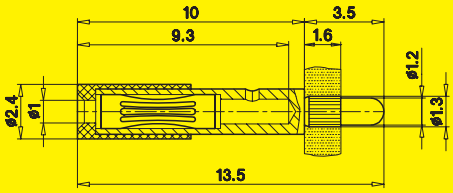

B1-BI

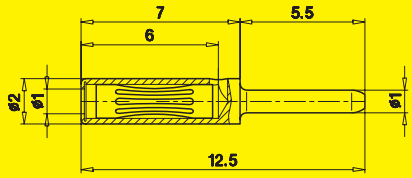

BS1

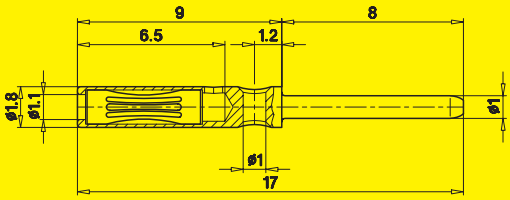

LS1

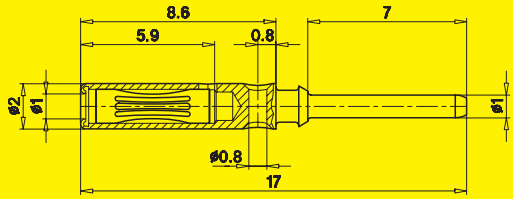

LS1-A

Type	B1-AI	B1-BI	BS1	LS1	LS1-A
Design	socket	socket	socket and plug	socket and plug	socket and plug
Rated current	20 A	20 A	20 A	20 A	20 A
Contact resistance	~ 1 mΩ	~ 1 mΩ	~ 1 mΩ	~ 1 mΩ	~ 1 mΩ
Nominal diameter	ø 1 mm	ø 1 mm	ø 1 mm	ø 1 mm	ø 1 mm
Terminal	press-in or soldering pin	press-in or soldering pin	ø 1 mm pin	solder connection or ø 1 mm pin	solder connection or ø 1 mm pin
Sandwich board construction	yes	yes	yes	yes	no
Withdrawal force	~ 3 N	~ 3 N	~ 3 N	~ 3 N	~ 1,4 N
Metal part, plating	brass, gold-plated	brass, gold-plated	brass, gold-plated	brass, gold-plated	brass, gold-plated
Special features	suitable for plugs with length ≤ 6 mm; coloured insulation sleeve for identification	suitable for plugs with length 7 mm; coloured insulation sleeve for identification	–	suitable for lead assemblies	suitable for lead assemblies; insulation available
	=Ⓐ=	=Ⓐ=	=Ⓐ=	=Ⓐ=	=Ⓐ=
Standard colours*	22 - 25	22 - 25	–	–	–
Order No.	**41.0003-***	**41.0004-***	**41.0053**	**22.1001**	**22.1019**

Suitable insulation	–	–	–	–	**KT1-A** Standard colours*: 21 - 29 **Order No.** **22.2040-***

*Colour code	**20** green-yellow	**21** black	**22** red	**23** blue	**24** yellow	**25** green	**26** violet	**27** brown	**28** grey	**29** white	**30** orange	**33** transparent

Spring-loaded sockets for connecting pins of different diameters. The sockets are made of brass, machined and gold-plated or tin-plated for best resistance against corrosion and small contact resistances.

Scale 3 : 1

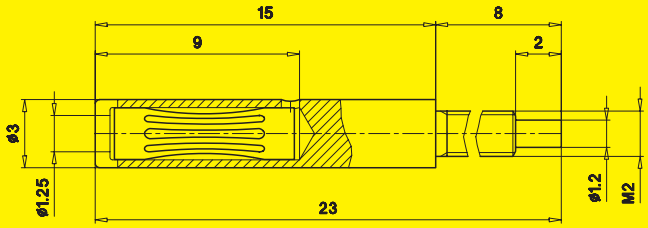

B1,25

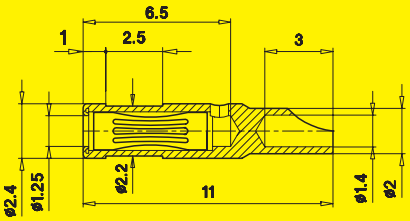

LS1,25-B

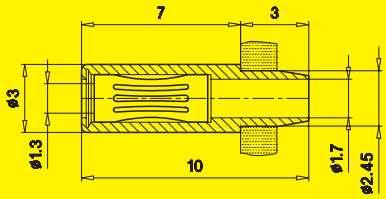

B1,3

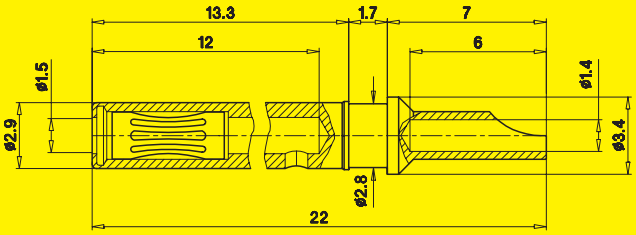

B1,5

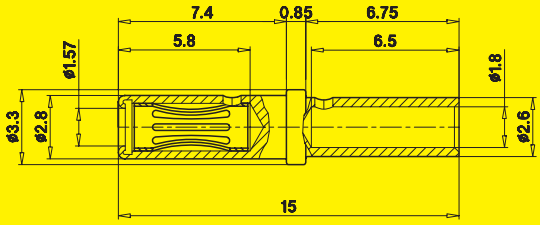

B1,57-16

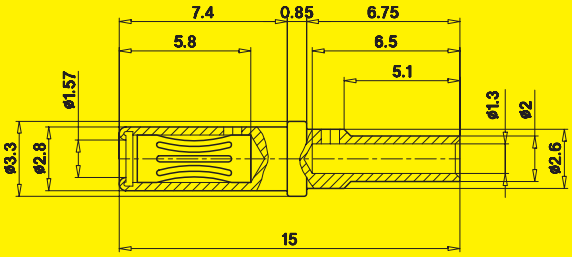

B1,57-20R

Type	B1,25	LS1,25-B	B1,3	B1,5	B1,57-16	B1,57-20R
Rated current	20 A	20 A	20 A	25 A	25 A	10 A
Contact resistance	~ 1 mΩ	~ 1 mΩ	~ 1 mΩ	~ 0.9 mΩ	~ 0.5 mΩ	~ 0.5 mΩ
Nominal diameter	ø 1.25 mm	ø 1.25 mm	ø 1.3 mm	ø 1.5 mm	ø 1.57 mm	ø 1.57 mm
Terminal	Gewindebolzen M2	solder connection	circuit board solder connection	solder connection	crimp connection for AWG 16	crimp connection for AWG 20
Sandwich board construction	yes	no	yes	no	no	no
Withdrawal force	~ 1 N	~ 2 N	~ 1 N	~ 1 N	~ 3 N	~ 3 N
Metal part, plating	brass, gold-plated	brass, gold-plated	brass, gold-plated	brass, gold-plated (0.5 µm Au)	brass, gold-plated (1.2 µm Au)	Multilam, hard-drawn copper alloy, gold-plated (1.2 µm Au); contact body: brass, gold-plated (0.5 µm Au)
	Ⓐ	Ⓐ	Ⓐ	Ⓐ	Ⓐ	Ⓐ
Order No.	**41.6007**	**22.1044**	**41.0071**	**41.6011**	**41.6016**	**41.6058**

Suitable insulation	–	**KT2-S**, Standard colours*: 21 - 29, **Order No. 22.2010-***	–	–	–	–
Recommended mounting tool	–	–	–	–	crimping pliers M-CZ, Order No. 18.3800	

*Colour code	**20** green-yellow	**21** black	**22** red	**23** blue	**24** yellow	**25** green	**26** violet	**27** brown	**28** grey	**29** white	**30** orange	**33** transparent

Spring-loaded sockets for connecting ø 2 mm pins.
The sockets are made of brass, machined and gold-plated for best resistance against corrosion and small contact resistances.

Scale 2 : 1

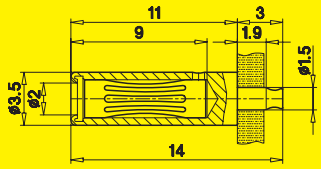

B2

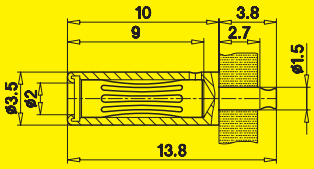

B2-A

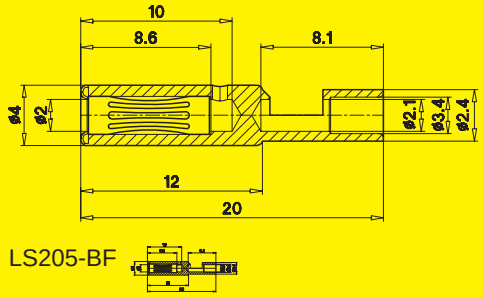

LS205-BF

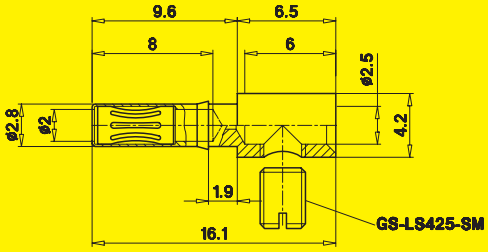

LBH225-M3

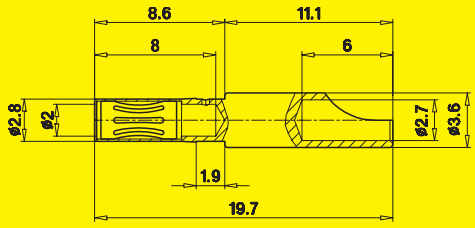

LS225-BF

Type	B2	B2-A	LS205-BF	LBH225-M3	LS225-BF
Rated current	25 A	25 A	25 A	25 A	25 A
Contact resistance	~ 0.5 mΩ	~ 0.5 mΩ	~ 0.5 mΩ	~ 0.5 mΩ	~ 0.5 mΩ
Nominal diameter	ø 2 mm	ø 2 mm	ø 2 mm	ø 2 mm	ø 2 mm
Terminal	ø 1.5 mm soldering pin	ø 1.5 mm soldering pin	solder connection	screw clamping for leads up to 1.5 mm^2 (screw is not supplied !)	solder connection
Sandwich board construction	yes	yes	no	no	no
Withdrawal force	~ 4 N	~ 4.0 N	~ 4 N	~ 5 N	~ 5 N
Metal part, plating	brass, gold-plated	brass, gold-plated	brass, gold-plated	brass, gold-plated	brass, gold-plated
	EA	EA	EA	EA	EA
Order No.	**41.0061**	**41.6018**	**22.1039**	**49.7507**	**22.1031**

Suitable insulation	–	–	**KT205-S** Standard colours*: 21 - 22 **Order No. 22.2360-***	**I-CH225** Standard colour*: black **Order No. 50.1115-21**	**I-CH225** Standard colour*: black **Order No. 50.1115-21**
Screw	–	–	–	**GS-LS425-SM Order No. 22.6122**	–

*Colour code	**20** green-yellow	**21** black	**22** red	**23** blue	**24** yellow	**25** green	**26** violet	**27** brown	**28** grey	**29** white	**30** orange	**33** transparent

Rigid plugs of different diameters. All plugs are gold-plated for best resistance against corrosion and small contact resistances.

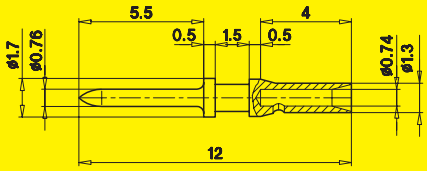

LS0,76-S

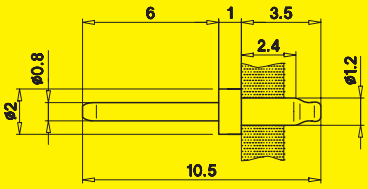

S0,8

Scale 3 : 1

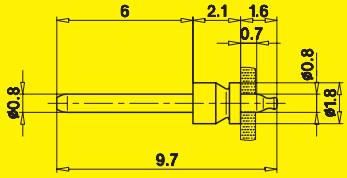

S0,8-H

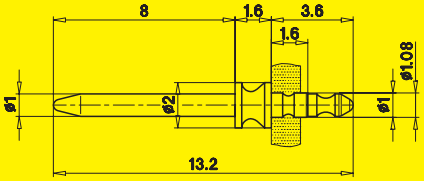

S1

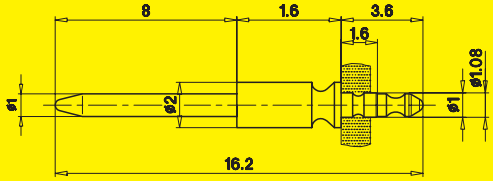

S1-A

Type	LS0,76-S	S0,8	S0,8-H	S1	S1-A
Nominal diameter	ø 0.76 mm	ø 0.8 mm	ø 0.8 mm	ø 1 mm	ø 1 mm
Terminal	0.17 mm^2 crimp connection	ø 1.2 mm soldering pin	ø 0.8 mm soldering pin	ø 1.08 mm soldering pin for wave soldering	ø 1.08 mm soldering pin for wave soldering
Sandwich board construction	no	yes	yes	yes	yes
Metal part, plating	hard-drawn copper alloy, gold-plated	brass, gold-plated	brass, gold-plated	brass, gold-plated	brass, gold-plated
Order No.	**22.1017**	**42.0055**	**42.0054**	**42.0051**	**42.0052**

Suitable insulation	**KT0,76-S** Standard colours*: 21 - 25, 29, **Order No. 22.2210-***	–	–	–	–
Recommended mounting tool	Crimping pliers **M-CZ** **Order No. 18.3800**	–	–	–	–

*Colour code	**20** green-yellow	**21** black	**22** red	**23** blue	**24** yellow	**25** green	**26** violet	**27** brown	**28** grey	**29** white	**30** orange	**33** transparent

ø 1mm rigid plugs. All plugs are gold-plated for best resistance against corrosion and small contact resistances.

Scale 3 : 1

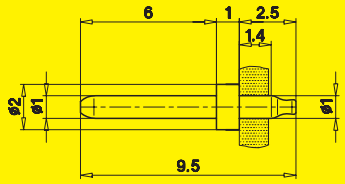

S1-B

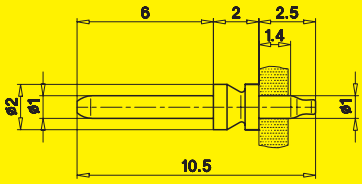

S1-C

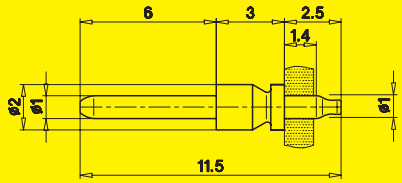

S1-D

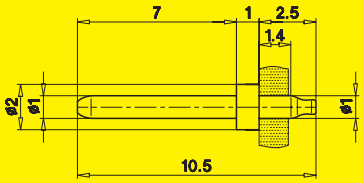

S1-E

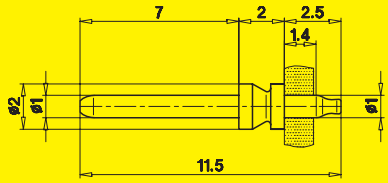

S1-F

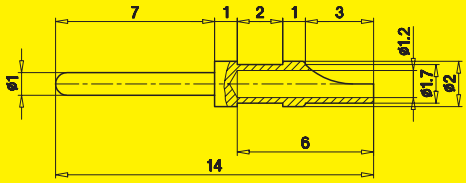

LS1-S

Type	S1-B	S1-C	S1-D	S1-E	S1-F	LS1-S
Nominal diameter	ø 1 mm	ø 1 mm	ø 1 mm	ø 1 mm	ø 1 mm	ø 1 mm
Terminal	ø 1 mm soldering pin	ø 1 mm soldering pin	ø 1 mm soldering pin	ø 1 mm soldering pin	ø 1 mm soldering pin	solder connection
Sandwich board construction	yes	yes	yes	yes	yes	no
Metal part, plating	brass, gold-plated	brass, gold-plated	brass, gold-plated	brass, gold-plated	brass, gold-plated	brass, gold-plated
Order No.	**42.0001**	**42.0002**	**42.0003**	**42.0004**	**42.0005**	**22.1007**

Suitable insulation	–	–	–	–	–	**KT1-S** Standard colours*: 21 - 29 **Order No. 22.2070-***

*Colour code	**20** green-yellow	**21** black	**22** red	**23** blue	**24** yellow	**25** green	**26** violet	**27** brown	**28** grey	**29** white	**30** orange	**33** transparent

ø 1.3 mm rigid plugs, available with different pin lengths.
All plugs are gold-plated for best resistance against corrosion and small contact resistances.

Scale 3 : 1

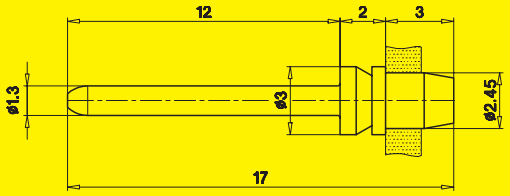

S1,3-12

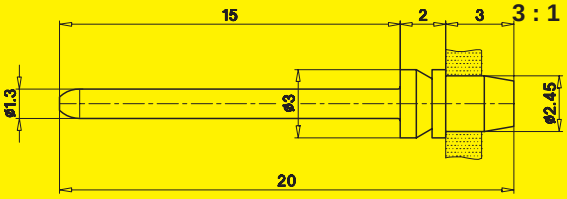

S1,3-15

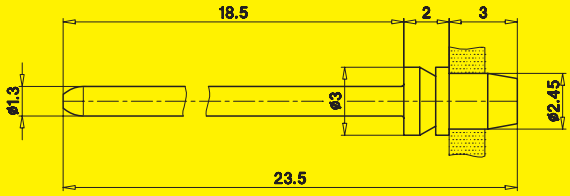

S1,3-18,5

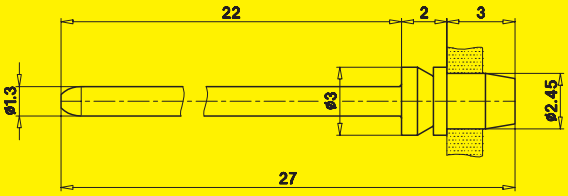

S1,3-22

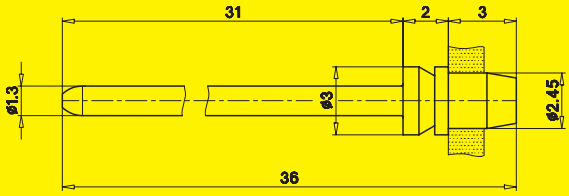

S1,3-31

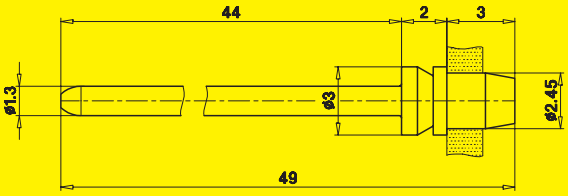

S1,3-44

Type	S1,3-12	S1,3-15	S1,3-18,5	S1,3-22	S1,3-31	S1,3-44
Nominal diameter	ø 1.3 mm	ø 1.3 mm	ø 1.3 mm	ø 1.3 mm	ø 1.3 mm	ø 1.3 mm
Pin length	12 mm	15 mm	18.5 mm	22 mm	31 mm	44 mm
Terminal	ø 2.45 mm soldering pin	ø 2.45 mm soldering pin	ø 2.45 mm soldering pin	ø 2.45 mm soldering pin	ø 2.45 mm soldering pin	ø 2.45 mm soldering pin
Sandwich board construction	yes	no	no	no	no	no
Metal part, plating	brass, gold-plated	hard-drawn copper alloy, gold-plated	hard-drawn copper alloy, gold-plated	hard-drawn copper alloy, gold-plated	hard-drawn copper alloy, gold-plated	hard-drawn copper alloy, gold-plated
Order No.	**42.0070**	**42.0071**	**42.0072**	**42.0073**	**42.0074**	**42.0075**

*Colour code	**20** green-yellow	**21** black	**22** red	**23** blue	**24** yellow	**25** green	**26** violet	**27** brown	**28** grey	**29** white	**30** orange	**33** transparent

Rigid plugs of different diameters. All plugs are gold-plated for best resistance against corrosion and small contact resistances.

Scale 3 : 1

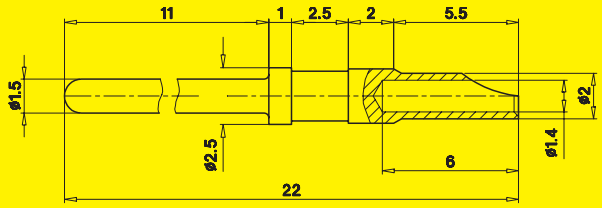

LS1,5-S

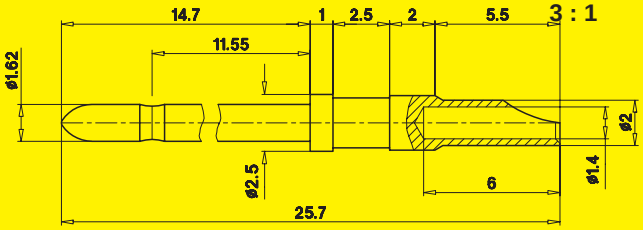

LS1,62-S

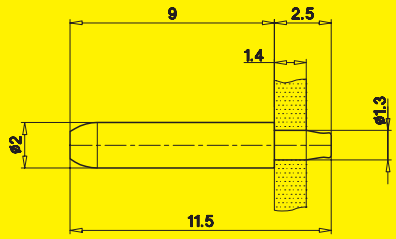

S2L

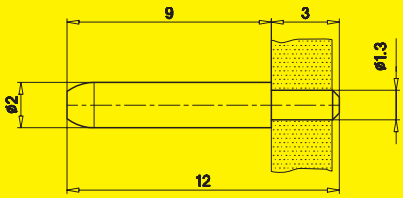

S2L-S

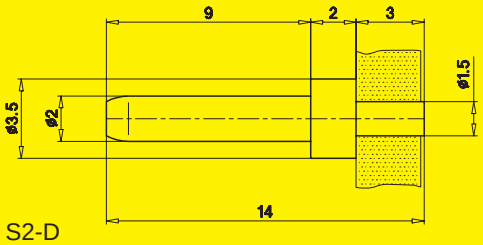

S2-D

Type	LS1,5-S	LS1,62-S	S2L	S2L-S	S2-D
Nominal diameter	ø 1.5 mm	ø 1.62 mm	ø 2 mm	ø 2 mm	ø 2 mm
Terminal	solder connection	solder connection	ø 1.3 mm soldering pin	ø 1.3 mm soldering pin	ø 1.5 mm soldering pin
Sandwich board construction	no	no	yes	yes	yes
Metal part, plating	brass, gold-plated	brass, gold-plated	brass, gold-plated	brass, gold-plated	brass, gold-plated
Order No.	**22.5101**	**22.5102**	**42.0061**	**42.0060**	**42.0062**

Suitable insulation	**KT2-S** Standard colours*: 21 - 29 **Order No. 22.2010-***	**KT2-S** Standard colours*: 21 - 29 **Order No. 22.2010-***	–	–	–

*Colour code	**20** green-yellow	**21** black	**22** red	**23** blue	**24** yellow	**25** green	**26** violet	**27** brown	**28** grey	**29** white	**30** orange	**33** transparent

ø 2 mm rigid plugs. All plugs are gold-plated for best resistance against corrosion and small contact resistances.

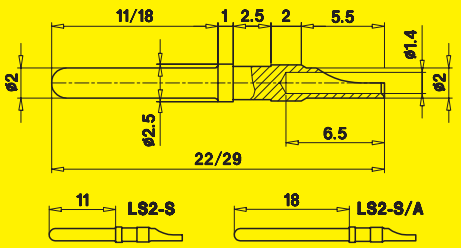

LS2-S LS2-S/A

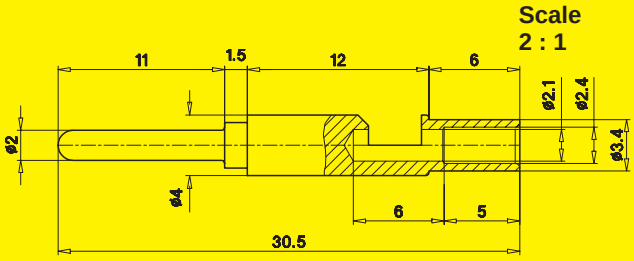

LS205-U

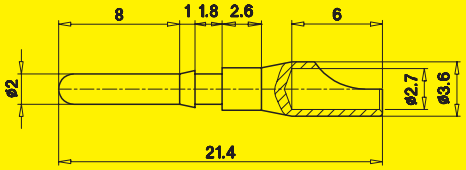

LS225

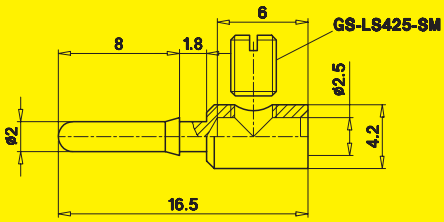

LSH225-M3

Type	LS2-S	LS2-S/A	LS205-U	LS225	LSH225-M3
Nominal diameter	ø 2 mm	ø 2 mm	ø 2 mm	ø 2 mm	ø 2 mm
Terminal	solder connection	solder connection	solder connection	solder connection for leads up to 2.5 mm^2	screw connection for leads up to 1.5 mm^2 (screw is not supplied !)
Sandwich board construction	no	no	no	no	no
Metal part, plating	brass, gold-plated	brass, gold-plated	brass, gold-plated	brass, gold-plated	brass, gold-plated
Order No.	**22.1002**	**22.5103**	**22.1041**	**22.1023**	**49.2028**

Suitable insulation	**KT2-S** Standard colours*: 21 - 29 **Order No. 22.2010-***	**KT2-S** Standard colours*: 21 - 29 **Order No. 22.2010-***	**KT205-S** Standard colours*: 21 - 22 **Order No. 22.2360-***	**I-CH225** Standard colour*: black **Order No. 50.1115-21**	**I-CH225** Standard colour*: black **Order No. 50.1115-21**
Screw	–	–	–	–	**GS-LS425-SM Order No. 22.6122**

*Colour code	**20** green-yellow	**21** black	**22** red	**23** blue	**24** yellow	**25** green	**26** violet	**27** brown	**28** grey	**29** white	**30** orange	**33** transparent

This miniature test clip can grasp the finest wires or pins of electronic components. The hard gold-plating of the tiny wire clips ensures a very low contact resistance. A slight twist of the knurled wheel pushes the clip out of the guide tube and opens it.

On releasing the knurled wheel, the built-in spring pulls back the wire clip so that it firmly grasps the test object.
For greater convenience and for storage, up to 10 miniature test clips can be arranged in a row on a holder bar (type SMC-10).

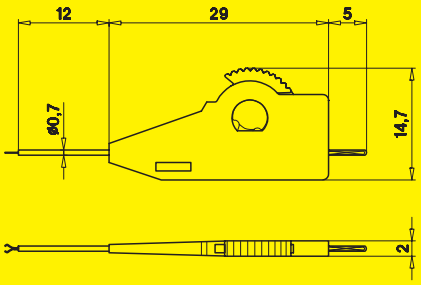





MCL-1: For the finest test connections

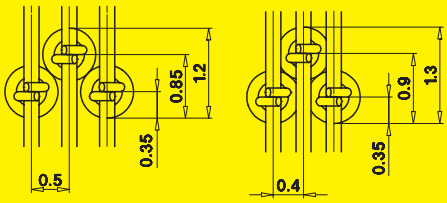

Grid: min. 0.4 mm



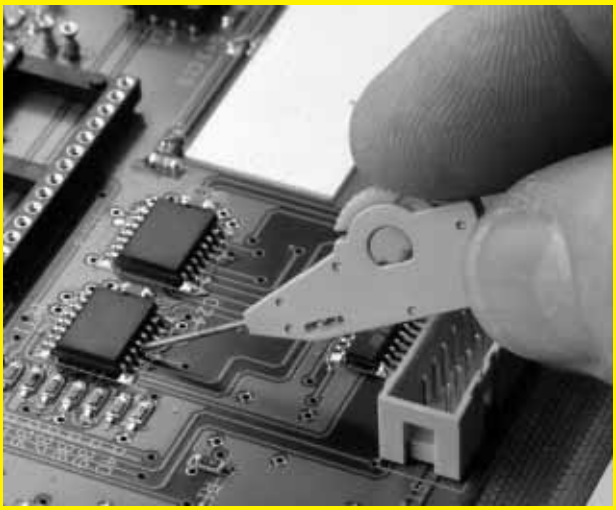

Type	MCL-1
Rated voltage	15 V
Rated current	100 mA
Transition resistance	17 mΩ (typical)
Insulation	PA
Operating temperature	-55°C ... +125°C
Probe	test clip in fine stainless steel wire, hard gold-plated
Length of probe	13 mm
Terminal	0.63 mm pin
Standard colours*	24, 30
Order No.	**69.3401-***



Adapter lead AK0,63-B/405-BK

Holder bar	**SMC-10, Order No. 69.3402** (for up to 10 miniature clips, type MCL-1)
Adapter lead	**AK0,63-B/405-BK, Order No. 28.0005-01521** (one end with 0.63 mm spring-loaded socket, the other end with ø 4 mm rigid safety socket), see page 113.

*Colour code	**20**	**21**	**22**	**23**	**24**	**25**	**26**	**27**	**28**	**29**	**30**	**33**
	green-yellow	black	red	blue	yellow	green	violet	brown	grey	white	orange	transparent

KPS4/1:
Miniature test clip with revolving grabber and spring-loaded ø 1 mm socket for accepting ø 1 mm rigid plugs.

MICROGRIP-A:
Hook clip with fine wire hook for grasping IC legs, plug pins and bare wire connections. Rigid 0.63 mm pin to mate with spring-loaded 0.63 mm sockets.

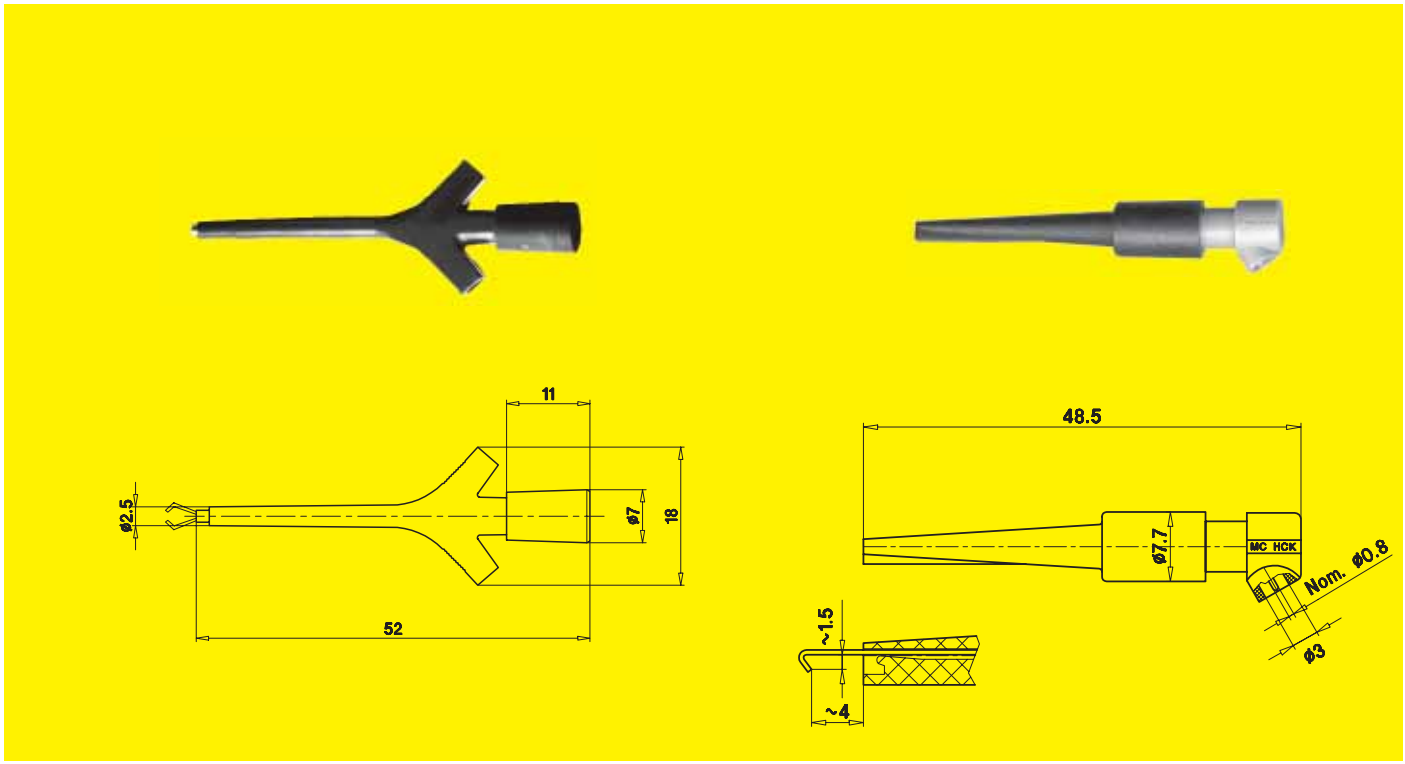

Type	KPS4/1	MICROGRIP-A
Insulation	PA-GV	PA
Operating temperature	-25°C ... +100°C	-40°C ... +80°C
Clip	wire grabber, nickel-plated	hook clip, hard-drawn copper alloy, gold-plated
Terminal	ø 1 mm spring-loaded socket	0.63 mm rigid pin
		
Standard colours*	21 - 22	21 - 25, 29
Order No.	**24.0210-***	**63.9090-***

Suitable connection lead	Adapter lead **AK1-A/4012-BK, Order No. 28.0007-015*** (one end with stackable, ø 1 mm rigid plug, the other end with ø 4 mm rigid safety socket), see page 114.	Adapter lead **AK0,63-B/405-BK, Order No. 28.0005-01521** (one end with 0.63 mm spring-loaded socket, the other end with ø 4 mm rigid safety socket), see page 113.

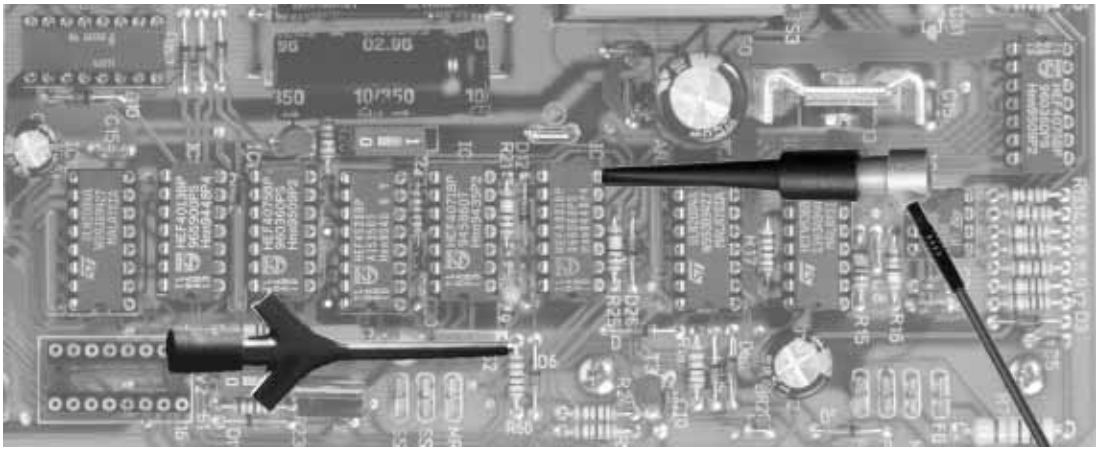

*Colour code	**20**	**21**	**22**	**23**	**24**	**25**	**26**	**27**	**28**	**29**	**30**	**33**
	green-yellow	black	red	blue	yellow	green	violet	brown	grey	white	orange	transparent

Hook clips with soldering connection for wires of various cross-sections. The fine wire connecting hooks grasp IC legs, plug pins and bare wire connections, and press them against the insulated head under spring pressure. The low weight of the clips imposes hardly any load even on critical contacts.

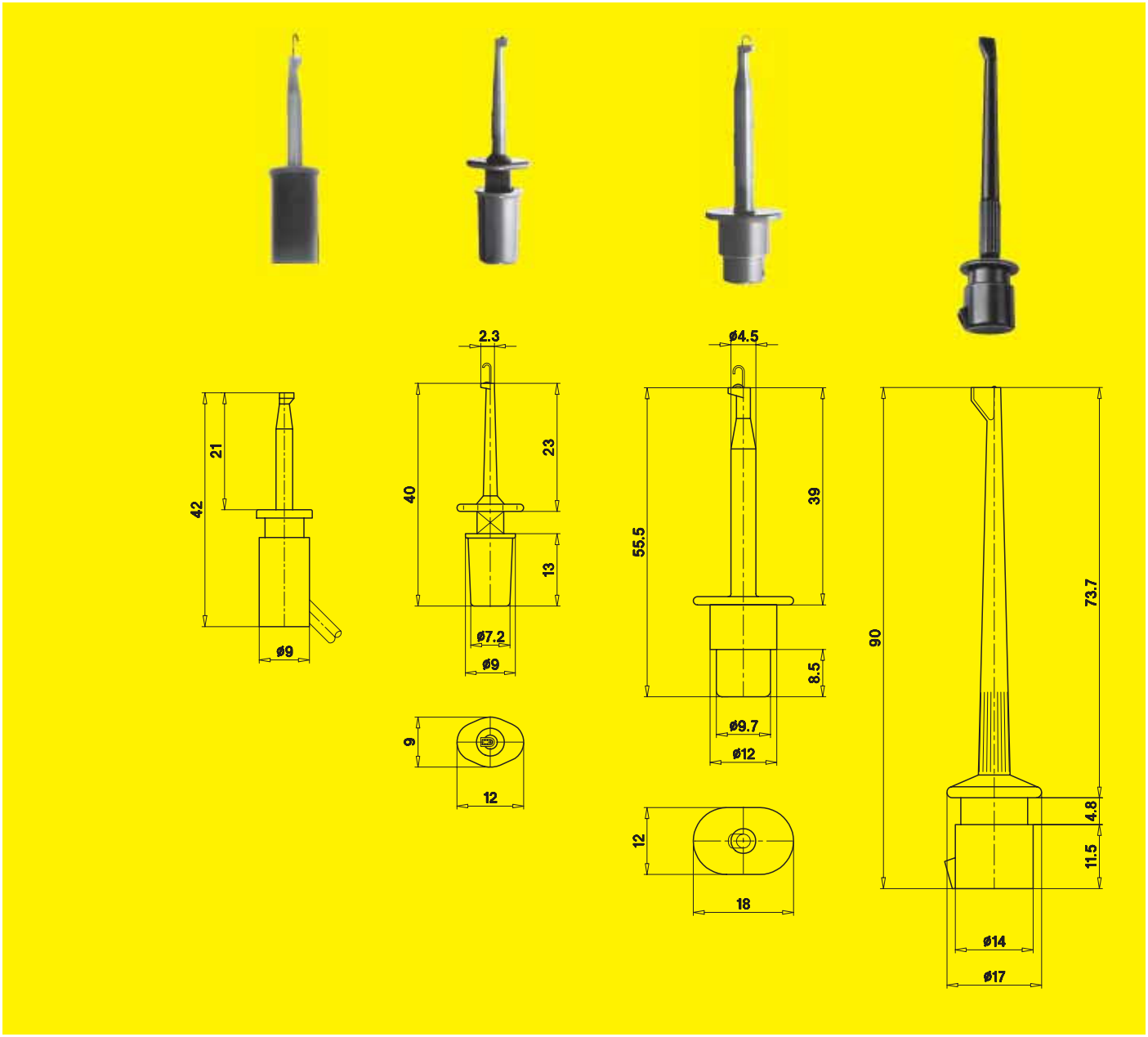

Type	HK-42	KPSO	KPS1	KPS2
Insulation	PA	PA	PA	PA
Operating temperature	-25°C ... +70°C	-25°C ... +70°C	-25°C ... +70°C	-25°C ... +70°C
Clip	hook clip, hard-drawn copper alloy, gold-plated	hook clip, hard-drawn copper alloy	hook clip, hard-drawn copper alloy	hook clip, hard-drawn copper alloy
Cross section connected wire	max. 0.5 mm^2	max. 0.5 mm^2	max. 1.5 mm^2	max. 1.5 mm^2
Outer diameter connected wire	max. ø 2 mm	max. ø 1.3 mm	max. ø 2.3 mm	max. ø 3.4 mm
Standard colours*	21 - 25, 29	21 - 25, 29	21 - 25, 29	21 - 22
Order No.	**69.9223-***	**24.0134-***	**24.0135-***	**24.0136***

*Colour code	**20** green-yellow	**21** black	**22** red	**23** blue	**24** yellow	**25** green	**26** violet	**27** brown	**28** grey	**29** white	**30** orange	**33** transparent

Highly Flexible Connection Leads
One end with ø 1.5 mm safety plug with reliable Multilam contacts, open-ended lead at the other. The lead's Silicone insulation and the plug's TPE insulation can be sterilised in steam.

Fully Insulated Panel Sockets
Fully insulated ø 1.5 mm safety sockets. Gold-plated round pin for rear connection. The sockets can be assembled in various ways in predrilled panels of plastic, metal, etc. (see sketch).

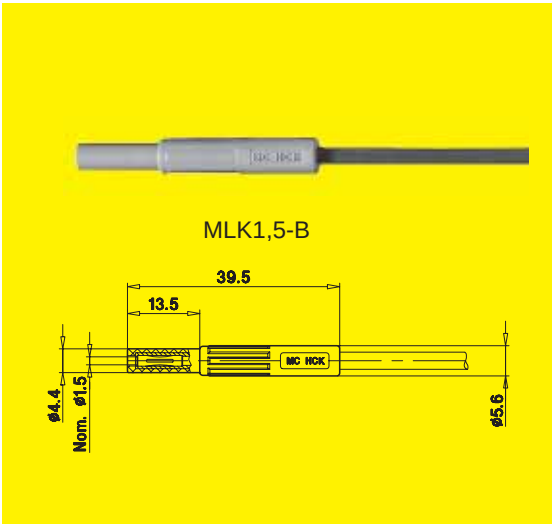

Type	Connection Lead **MLK1,5-B/SIL**
Lead cross section	0.5 mm^2
Lead insulation	Silicone
Lead operating temperature	-80°C ... +150°C
Insulator material	TPE
Withdrawal force	~ 3 N
Operating temperature insulator	-40°C ... +110°C (steam sterilisation up to +134°C)
Metal part plug	brass, gold-plated
Standard colours*	21 - 25, 29
Standard lengths:	**Order No.**
50 cm	**65.3302-050***
100 cm	**65.3302-100***
150 cm	**65.3302-150***
200 cm	**65.3302-200***

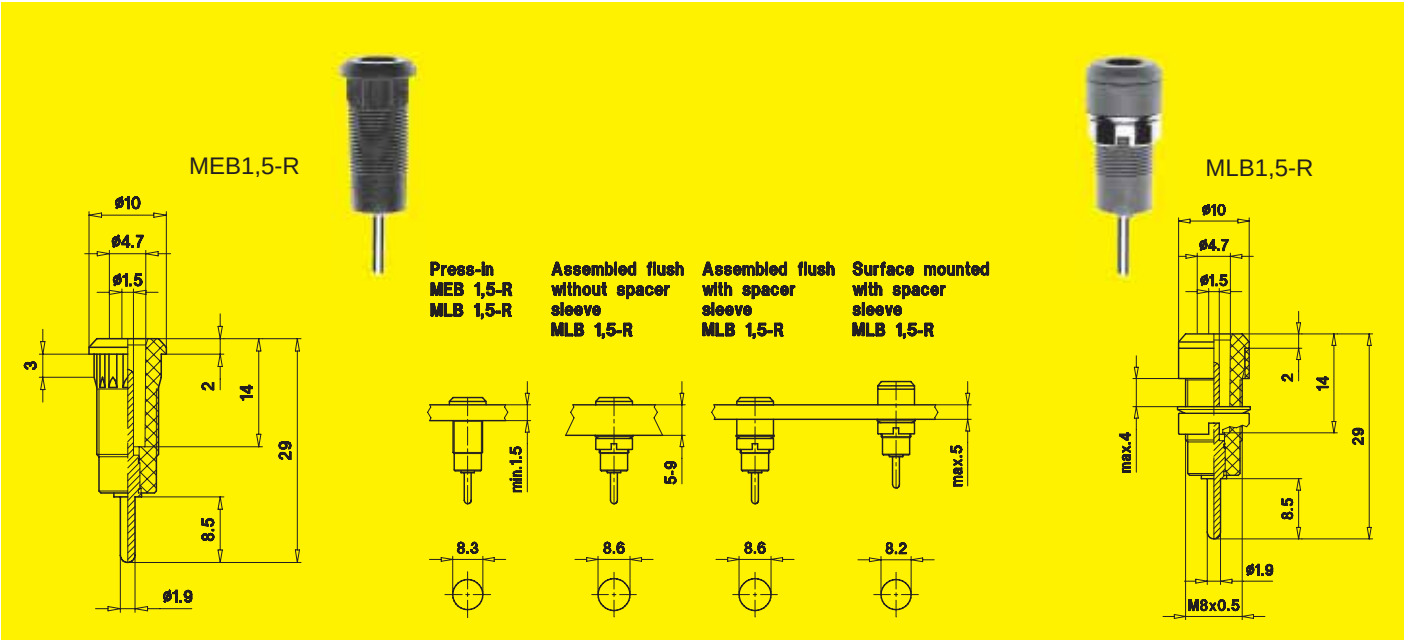

Type	Press-in socket **MEB1,5-R**	Panel-mount socket **MLB1,5-R**
Insulation	PA	PA
Operating temperature	-40°C ... +80°C	-40°C ... +80°C
Metal parts, plating	brass, gold-plated	brass, gold-plated
Terminal	ø 1.9 mm round pin	ø 1.9 mm round pin
Drill hole: plastic panels metal panels	ø 8.3$^{-0.1}$ mm ø 8.3$^{+0.1}$ mm	see sketch
Panel thickness	min. 1.5 mm	see sketch
Standard colours*	21 - 25, 29	21 - 25, 29
Order No.	**65.3301-***	**65.3300-***

Assembly tools	Assembly tool **MB2-S, Order No. 25.0028**	Counter spanner **SS4, Order No. 25.0021** Twist stop spanner **SS2-S, Order No. 25.0023**
Connection aids	Round connecting receptacle (brass, gold-plated) **RSH1,9, Order No. 23.5202**	
Assembly material	——	M8 x 0,5 round nut, spacer sleeve and washer included
Assembly instructions on request !	MA 510	MA 511

*Colour code	**20** green-yellow	**21** black	**22** red	**23** blue	**24** yellow	**25** green	**26** violet	**27** brown	**28** grey	**29** white	**30** orange	**33** transparent

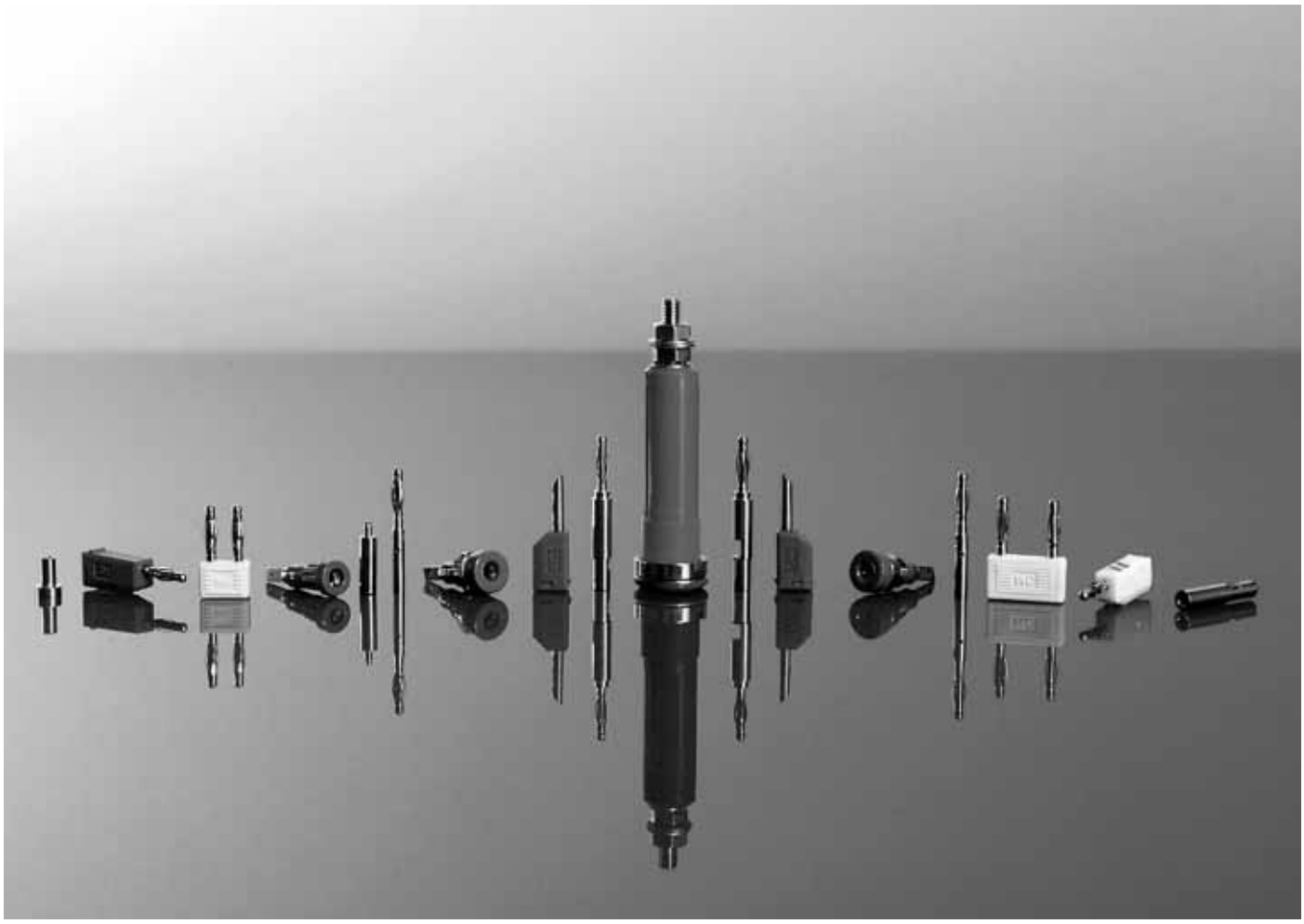

ø 2 mm - ø 3 mm connectors for voltages up to max. 30 V_{AC} / 60 V_{DC}

Like our ø 0.5 mm - ø 2 mm contact elements, our ø 2 mm - ø 3 mm connectors are not touch-protected, i.e. they are approved for voltages up to 30 V_{AC} / 60 V_{DC}.

Because of their relatively small dimensions, when space is at a premium the components of the ø 2 mm and ø 3 mm connection systems are often used in preference to the widespread ø 4 mm system.

Connecting Leads
ø 2 mm
ø 2.3 mm
ø 3 mm



Pages 32 - 39

Connecting Plugs and Bridges
ø 2 mm



Pages 44 - 47

Press-in and Panel-mount Sockets
/ Binding Posts
ø 2 mm



Pages 51 - 55

Multilam Plugs
ø 2 mm
ø 2.5 mm
ø 2.8 mm
ø 3 mm



Pages 40 - 43

Test Probes and Clips
ø 2 mm



Pages 48 - 50

Slide-in Rack Connectors
/ 2 Pole Connectors
ø 2 mm



Pages 56 - 58

☞ ø 2 mm safety test accessories – touch-protected test leads, test probes, test clips etc. – up to 600 V, CAT III according to IEC/EN 61010-2-031, you'll find in our **catalogue Lab Si** !

*Colour code	**20** green-yellow	**21** black	**22** red	**23** blue	**24** yellow	**25** green	**26** violet	**27** brown	**28** grey	**29** white	**30** orange	**33** transparent

Highly flexible connecting leads with ø 2 mm rigid plugs on both ends. Suitable to ø 2 mm spring-loaded sockets.



LK205-U LK205-U/SIL



LK-2S



LK2-S/A

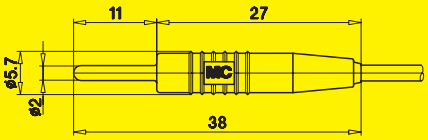

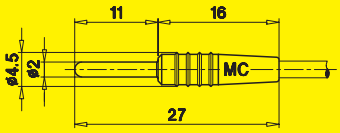

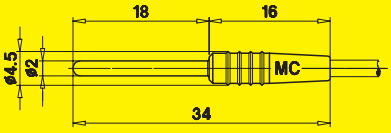

Type	LK205-U	LK205-U/SIL	LK2-S	LK2-S/A
Rated current	10 A	10 A	10 A	10 A
Lead cross section	0.5 mm²	0.5 mm²	0.5 mm²	0.5 mm²
Lead insulation	PVC	Silicone	PVC	PVC
Lead operating temperature	-10°C ... +70°C	-80°C ... +150°C	-10°C ... +70°C	-10°C ... +70°C
Insulation	PVC	PVC	PA	PA
Insulation operating temperature	-10°C ... +80°C	-10°C ... +80°C	-40°C ... +80°C	-40°C ... +80°C
Plug length	11 mm	11 mm	11 mm	18 mm
Metal parts, plating	machined brass, gold-plated	machined brass, gold-plated	machined brass, gold-plated	machined brass, gold-plated
	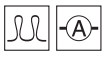		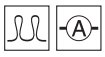	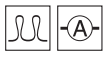
Standard colours*	21 - 22	21 - 22	20 - 29	20 - 29
Standard lengths:	**Order No.**	**Order No.**	**Order No.**	**Order No.**
7.5 cm	**28.0050-007***	**28.0051-007***	**28.0037-007***	**28.0038-007***
15 cm	**28.0050-015***	**28.0051-015***	**28.0037-015***	**28.0038-015***
30 cm	**28.0050-030***	**28.0051-030***	**28.0037-030***	**28.0038-030***
45 cm	**28.0050-045***	**28.0051-045***	**28.0037-045***	**28.0038-045***
60 cm	**28.0050-060***	**28.0051-060***	**28.0037-060***	**28.0038-060***

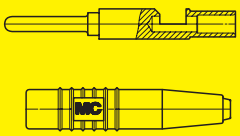

KT205-S
LS205-U

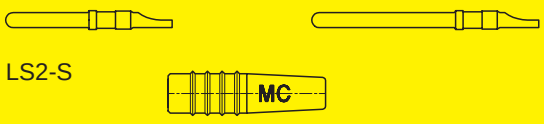

LS2-S

KT2-S

Insulator	**KT205-S, Order No. 22.2360-*** (Standard colours*: 21 - 23)		**KT2-S, Order No. 22.2010-***	
Plug	**LS205-U Order No. 22.1041**		**LS2-S Order No. 22.1002**	**LS2-S/A Order No. 22.5103**
Multistrand wires, see pages 124 - 126.	**FLEXI-E/HK 0,50 (PVC) Order No. 60.7005-***	**SILI-E 0,50 (Silicone) Order No. 61.7552-***	**FLEXI-E/HK 0,50 (PVC) Order No. 60.7005-***	
Assembly instructions on request !	MA 137		MA 132	

*Colour code	**20**	**21**	**22**	**23**	**24**	**25**	**26**	**27**	**28**	**29**	**30**	**33**
	green-yellow	black	red	blue	yellow	green	violet	brown	grey	white	orange	transparent

Highly flexible connecting and coupling leads with ø 2 mm hollow plug and with ø 2 mm in-line socket on both ends.
Types LK2-F90 and LK2-F90/SIL with 90° lead outlet.



LK2-F LK2-F/SIL



LK2-F90
LK2-F90/SIL

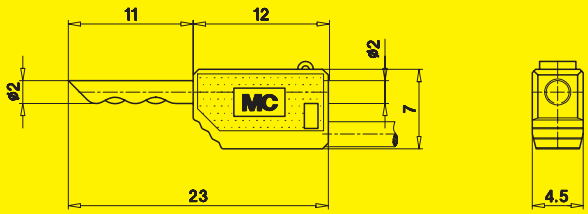

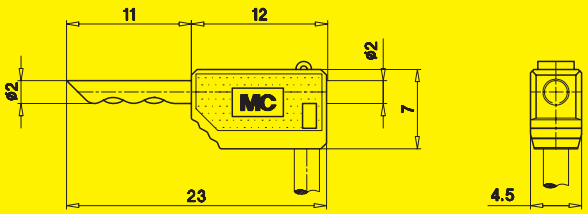

Type	LK2-F	LK2-F/SIL	LK2-F90	LK2-F90/SIL
Rated current	10 A	10 A	10 A	10 A
Contact resistance	0.6 mΩ	0.6 mΩ	0.6 mΩ	0.6 mΩ
Lead cross section	0.5 mm²	0.5 mm²	0.5 mm²	0.5 mm²
Lead insulation	PVC	Silicone	PVC	Silicone
Lead operating temperature	-10°C ... +70°C	-80°C ... +150°C	-10°C ... +70°C	-80°C ... +150°C
Insulation	PA	PA	PA	PA
Insulation operating temperature	-40°C ... +80°C	-40°C ... +80°C	-40°C ... +80°C	-40°C ... +80°C
Metal parts, plating	hard-drawn copper alloy, gold-plated			
Standard colours*	20 - 29	21 - 25	20 - 29	21 - 25
Standard lengths:	**Order No.**	**Order No.**	**Order No.**	**Order No.**
7.5 cm	**28.0033-007***	**28.0034-007***	**28.0035-007***	**28.0036-007***
15 cm	**28.0033-015***	**28.0034-015***	**28.0035-015***	**28.0036-015***
30 cm	**28.0033-030***	**28.0034-030***	**28.0035-030***	**28.0036-030***
45 cm	**28.0033-045***	**28.0034-045***	**28.0035-045***	**28.0036-045***
60 cm	**28.0033-060***	**28.0034-060***	**28.0035-060***	**28.0036-060***

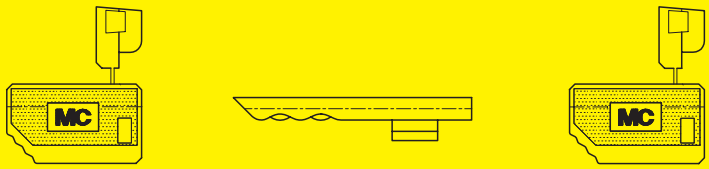

KT2-F LS2-F LS2-F/N KT2-F90

Insulator	**KT2-F, Order No. 22.2020-***		**KT2-F90, Order No. 22.2080-***	
Plug	**LS2-F, Order No. 22.1006** (gold-plated) **LS2-F/N, Order No. 22.5071** (nickel-plated)			
Multistrand wires, see pages 124 - 126.	**FLEXI-E/HK 0,50 (PVC) Order No. 60.7005-***	**SILI-E 0,50 (Silicone) Order No. 61.7552-***	**FLEXI-E/HK 0,50 (PVC) Order No. 60.7005-***	**SILI-E 0,50 (Silicone) Order No. 61.7552-***
Assembly instructions on request !	MA 133			

*Colour code	**20** green-yellow	**21** black	**22** red	**23** blue	**24** yellow	**25** green	**26** violet	**27** brown	**28** grey	**29** white	**30** orange	**33** transparent

Highly flexible connecting leads with ø 2 mm Multilam plug
and with ø 2 mm in-line socket on both ends.

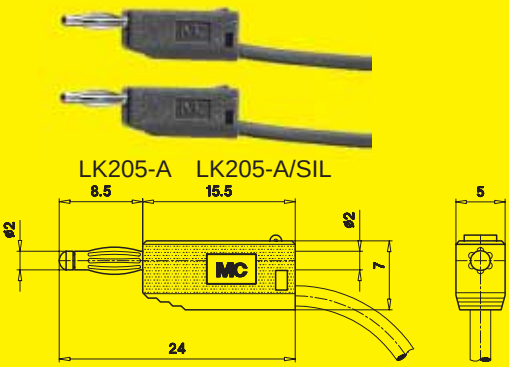

LK205-A LK205-A/SIL

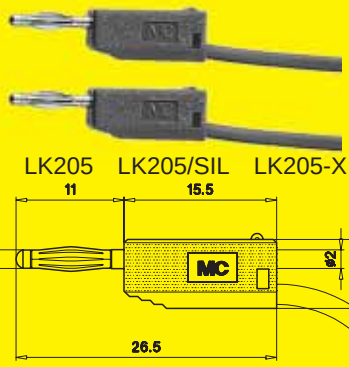

LK205 LK205/SIL LK205-X

Type	LK205-A	LK205-A/SIL	LK205	LK205/SIL	LK205-X
Rated current	10 A	10 A	10 A	10 A	10 A
Contact resistance	0.6 mΩ	0.6 mΩ	0.6 mΩ	0.6 mΩ	0.8 mΩ
Lead cross section	0.5 mm²	0.5 mm²	0.5 mm²	0.5 mm²	0.5 mm²
Lead insulation	PVC	Silicone	PVC	Silicone	PVC
Lead operating temperature	-10°C ... +70°C	-80°C ... +150°C	-10°C ... +70°C	-80°C ... +150°C	-10°C ... +70°C
Insulation	PA	PA	PA	PA	PA
Insulation operating temperature	-40°C ... +80°C	-40°C ... +80°C	-40°C ... +80°C	-40°C ... +80°C	-40°C ... +80°C
Plug length	8.5 mm	8.5 mm	11 mm	11 mm	11 mm
Metal parts, plating	plug: brass, gold-plated with Multilam: hard-drawn copper alloy, gold-plated				plug: brass, nickel-plated with Multilam: hard-drawn copper alloy, nickel-plated
Standard colours*	20 - 29	21 - 25	20 - 29	21 - 25	21 - 29
Standard lengths:	**Order No.**	**Order No.**	**Order No.**	**Order No.**	**Order No.**
7.5 cm	**28.0041-007***	**28.0042-007***	**28.0039-007***	**28.0040-007***	**28.0115-007***
15 cm	**28.0041-015***	**28.0042-015***	**28.0039-015***	**28.0040-015***	**28.0115-015***
30 cm	**28.0041-030***	**28.0042-030***	**28.0039-030***	**28.0040-030***	**28.0115-030***
45 cm	**28.0041-045***	**28.0042-045***	**28.0039-045***	**28.0040-045***	**28.0115-045***
60 cm	**28.0041-060***	**28.0042-060***	**28.0039-060***	**28.0040-060***	**28.0115-060***

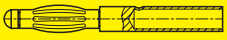

LS205-A

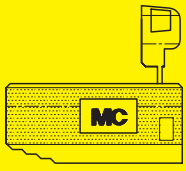

KT205



LS205

Insulator	**KT205, Order No. 22.2030-***		**KT205, Order No. 22.2030-***		Not available as separate parts !
Plug	**LS205-A, Order No. 22.5014**		**LS205, Order No. 22.1004**		
Multistrand wires, see pages 124 - 126.	**FLEXI-E/HK 0,50 (PVC) Order No. 60.7005-***	**SILI-E 0,50 (Silicone) Order No. 61.7552-***	**FLEXI-E/HK 0,50 (PVC) Order No. 60.7005-***	**SILI-E 0,50 (Silicone) Order No. 61.7552-***	
Assembly instructions on request !	MA 135		MA 134		

*Colour code	**20**	**21**	**22**	**23**	**24**	**25**	**26**	**27**	**28**	**29**	**30**	**33**
	green-yellow	black	red	blue	yellow	green	violet	brown	grey	white	orange	transparent

Highly flexible connecting leads with ø 2 mm Multilam plug on both ends.



LK205-L



LK205-S **LK205-S/SIL**

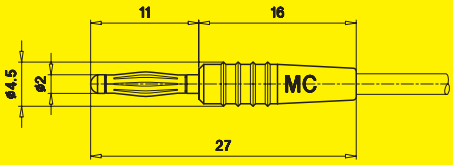

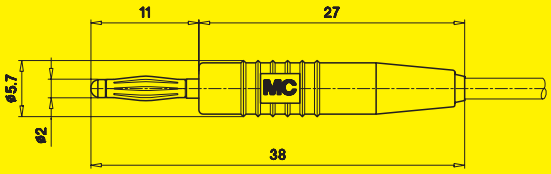

Type	LK205-L	LK205-S	LK205-S/SIL
Rated current	10 A	10 A	10 A
Contact resistance	0.6 mΩ	0.6 mΩ	0.6 mΩ
Lead cross section	0.5 mm²	0.5 mm²	0.5 mm²
Lead insulation	PVC	PVC	Silicone
Lead operating temperature	-10°C ... +70°C	-10°C ... +70°C	-80°C ... +150°C
Insulation	PA	PVC	PVC
Insulation operating temperature	-40°C ... +80°C	-10°C ... +80°C	-10°C ... +80°C
Metal parts, plating	plug: brass, gold-plated with Multilam: hard-drawn copper alloy, gold-plated		
	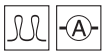		
Standard colours*	20 - 29	21 - 22	21 - 22
Standard lengths:	**Order No.**	**Order No.**	**Order No.**
7.5 cm	**28.0047-007***	**28.0048-007***	**28.0049-007***
15 cm	**28.0047-015***	**28.0048-015***	**28.0049-015***
30 cm	**28.0047-030***	**28.0048-030***	**28.0049-030***
45 cm	**28.0047-045***	**28.0048-045***	**28.0049-045***
60 cm	**28.0047-060***	**28.0048-060***	**28.0049-060***

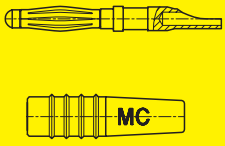

LS205-L
KT2-S

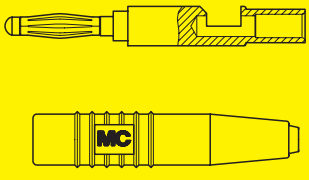

LS205-S
KT205-S

Insulator	**KT2-S, Order No. 22.2010-***	**KT205-S, Order No. 22.2360-*** (Standard colours*: 21 - 23)
Plug	**LS205-L, Order No. 22.1009**	**LS205-S, Order No. 22.1040**
Multistrand wires, see pages 124 - 126.	**FLEXI-E/HK 0,50 (PVC) Order No. 60.7005-***	**SILI-E 0,50 (Silicone) Order No. 61.7552-***
Assembly instructions on request !	MA 136	MA 137

*Colour code	20	21	22	23	24	25	26	27	28	29	30	33
	green-yellow	black	red	blue	yellow	green	violet	brown	grey	white	orange	transparent

Highly flexible extension leads with ø 2 mm rigid or spring-loaded socket on both ends.



LK205-B LK205-B/SIL



LK205-BF LK205-BF/SIL

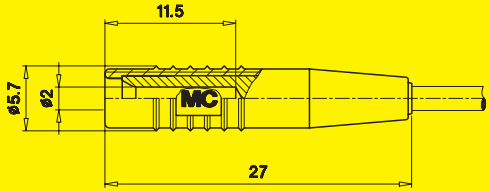

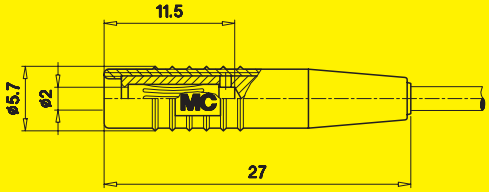

Type	LK205-B	LK205-B/SIL	LK205-BF	LK205-BF/SIL
Rated current	10 A	10 A	10 A	10 A
Contact resistance	–	–	0.5 mΩ	0.5 mΩ
Lead cross section	0.5 mm²	0.5 mm²	0.5 mm²	0.5 mm²
Lead insulation	PVC	Silicone	PVC	Silicone
Lead operating temperature	-10°C ... +70°C	-80°C ... +150°C	-10°C ... +70°C	-80°C ... +150°C
Insulation	PVC	PVC	PVC	PVC
Insulation operating temperature	-10°C ... +80°C	-10°C ... +80°C	-10°C ... +80°C	-10°C ... +80°C
Metal parts, plating	rigid socket, brass, gold-plated		spring-loaded socket, brass, gold-plated; Multilam: hard-drawn copper alloy, gold-plated	
Standard colours*	21 - 22	21 - 22	21 - 22	21 - 22
Standard lengths:	**Order No.**	**Order No.**	**Order No.**	**Order No.**
7.5 cm	**28.0043-007***	**28.0044-007***	**28.0045-007***	**28.0046-007***
15 cm	**28.0043-015***	**28.0044-015***	**28.0045-015***	**28.0046-015***
30 cm	**28.0043-030***	**28.0044-030***	**28.0045-030***	**28.0046-030***
45 cm	**28.0043-045***	**28.0044-045***	**28.0045-045***	**28.0046-045***
60 cm	**28.0043-060***	**28.0044-060***	**28.0045-060***	**28.0046-060***

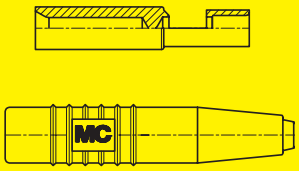

LS205-B
KT205-S

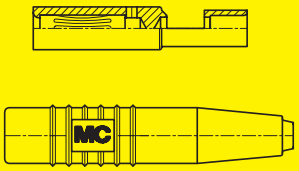

LS205-BF
KT205-S

Insulator	**KT205-S, Order No. 22.2360-*** (Standard colours*: 21 - 23)			
Socket	**LS205-B, Order No. 22.1038**		**LS205-BF, Order No. 22.1039**	
Multistrand wires, see pages 124 - 126.	**FLEXI-E/HK 0,50 (PVC) Order No. 60.7005-***	**SILI-E 0,50 (Silicone) Order No. 61.7552-***	**FLEXI-E/HK 0,50 (PVC) Order No. 60.7005-***	**SILI-E 0,50 (Silicone) Order No. 61.7552-***
Assembly instructions on request !	MA 138			

*Colour code	**20** green-yellow	**21** black	**22** red	**23** blue	**24** yellow	**25** green	**26** violet	**27** brown	**28** grey	**29** white	**30** orange	**33** transparent

High voltage and connecting lead with touch-protected ø 2 mm plugs on both ends. Suitable for high voltage socket HLB2-G, see page 55.

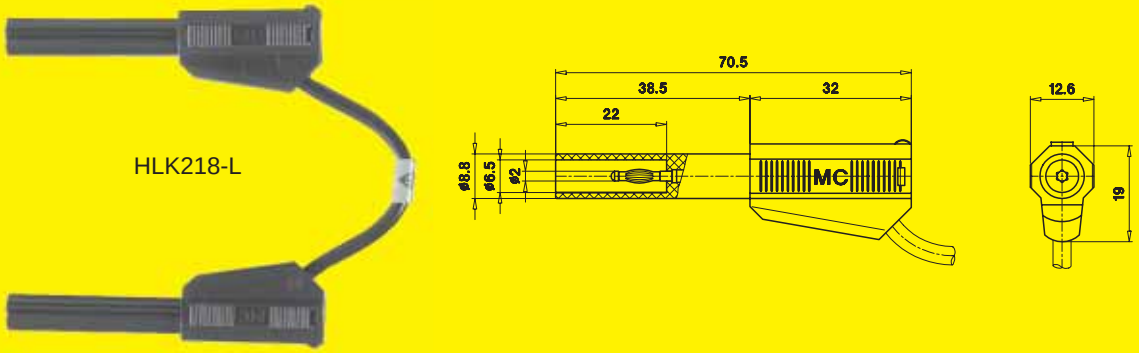

Type	HLK218-L
Rated voltage	1500 V, CAT I (secondary voltage)
Rated current	15 A
Contact resistance	0.6 mΩ
Lead cross section	0.82 mm² (AWG 18, 65 x 36 AWG)
Lead insulation	PVC
Lead operating temperature	-10°C ... +70°C
Insulation	PA
Insulation operating temperature	-40°C ... +80°C
Metal parts, plating	brass, gold-plated with Multilam, hard-drawn copper alloy, gold-plated
Standard colours*	21 - 22
Standard lengths:	**Order No.**
50 cm	**28.0015-050***
100 cm	**28.0015-100***

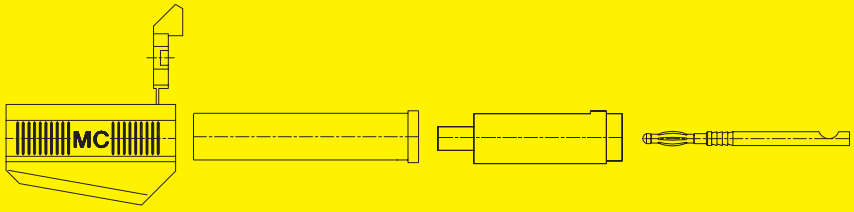

Insulator	**KT218-H, Order No. 22.2320-***, (Standard colours*: 21 - 23)
Plug	**LS218-H, Order No. 22.1033**
Multistrand wires, see pages 124 - 126.	**HK18-H (PVC), Order No. 22.0110-***
Consult supplementary label !	RZ 020
Assembly instructions on request !	MA 139

*Colour code	**20**	**21**	**22**	**23**	**24**	**25**	**26**	**27**	**28**	**29**	**30**	**33**
	green-yellow	black	red	blue	yellow	green	violet	brown	grey	white	orange	transparent

Highly flexible connecting and coupling leads with ø 2.3 mm hollow plug and ø 2.3 mm in-line socket on both ends.
Types LK2,3-F90 and LK2,3-F90/SIL with 90° lead outlet.



LK2,3-F LK2,3-F/SIL



LK2,3-F90
LK2,3-F90/SIL

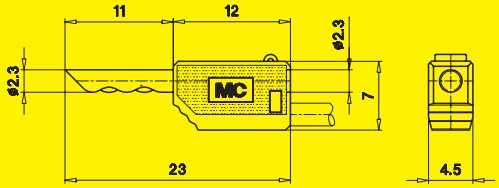

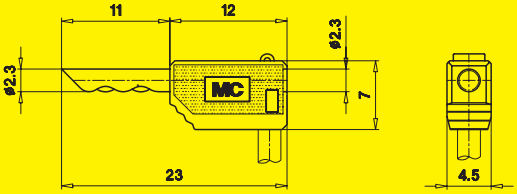

Type	LK2,3-F	LK2,3-F/SIL	LK2,3-F90	LK2,3-F90/SIL
Rated current	10 A	10 A	10 A	10 A
Contact resistance	0.6 mΩ	0.6 mΩ	0.6 mΩ	0.6 mΩ
Lead cross section	0.5 mm²	0.5 mm²	0.5 mm²	0.5 mm²
Lead insulation	PVC	Silicone	PVC	Silicone
Lead operating temperature	-10°C ... +70°C	-80°C ... +150°C	-10°C ... +70°C	-80°C ... +150°C
Insulation	PA	PA	PA	PA
Insulation operating temperature	-40°C ... +80°C	-40°C ... +80°C	-40°C ... +80°C	-40°C ... +80°C
Metal parts, plating	hard-drawn copper alloy, gold-plated			
	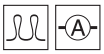		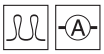	
Standard colours*	20 - 29	21 - 25	20 - 29	21 - 25
Standard lengths:	**Order No.**	**Order No.**	**Order No.**	**Order No.**
7.5 cm	**28.0029-007***	**28.0030-007***	**28.0031-007***	**28.0032-007***
15 cm	**28.0029-015***	**28.0030-015***	**28.0031-015***	**28.0032-015***
30 cm	**28.0029-030***	**28.0030-030***	**28.0031-030***	**28.0032-030***
45 cm	**28.0029-045***	**28.0030-045***	**28.0031-045***	**28.0032-045***
60 cm	**28.0029-060***	**28.0030-060***	**28.0031-060***	**28.0032-060***

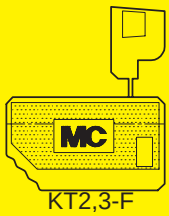

KT2,3-F



LS2,3-F

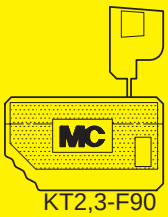

KT2,3-F90

Insulator	**KT2,3-F, Order No. 22.2090-***		**KT2,3-F90, Order No. 22.2100-***	
Plug	**LS2,3-F, Order No. 22.1003**			
Multistrand wires, see pages 124 - 126.	**FLEXI-E/HK 0,50 (PVC) Order No. 60.7005-***	**SILI-E 0,50 (Silicone) Order No. 61.7552-***	**FLEXI-E/HK 0,50 (PVC) Order No. 60.7005-***	**SILI-E 0,50 (Silicone) Order No. 61.7552-***
Assembly instructions on request !	MA 133			

*Colour code	**20**	**21**	**22**	**23**	**24**	**25**	**26**	**27**	**28**	**29**	**30**	**33**
	green-yellow	black	red	blue	yellow	green	violet	brown	grey	white	orange	transparent

Highly flexible connecting leads with ø 3 mm Multilam plug on both ends.

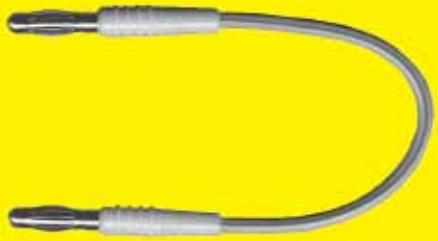

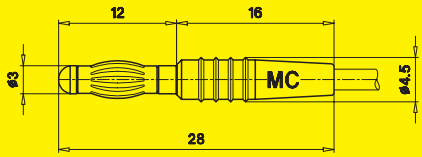

Type	LK305-L
Rated current	10 A
Contact resistance	0.6 mΩ
Lead cross section	0.5 mm²
Lead insulation	PVC
Lead operating temperature	-10°C ... +70°C
Insulation	PA
Insulation operating temperature	-40°C ... +80°C
Metal parts, plating	plug: brass, gold-plated with Multilam: hard-drawn copper alloy, gold-plated
	
Standard colours*	20 - 29
Standard lengths:	**Order No.**
7.5 cm	**28.0052-007***
15 cm	**28.0052-015***
30 cm	**28.0052-030***
45 cm	**28.0052-045***
60 cm	**28.0052-060***



KT2-S



LS305-L

Insulator	**KT2-S, Order No. 22.2010-***
Plug	**LS305-L, Order No. 22.5108**
Multistrand wires, see pages 124 - 126.	**FLEXI-E/HK 0,50 (PVC), Order No. 60.7005-***
Assembly instructions on request !	MA 141

*Colour code	**20**	**21**	**22**	**23**	**24**	**25**	**26**	**27**	**28**	**29**	**30**	**33**
	green-yellow	black	red	blue	yellow	green	violet	brown	grey	white	orange	transparent

The plugs made of machined brass have a recess which serves as a seat for the freely movable Multilam contact cage. It is punched from rigid hard-drawn copper alloy sheet, rolled and formed so that the louvres bulge outward.

The spring action of the louvres provides constant pressure in the plugged condition.
The Multilam plugs in the gold-plated versions have a very low contact resistance.

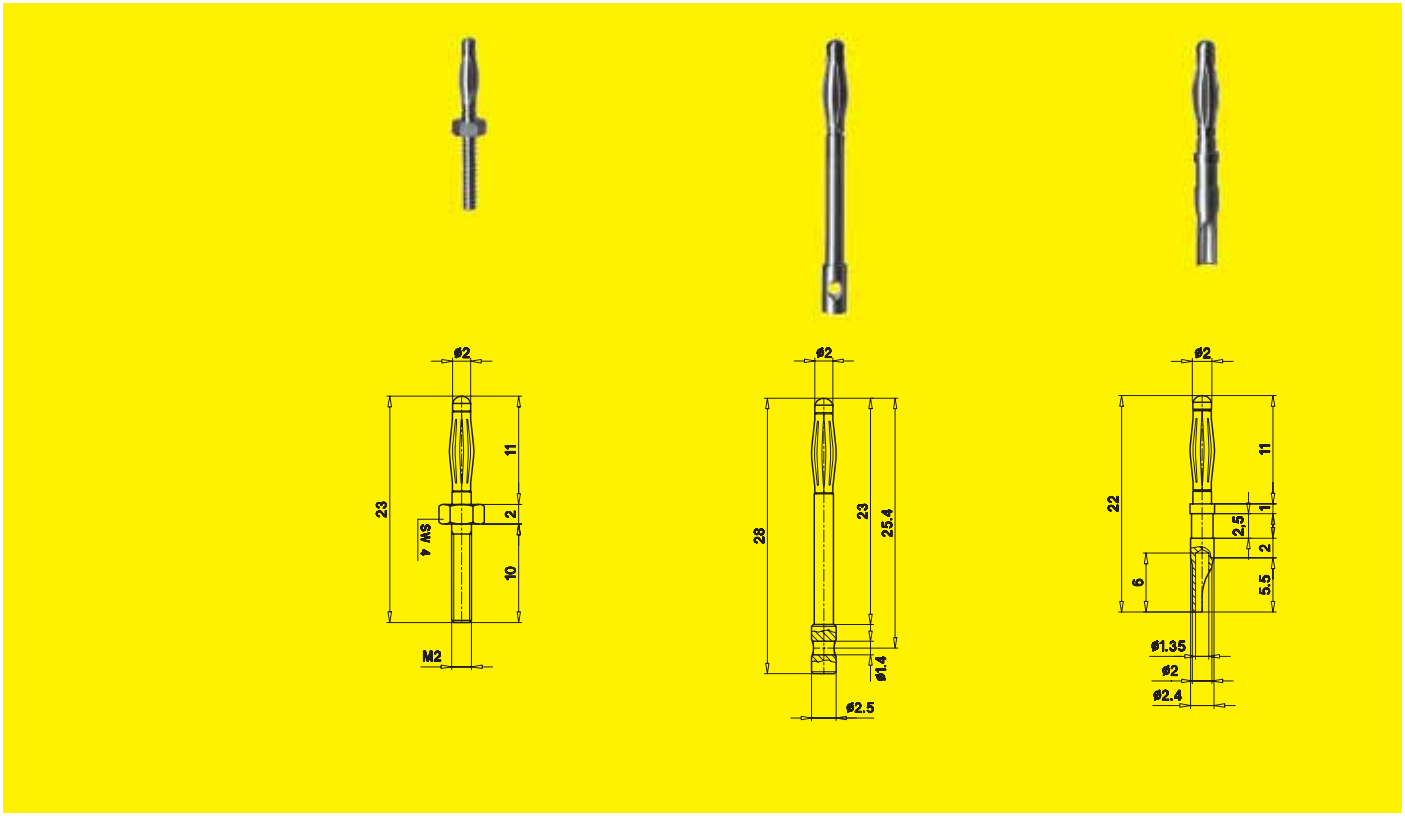

Type	SA200	SA203	LS205-L
Rated current (according to connecting method and cross-section)	max. 25 A	max. 25 A	max. 25 A
Contact resistance	0.4 mΩ	1 mΩ	0.4 mΩ
Nominal diameter	ø 2 mm	ø 2 mm	ø 2 mm
Withdrawal force	~ 4 N	~ 4 N	~ 4 N
Upper limit of temperature	+150°C	+150°C	+150°C
Metal parts, plating	machined brass, gold-plated with Multilam, hard-drawn copper alloy, gold-plated	machined brass, nickel-plated with Multilam, hard-drawn copper alloy, nickel-plated	machined brass, gold-plated with Multilam, hard-drawn copper alloy, gold-plated
Rear connection / assembly	thread M2	ø 1.4 mm cross hole for solder connection	solder connection
	A	A	A
Order No.	**22.1100**	**22.6303**	**22.1009**

Assembly material (is not supplied)	nut **MU0,5D/M2**, DIN 439, brass, gold-plated, **Order No. 22.6601**	–	–
	nut **MU0,8D/M2**, DIN 934, brass, gold-plated, **Order No. 22.6501**		
	U-washer **U/M2**, DIN 125, brass, gold-plated, **Order No. 22.6503**		
	serrated lock washer **FS/M2**, DIN 6798, spring bronze, **Order No. 22.6530**		

*Colour code	**20**	**21**	**22**	**23**	**24**	**25**	**26**	**27**	**28**	**29**	**30**	**33**
	green-yellow	black	red	blue	yellow	green	violet	brown	grey	white	orange	transparent

The plugs made of machined brass have a recess which serves as a seat for the freely movable Multilam contact cage. It is punched from rigid hard-drawn copper alloy sheet, rolled and formed so that the louvres bulge outward.

The spring action of the louvres provides constant pressure in the plugged condition.
The Multilam plugs in the gold-plated versions have a very low contact resistance.

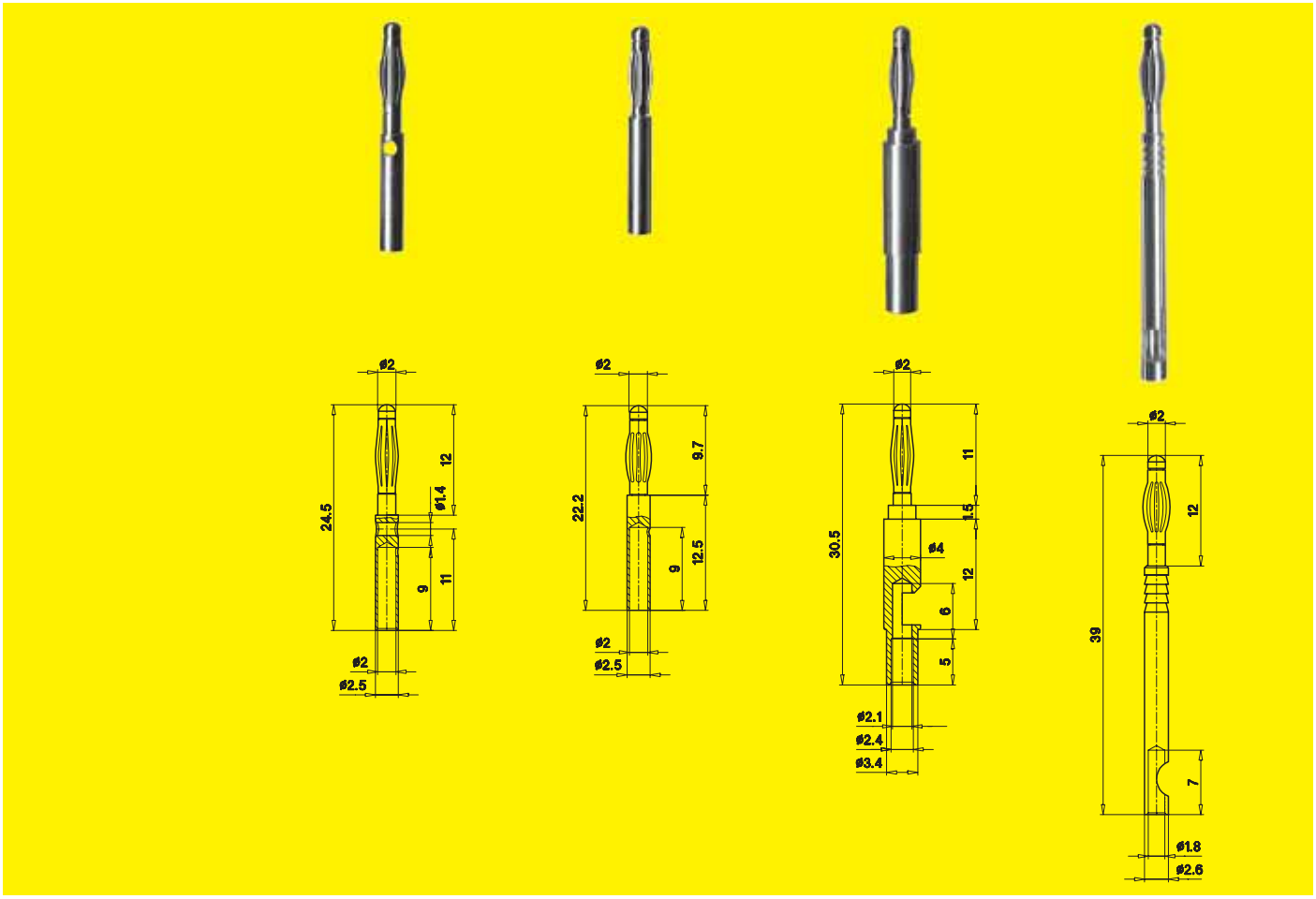

Typ	LS205	LS205-A	LS205-S	LS218-H
Rated current (according to connecting method and cross-section)	max. 25 A	max. 25 A	max. 25 A	max. 25 A
Contact resistance	0.4 mΩ	0.4 mΩ	0.4 mΩ	0.4 mΩ
Nominal diameter	ø 2 mm	ø 2 mm	ø 2 mm	ø 2 mm
Withdrawal force	~ 4 N	~ 10 N	~ 4 N	~ 10 N
Upper limit of temperature	+150°C	+150°C	+150°C	+150°C
Metal parts, plating	machined brass, gold-plated with Multilam, hard-drawn copper alloy, gold-plated			
Rear connection / assembly	ø 2 mm socket and ø 1.8 mm cross hole for solder connection	ø 2 mm socket	solder connection	solder connection
	A	A	A	A
Order No.	**22.1004**	**22.5014**	**22.1040**	**22.1033**

*Colour code	20	21	22	23	24	25	26	27	28	29	30	33
	green-yellow	black	red	blue	yellow	green	violet	brown	grey	white	orange	transparent

The plugs made of machined brass have a recess which serves as a seat for the freely movable Multilam contact cage. It is punched from rigid hard-drawn copper alloy sheet, rolled and formed so that the louvres bulge outward.

The spring action of the louvres provides constant pressure in the plugged condition.
The Multilam plugs in the gold-plated versions have a very low contact resistance.

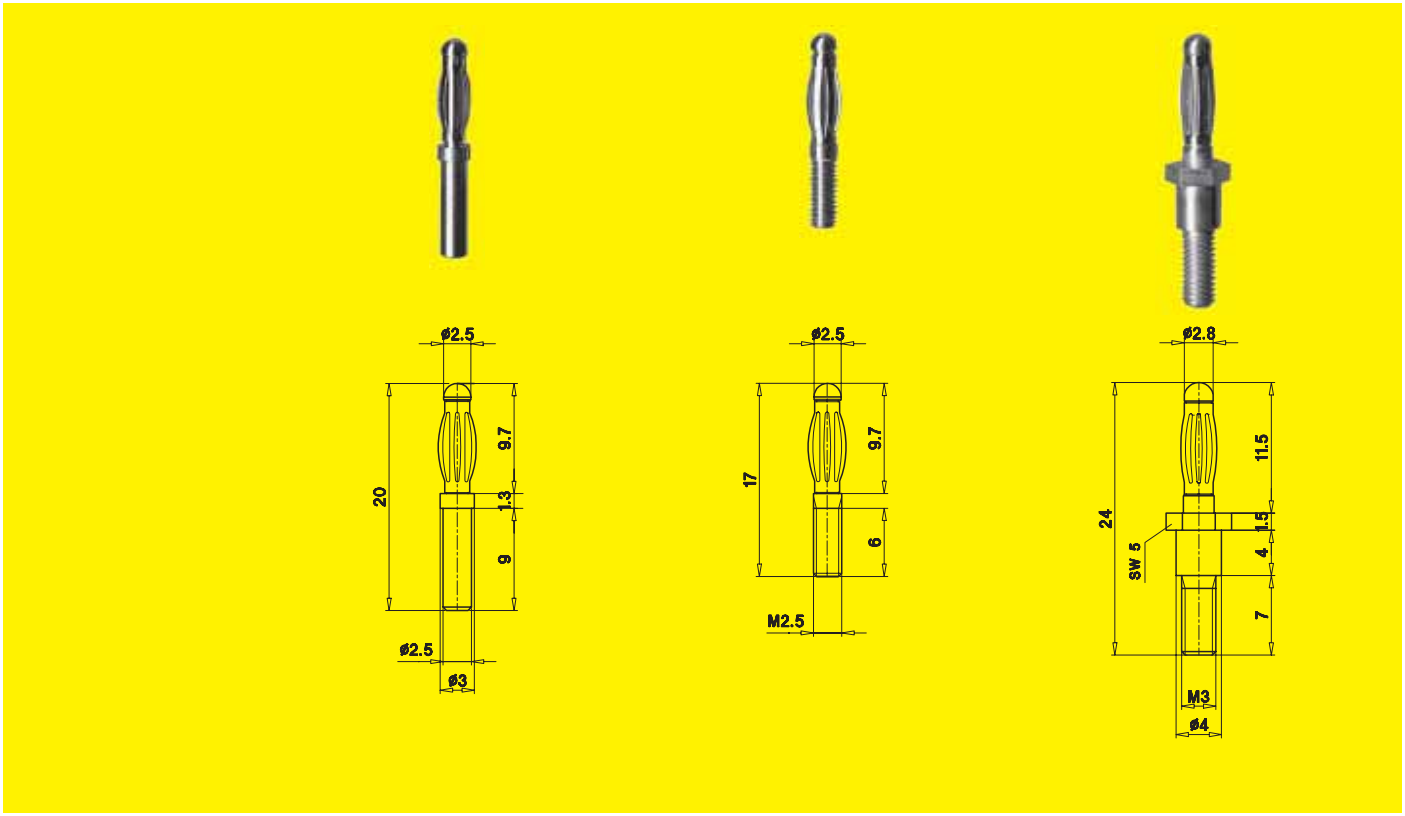

Type	SA2,5	SA2,5-G	SA2,8
Rated current (according to connecting method and cross-section)	max. 25 A	max. 25 A	max. 25 A
Contact resistance	0.5 mΩ	0.5 mΩ	0.5 mΩ
Nominal diameter	ø 2.5 mm	ø 2.5 mm	ø 2.8 mm
Withdrawal force	~ 6 N	~ 6 N	~ 3 N
Upper limit of temperature	+150°C	+150°C	+150°C
Metal parts, plating	machined brass, gold-plated with Multilam, hard-drawn copper alloy, gold-plated		
Rear connection / assembly	–	thread M2.5	thread M3
	A	A	A
Order No.	**22.5118**	**22.5117**	**22.5107**

Assembly material (is not supplied)	–	nut **MU0,5D/M2,5**, DIN 439, brass, gold-plated, **Order No. 22.6603**	nut **MU0,5D/M3**, DIN 439, brass, gold-plated, **Order No. 22.6605**
		nut **MU0,8D/M2,5**, DIN 934, brass, gold-plated, **Order No. 22.6519**	nut **MU0,8D/M3**, DIN 934, brass, gold-plated, **Order No. 22.6505**
		U-washer **U/M2,5**, DIN 125, brass, gold-plated, **Order No. 22.6521**	U-washer **U/M3**, DIN 125, brass, gold-plated, **Order No. 22.6507**
		serrated lock washer **FS/M2,5**, DIN 6798, spring bronze, **Order No. 22.6531**	serrated lock washer **FS/M3**, DIN 6798, spring bronze, **Order No. 22.6532**

*Colour code	**20**	**21**	**22**	**23**	**24**	**25**	**26**	**27**	**28**	**29**	**30**	**33**
	green-yellow	black	red	blue	yellow	green	violet	brown	grey	white	orange	transparent

The plugs made of machined brass have a recess which serves as a seat for the freely movable Multilam contact cage. It is punched from rigid hard-drawn copper alloy sheet, rolled and formed so that the louvres bulge outward.

The spring action of the louvres provides constant pressure in the plugged condition.
The Multilam plugs in the gold-plated versions have a very low contact resistance.

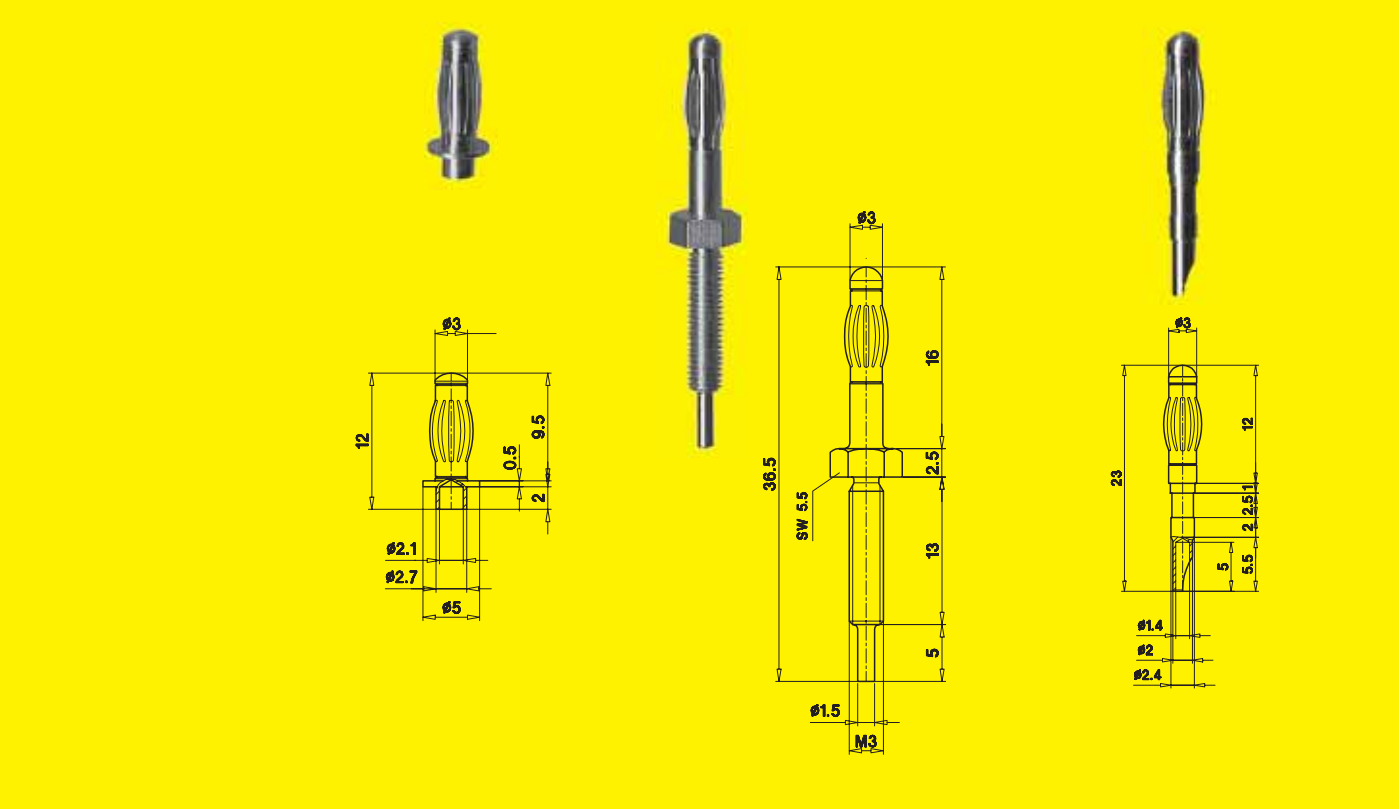

Type	SA300	SA301	LS305-L
Rated current (according to connecting method and cross-section)	30 A	30 A	30 A
Contact resistance	0.5 mΩ	0.5 mΩ	0.5 mΩ
Nominal diameter	ø 3 mm	ø 3 mm	ø 3 mm
Withdrawal force	~ 5 N	~ 2.5 N	~ 2.5 N
Upper limit of temperature	+150°C	+150°C	+150°C
Metal parts, plating	machined brass, gold-plated with Multilam, hard-drawn copper alloy, gold-plated		
Rear connection / assembly	solder connection	thread M3	solder connection
	A	A	A
Order No.	**22.1110**	**22.1111**	**22.5108**

Assembly material (is not supplied)	–	nut **MU0,5D/M3**, DIN 439, brass, gold-plated, **Order No. 22.6605**	–
		nut **MU0,8D/M3**, DIN 934, brass, gold-plated, **Order No. 22.6505**	
		U-washer **U/M3**, DIN 125, brass, gold-plated, **Order No. 22.6507**	
		serrated lock washer **FS/M3**, DIN 6798, spring bronze, **Order No. 22.6532**	

*Colour code	**20**	**21**	**22**	**23**	**24**	**25**	**26**	**27**	**28**	**29**	**30**	**33**
	green-yellow	black	red	blue	yellow	green	violet	brown	grey	white	orange	transparent

ø 2 mm connecting plugs, made from a single piece of hard-drawn copper alloy and gold-plated, PA insulation.

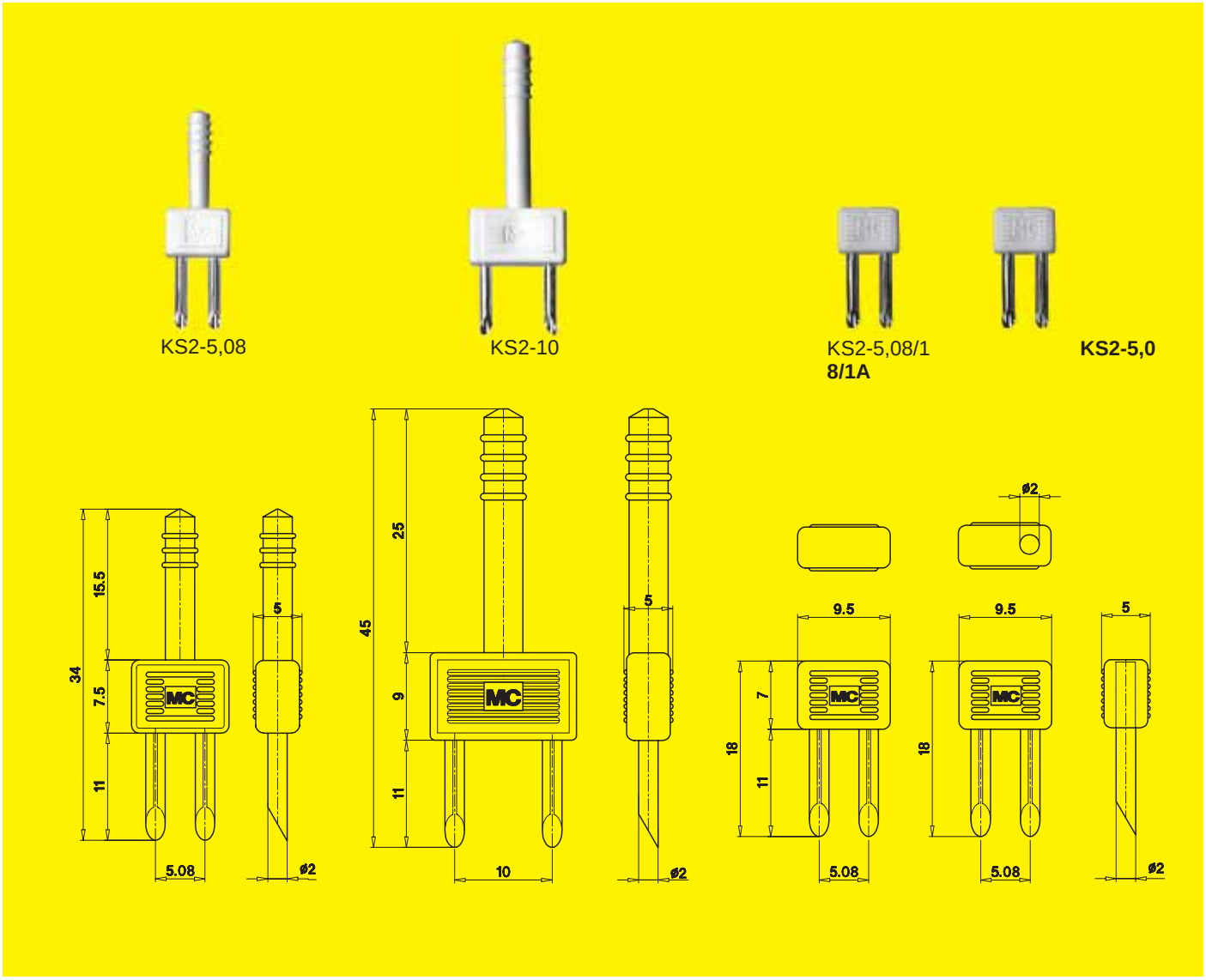

Type	KS2-5,08	KS2-10	KS2-5,08/1	KS2-5,08/1A
Rated current	10 A	10 A	10 A	10 A
Contact resistance	0.6 mΩ	0.6 mΩ	0.6 mΩ	0.6 mΩ
Insulation	PA	PA	PA	PA
Temperature range	-40°C ... +70°C	-40°C ... +70°C	-40°C ... +70°C	-40°C ... +70°C
Metal parts, plating	hard-drawn copper, gold-plated	hard-drawn copper, gold-plated	hard-drawn copper, gold-plated	hard-drawn copper, gold-plated
Design	insulated plug, with handle at rear	insulated plug, with handle at rear	insulated plug	insulated plug with tapping from the rear with ø 2 mm hollow plug
	-Ⓐ-	-Ⓐ-	-Ⓐ-	-Ⓐ-
Standard colour*	white	white	white	white
Order No.	**24.0010-29**	**24.0011-29**	**24.0012-29**	**24.0013-29**

*Colour code	**20** green-yellow	**21** black	**22** red	**23** blue	**24** yellow	**25** green	**26** violet	**27** brown	**28** grey	**29** white	**30** orange	**33** transparent

KB2-10
ø 2 mm connecting bridge, made from a single piece of hard-drawn copper alloy and gold-plated, PA insulation. Suitable to ø 2 mm rigid plugs.

KS2-5,08L, S-KS2-5,08L
ø 2 mm connecting plugs made of brass, one piece, gold-plated and furnished with the proven MC®-Multilam. PA insulated or uninsulated.

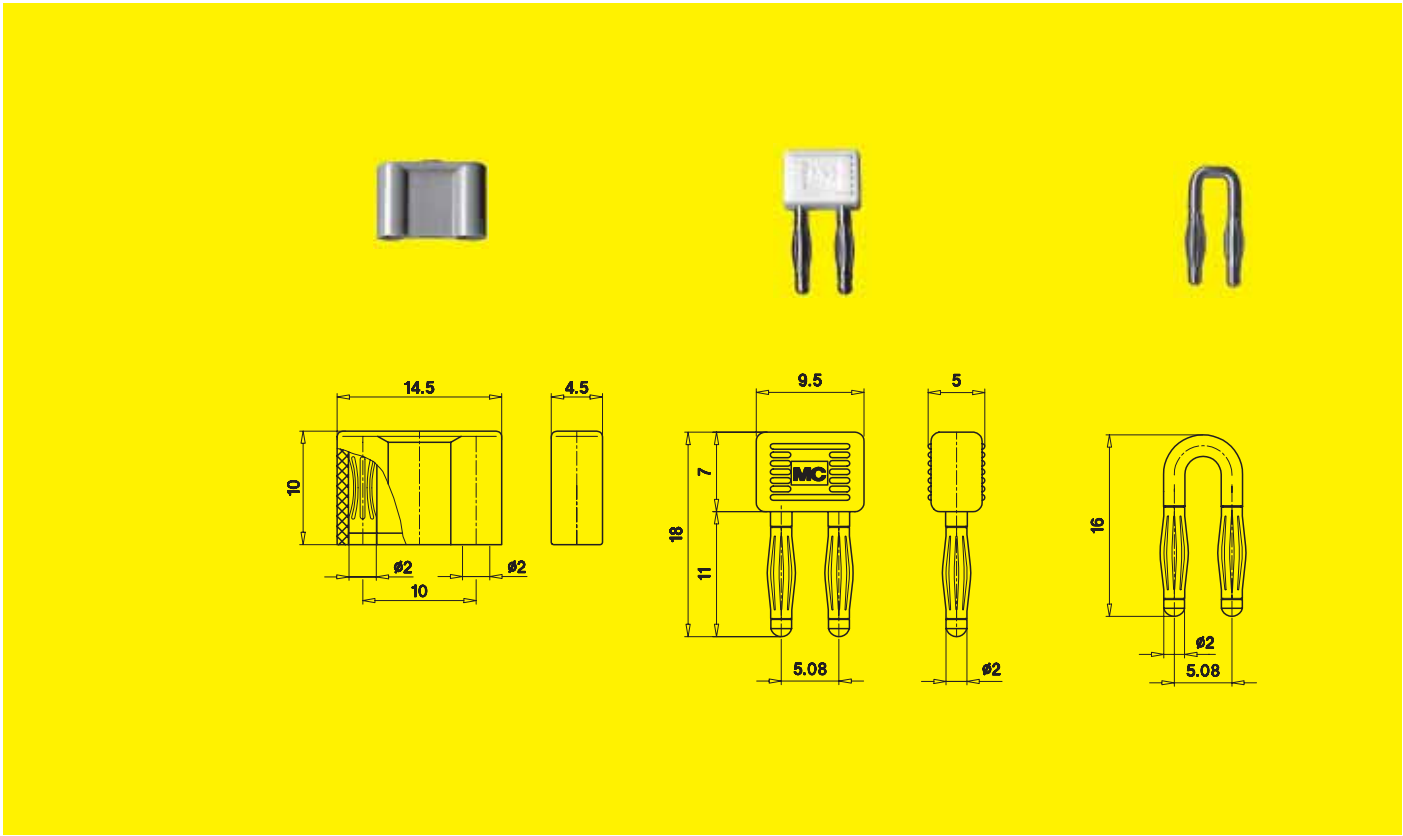

Type	KB2-10	KS2-5,08L	S-KS2-5,08L
Rated current	10 A	10 A	10 A
Contact resistance	0.6 mΩ	0.6 mΩ	0.6 mΩ
Insulation	PA	PA	–
Temperature range	-40°C ... +80°C	-40°C ... +80°C	–
Metal parts, plating	hard-drawn copper, gold-plated	brass, gold-plated	brass, gold-plated
Design	insulated bridge	insulated plug	uninsulated plug
	-Ⓐ-	-Ⓐ-	-Ⓐ-
Standard colour*	22 - 24, 28	white	–
Order No.	**24.0051-***	**24.0040-29**	**24.5042**

*Colour code	**20** green-yellow	**21** black	**22** red	**23** blue	**24** yellow	**25** green	**26** violet	**27** brown	**28** grey	**29** white	**30** orange	**33** transparent

ø 2 mm connecting plugs, gold-plated and furnished with the proven MC®-Multilam. PA insulated or uninsulated.

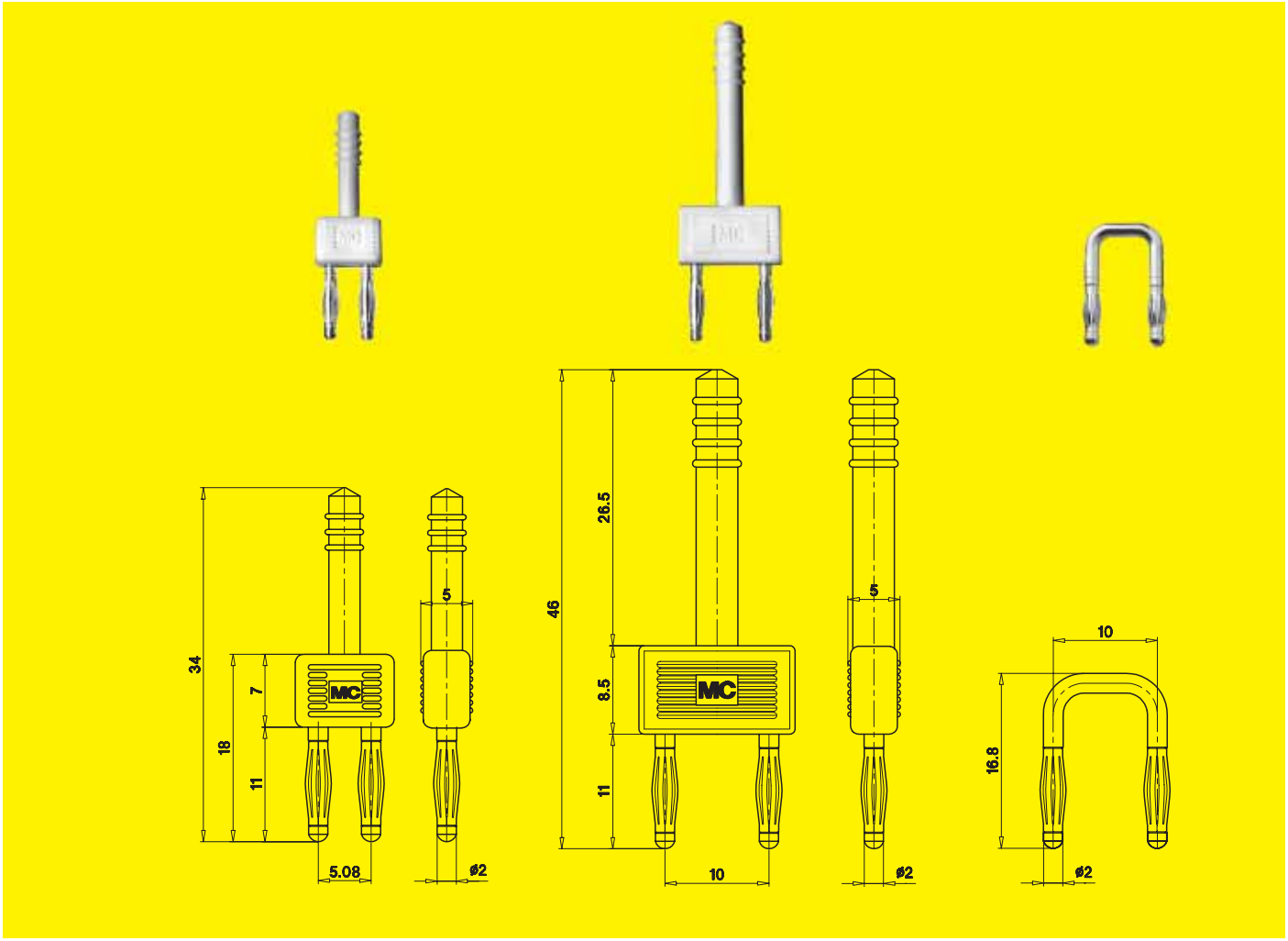

Type	KS2-5,08L/1	KS2-10L	S-KS2-10L
Rated current	10 A	10 A	10 A
Contact resistance	0.6 mΩ	0.6 mΩ	0.6 mΩ
Insulation	PA	PA	–
Temperature range	-40°C ... +80°C	-40°C ... +80°C	–
Metal parts, plating	brass, gold-plated	brass, gold-plated	brass, gold-plated
Design	insulated plug, with handle at rear	insulated plug, with handle at rear	uninsulated plug
	-Ⓐ-	-Ⓐ-	-Ⓐ-
Standard colours*	white	white	–
Order No.	**24.0046-29**	**24.0042-29**	**24.5045**

*Colour code	**20** green-yellow	**21** black	**22** red	**23** blue	**24** yellow	**25** green	**26** violet	**27** brown	**28** grey	**29** white	**30** orange	**33** transparent

ø 2 mm connecting plugs, gold-plated and furnished with the proven MC®-Multilam. PA insulated or uninsulated.

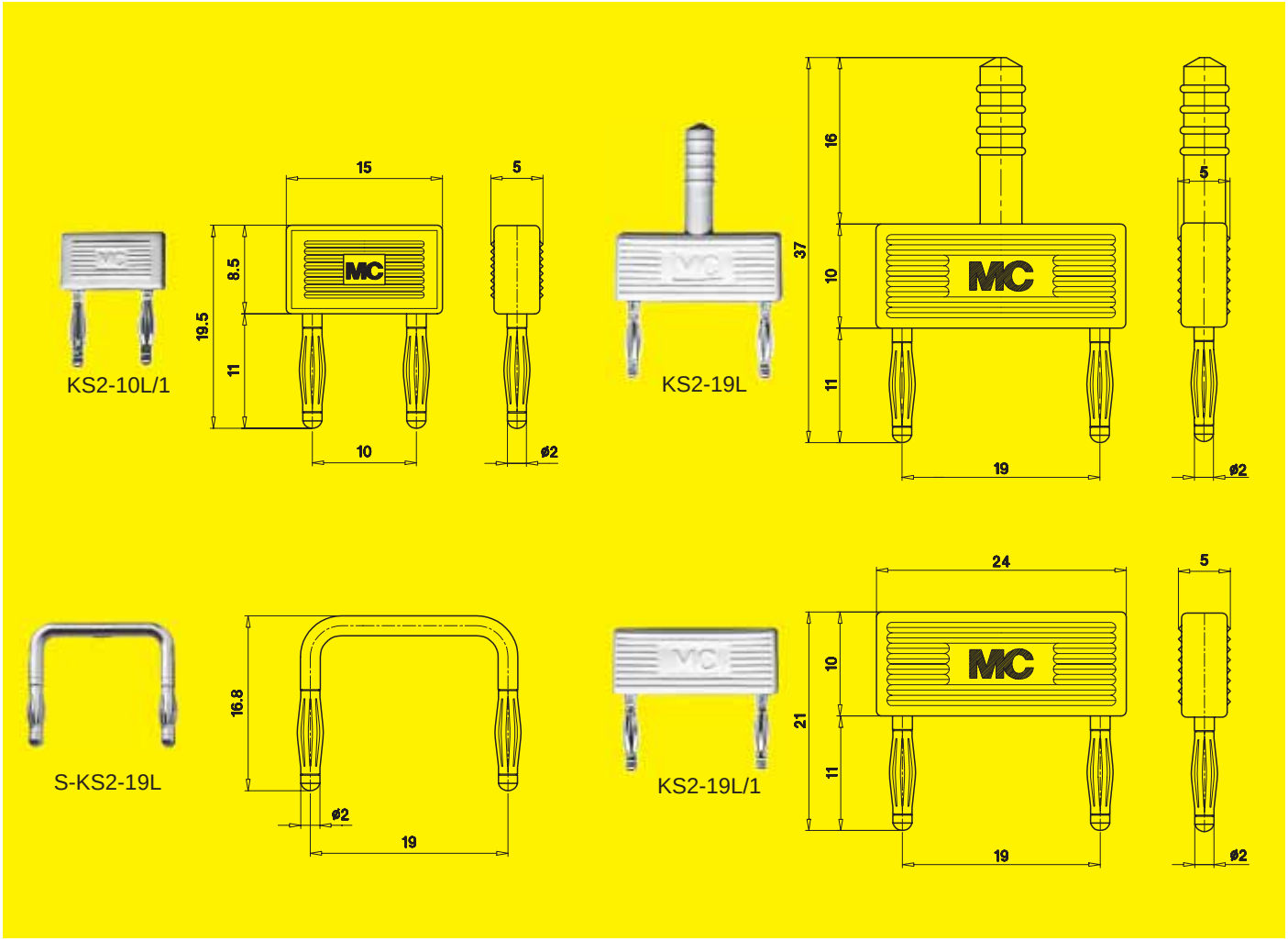

Type	KS2-10L/1	KS2-19L	S-KS2-19L	KS2-19L/1
Rated current	10 A	10 A	10 A	10 A
Contact resistance	0.6 mΩ	0.6 mΩ	0.6 mΩ	0.6 mΩ
Insulation	PA	PA	–	PA
Temperature range	-40°C ... +80°C	-40°C ... +80°C	–	-40°C ... +80°C
Metal parts, plating	brass, gold-plated	brass, gold-plated	brass, gold-plated	brass, gold-plated
Design	insulated plug	insulated plug, with handle at rear	uninsulated plug	insulated plug
	-Ⓐ-	-Ⓐ-	-Ⓐ-	-Ⓐ-
Standard colours*	white	white	–	white
Order No.	**24.0043-29**	**24.0044-29**	**24.5048**	**24.0045-29**

*Colour code	20	21	22	23	24	25	26	27	28	29	30	33
	green-yellow	black	red	blue	yellow	green	violet	brown	grey	white	orange	transparent

Test probe lead, suitable for tapping the ø 1 mm connecting bridge KB1-5,08, KB0,63-0,8-5,08, soldering points on printed circuit boards and insulated conductors.

One side a gold-plated steel needle. Other side with a spring ø 2 mm hollow plug. Suitable to connect into ø 2 mm sockets or onto ø 2 mm pins.

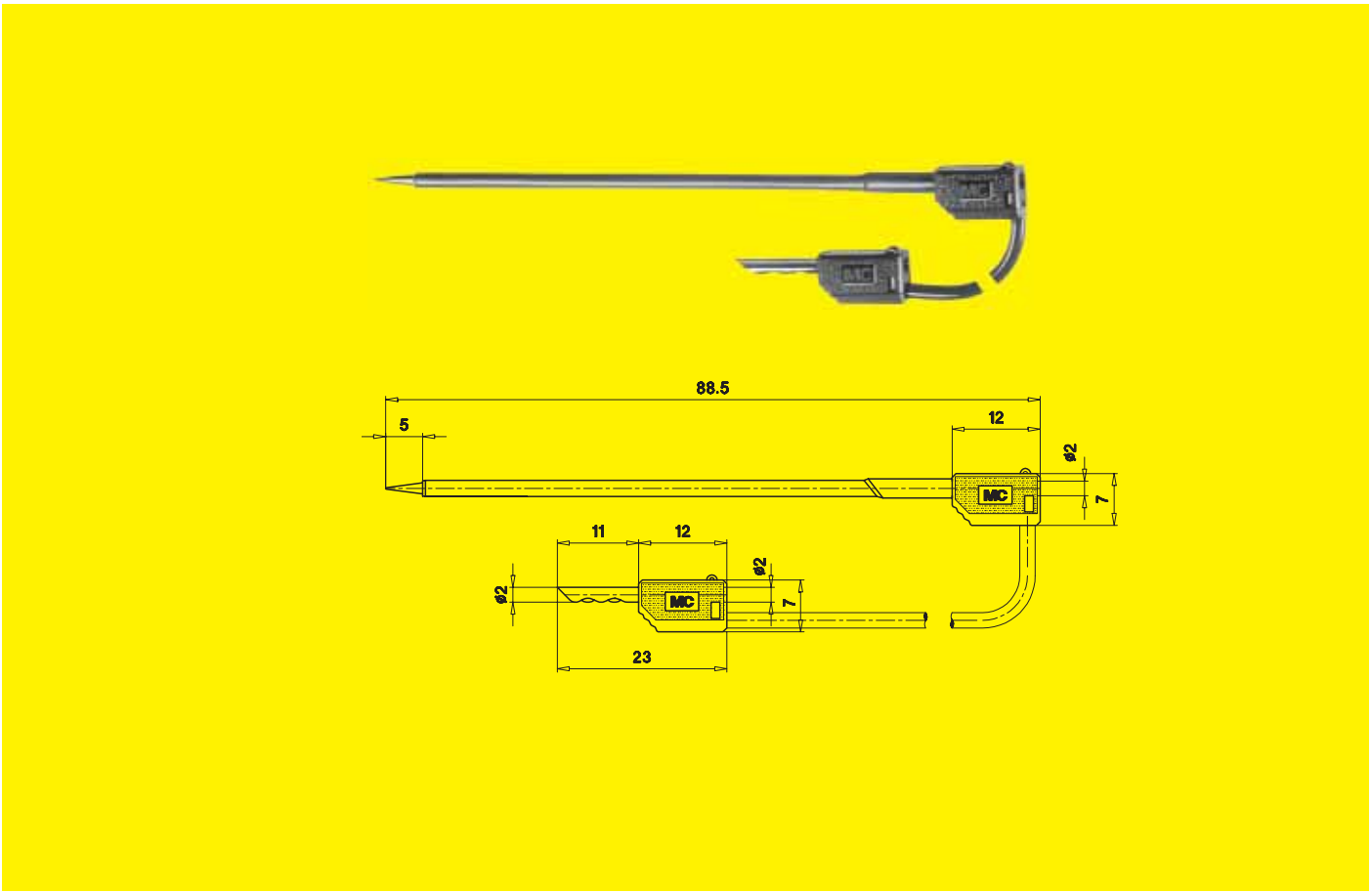

Type	PPK1
Contact resistance	0.6 mΩ (for plug only)
Lead cross section	0.5 mm^2
Insulation	test probe: PA and shrinkable tubing, polyolefin plug: PA lead: PVC
Operating temperature	-10°C ... +70°C
Metal parts, plating	test probe: steel needle, gold-plated plug: hard-drawn copper alloy, gold-plated
Standard colours*	21 - 23
Standard length:	45 cm
Order No.	**28.0082-045***

*Colour code	**20** green-yellow	**21** black	**22** red	**23** blue	**24** yellow	**25** green	**26** violet	**27** brown	**28** grey	**29** white	**30** orange	**33** transparent

PP1:
Test probe, suitable for tapping the ø 1 mm connecting bridge KB1-5,08, KB0,63-0,8-5,08, soldering points on printed circuit boards and insulated conductors. Spring-loaded ø 2 mm socket in handle.

PP-70/2:
Test probe with stainless steel needle ground to a sharp point, insulated with a shrink-on sleeve except for the short contact area. ø 2 mm rigid socket in handle for accepting ø 2 mm spring-loaded plugs.

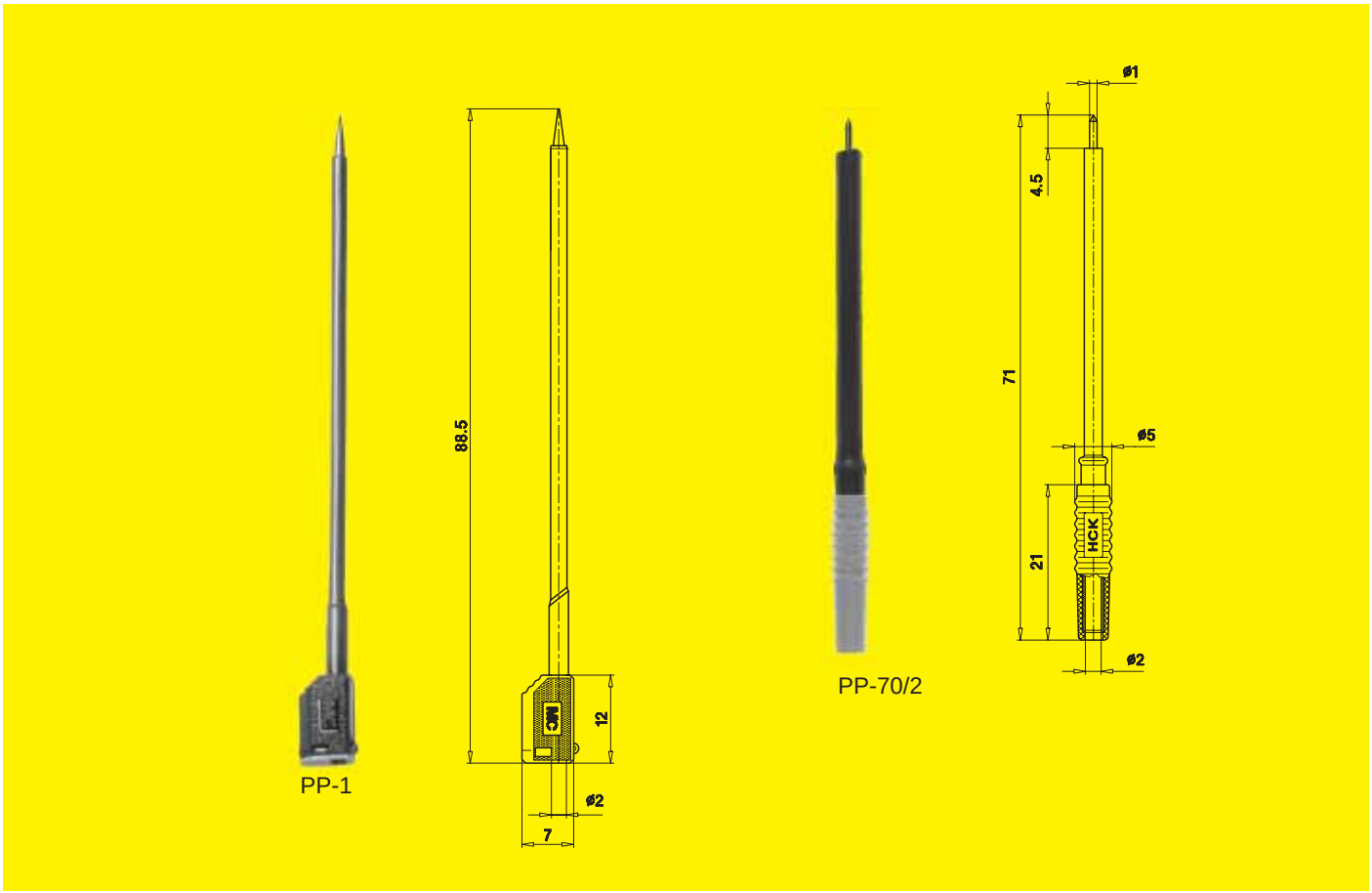

Type	PP1	PP-70/2
Insulation	PA and shrinkable tubing, polyolefin	PA and shrinkable tubing, polyolefin
Operating temperature	-10°C ... +70°C	-10°C ... +70°C
Tip	steel needle, gold-plated	stainless steel needle, ground to a sharp point
Terminal	ø 2 mm spring-loaded socket	ø 2 mm rigid socket
Standard colours*	21 - 23	21 - 25, 29
Order No.	**24.0229-***	**63.9181-***

*Colour code	**20**	**21**	**22**	**23**	**24**	**25**	**26**	**27**	**28**	**29**	**30**	**33**
	green-yellow	black	red	blue	yellow	green	violet	brown	grey	white	orange	transparent

AGK40:
Miniature crocodile clip with unbreakable insulation. Fine-wire gripping surface, nade of brass, tin-plated. ø 2 mm socket.

KPS1/B2:
Fine hook clip. The fine wire connecting hook grasps IC legs, plug pins and bare wire connections, and presses them against the insulating head under spring pressure. The low weight of the clips places hardly any load even on critical contacts.
ø 2 mm rigid socket in handle for accepting ø 2 mm spring-loaded plugs.

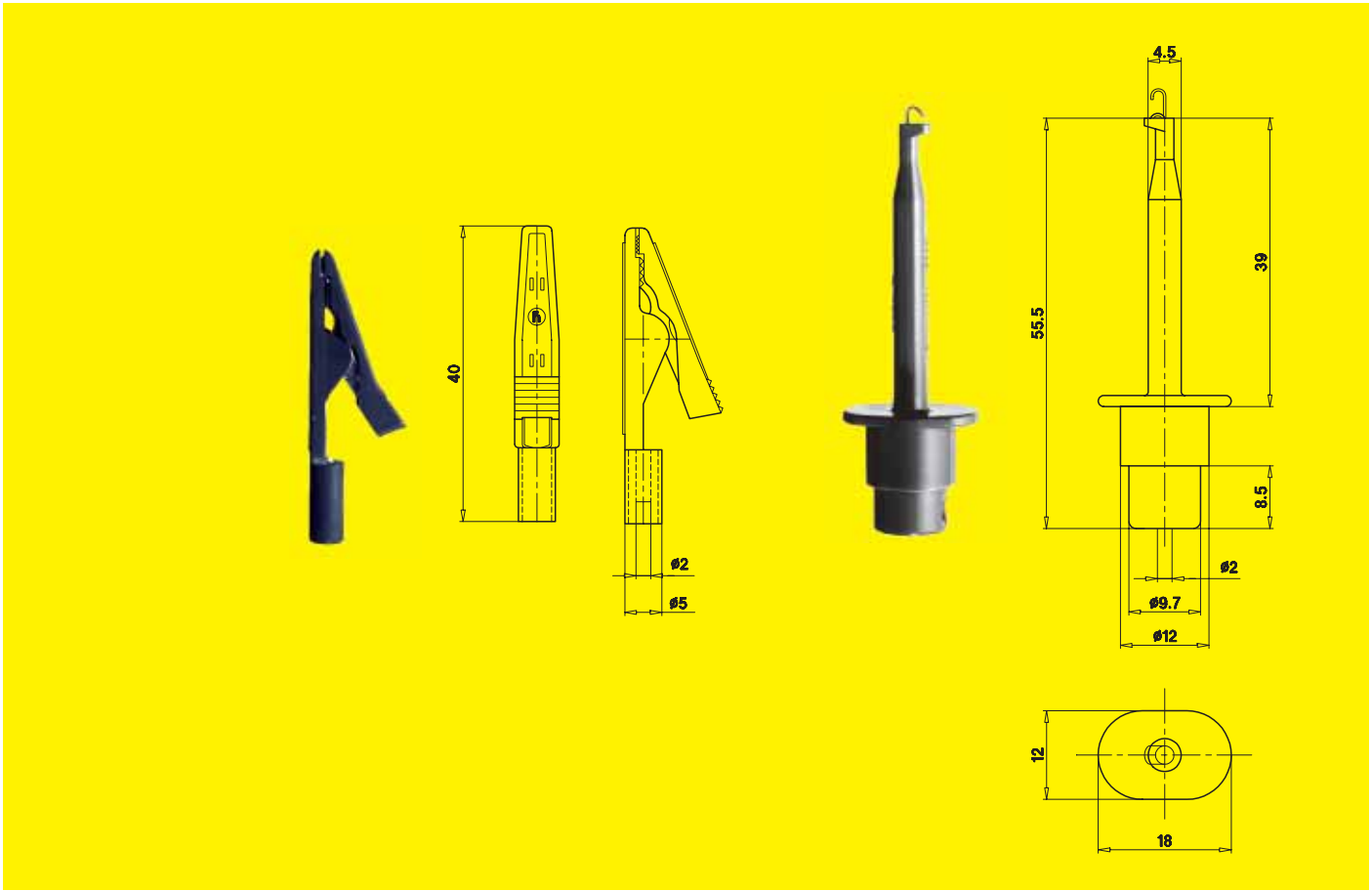

Type	AGK40	KPS1/B2
Insulation	PE	PA
Operating temperature	-25°C ... +80°C	-25°C ... +70°C
Clip	fine-wire gripping surface, brass, tin-plated	hook clip
Clamping limit	3 mm	2 mm
Terminal	ø 2 mm rigid socket	ø 2 mm rigid socket
Standard colours*	21 - 22	21 - 25, 29
Order No.	**24.0154-***	**24.0139-***

*Colour code	**20** green-yellow	**21** black	**22** red	**23** blue	**24** yellow	**25** green	**26** violet	**27** brown	**28** grey	**29** white	**30** orange	**33** transparent

Uninsulated ø 2 mm rigid sockets for accepting spring-loaded ø 2 mm plugs.
The sockets are pressed or soldered into predrilled panels.

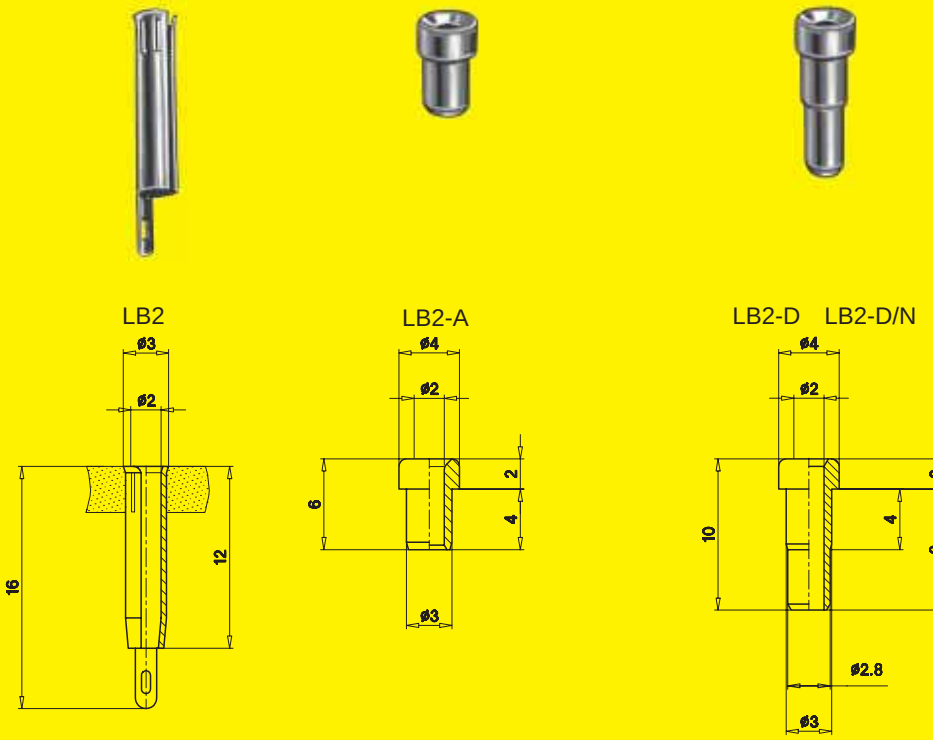

Type	LB2	LB2-A	LB2-D	LB2-D/N
Rated current	10 A	10 A	10 A	10 A
Metal part, plating	rolled brass sheet, gold-plated	machined brass, gold-plated	machined brass, gold-plated	machined brass, nickel-plated
Terminal	solder connection	–	–	–
Drill hole	ø 2.4 - 2.45 mm	ø 3 mm	ø 3 mm	ø 3 mm
	-Ⓐ-	-Ⓐ-	-Ⓐ-	-Ⓐ- ☺
Order No.	**23.1001**	**23.1000**	**49.7512**	**49.7511**

Assembly tool	**MB2, Order No. 25.0031**

*Colour code	**20**	**21**	**22**	**23**	**24**	**25**	**26**	**27**	**28**	**29**	**30**	**33**
	green-yellow	black	red	blue	yellow	green	violet	brown	grey	white	orange	transparent

ø 2 mm rigid sockets for accepting spring-loaded ø 2 mm plugs, insulated or uninsulated versions available.
The sockets are pressed or soldered into predrilled panels.



B-2N B-2G

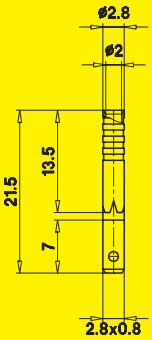



EPB-2N EPB-2G

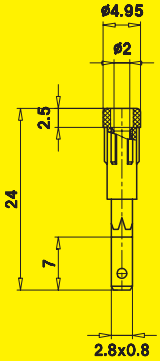

Type	B-2N	B-2G	EPB-2N	EPB-2G
Rated current	10 A	10 A	10 A	10 A
Insulation	–	–	PA	PA
Operating temperature	–	–	-40°C ... +80°C	-40°C ... +80°C
Metal part, plating	rolled brass sheet, nickel-plated	rolled brass sheet, gold-plated	rolled brass sheet, nickel-plated	rolled brass sheet, gold-plated
Terminal	flat connecting tab 2,8 mm x 0,8 mm			
Drill hole	ø 2.7 mm	ø 2.7 mm	ø 3.9 mm	ø 3.9 mm
				
Standard colours*	–	–	21 - 27, 29	21 - 27, 29
Order No.	**63.9282**	**63.9283**	**63.9286-***	**63.9287-***

Assembly tool	**MB2, Order No. 25.0031**
Connection aids	flat connecting receptacle (Au) **FSH2,8x0,8, Order No. 23.5200**

*Colour code	**20**	**21**	**22**	**23**	**24**	**25**	**26**	**27**	**28**	**29**	**30**	**33**
	green-yellow	black	red	blue	yellow	green	violet	brown	grey	white	orange	transparent

Insulated ø 2 mm sockets for accepting ø 2 mm plugs. The sockets are pressed into predrilled panels of plastic, metal etc. and are available with different terminals. Delivered in parts.

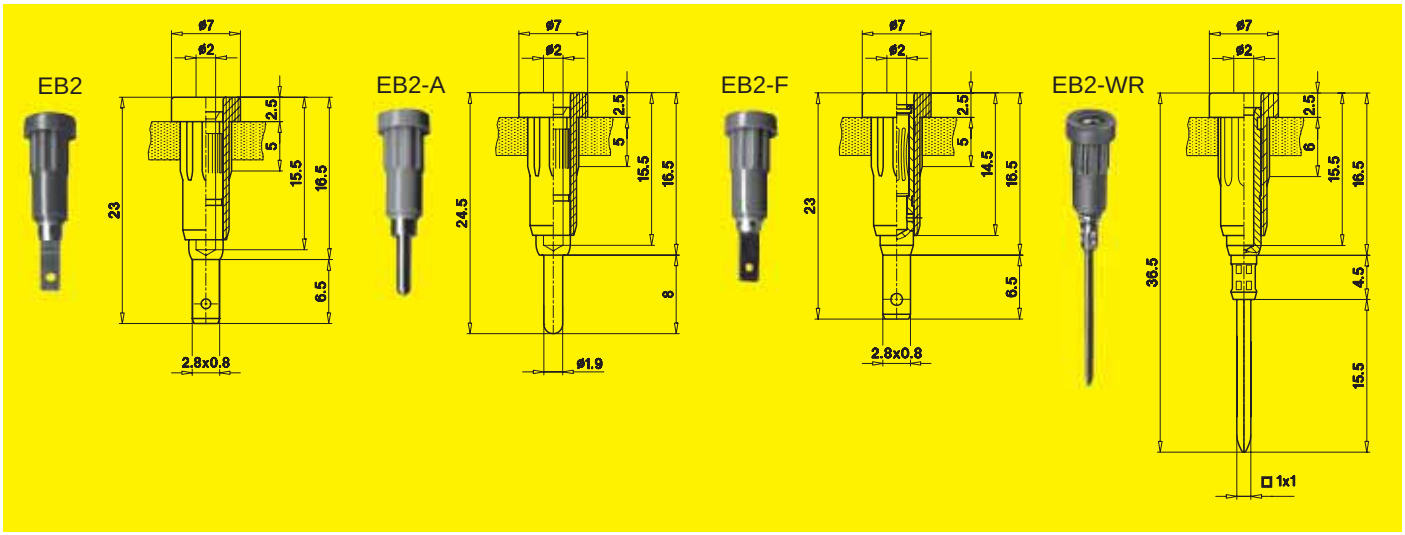

Type	EB2	EB2-A	EB2-F	EB2-WR
Rated current	10 A	10 A	10 A	10 A
Contact resistance	–	–	0,5 mΩ	–
Insulation	PA	PA	PA	PA
Operating temperature	-40°C ... +80°C	-40°C ... +80°C	-40°C ... +80°C	-40°C ... +80°C
Socket design	rigid	rigid	spring-loaded	rigid
Metal part, plating	machined brass, gold-plated	machined brass, gold-plated	machined brass, Optalloy finish	brass, nickel-plated
Terminal	flat connecting tab 2.8 mm x 0.8 mm	round connecting pin ø 1.9 mm	flat connecting tab 2.8 mm x 0.8 mm	Wire-wrap 1 mm x 1 mm
Drill hole	ø 4.9 mm	ø 4.9 mm	ø 4.9 mm	ø 4.9 mm
	-Ⓐ-	-Ⓐ-	-Ⓐ-	-Ⓐ-
Standard colours*	20 - 29	20 - 29	20 - 29	20 - 29
Order No.	**23.1011-***	**23.1012-***	**23.1021-***	**23.1022-***

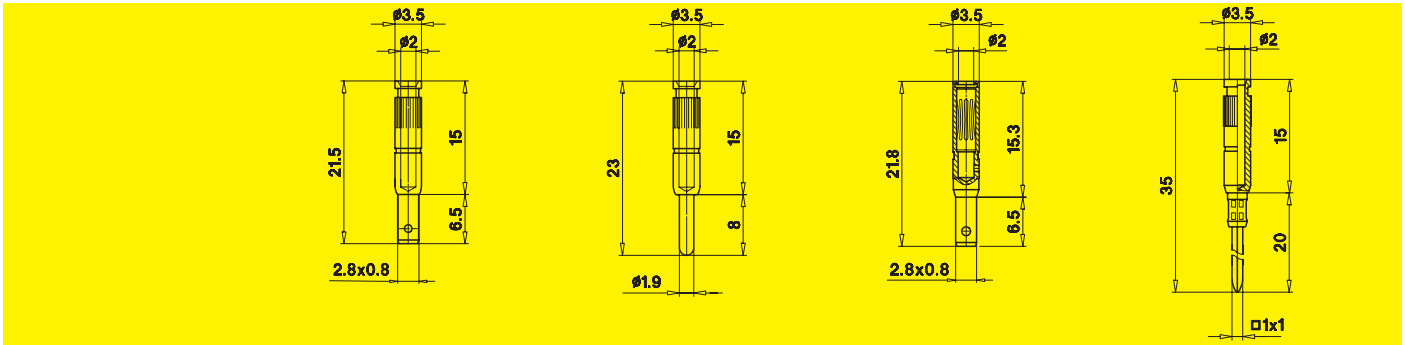

Insulation	**I-EB2, Order No. 23.5011-***			
Socket	**B-EB2 Order No. 23.5010**	**B-EB2-A Order No. 23.5002**	**B-EB2-F Order No. 23.5005**	**B-EB2-WR Order No. 23.5061**
Assembly tool	**MB2, Order No. 25.0031**			
Drill	**HSS4,9, Order No. 25.0041**			
Connection aids	flat connecting receptacle (Au) **FSH2,8x0,8 Order No. 23.5200**	round connecting receptacle (Au) **RSH1,9 Order No. 23.5202**	flat connecting receptacle (Au) **FSH2,8x0,8 Order No. 23.5200**	–
Assembly instructions on request !	MA 102			

*Colour code	**20**	**21**	**22**	**23**	**24**	**25**	**26**	**27**	**28**	**29**	**30**	**33**
	green-yellow	black	red	blue	yellow	green	violet	brown	grey	white	orange	transparent

Insulated and uninsulated ø 2 mm sockets for accepting ø 2 mm plugs. The sockets can be screw-mounted in predrilled panels of plastic, metal etc. The sockets are available with different terminals.

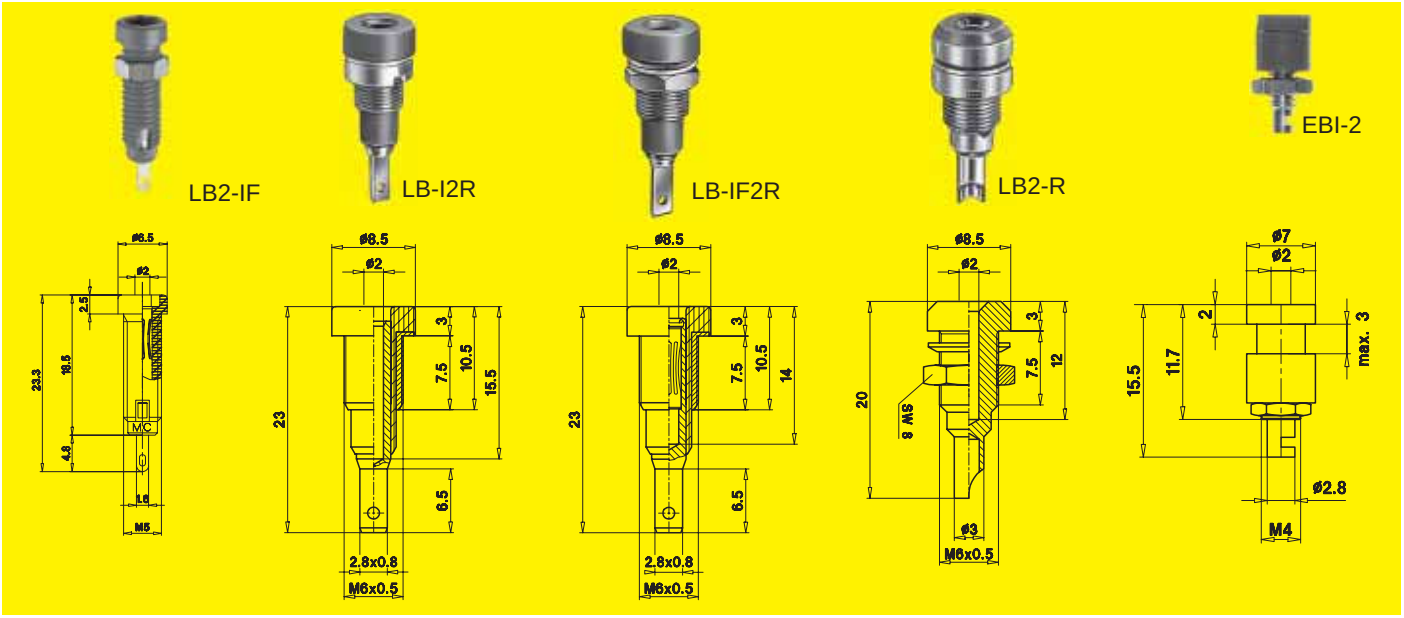

Type	LB2-IF	LB-I2R	LB-IF2R	LB2-R	EBI-2
Description	insulated ø 2 mm panel-mount socket (spring-loaded with Multilam)	insulated ø 2 mm panel-mount socket (rigid) with metal thread jacket for mounting	insulated ø 2 mm panel-mount socket (spring-loaded) with metal thread jacket for mounting	uninsulated ø 2 mm earth socket(rigid)	insulated ø 2 mm panel-mount socket (rigid)
Rated current	10 A	10 A	10 A	15 A	6 A
Contact resistance	3 mΩ	–	0.8 mΩ	–	–
Insulation	PA	PA	PA	–	PA
Operating temperature	-40°C ... +80°C	-40°C ... +80°C	-40°C ... +80°C	–	-40°C ... +80°C
Metal part socket / plating	gold-plated	machined brass, Optalloy finish	machined brass, Optalloy finish, with Multilam, nickel-plated	machined brass, nickel-plated	machined brass
Terminal	solder connection	flat connecting tab 2.8 mm x 0.8 mm	flat connecting tab 2.8 mm x 0.8 mm	soldering hole	solder connection
Drill hole	ø 5.3 mm	ø 6.4 mm	ø 6.4 mm	ø 6.4 mm	ø 5.2 mm
	Ⓐ	Ⓐ	Ⓐ	Ⓐ	Ⓐ
Standard colours*	21 - 25	20 - 29	20 - 29	–	21 - 25, 29
	Order No.	**Order No.**	**Order No.**	**Order No.**	**Order No.**
with round nut:	–	**23.0040-***	**23.0020-***	**23.0000**	–
with hexagon nut:	**23.0050-***	**23.0030-***	**23.0060-***	**23.0010**	**69.9233-***

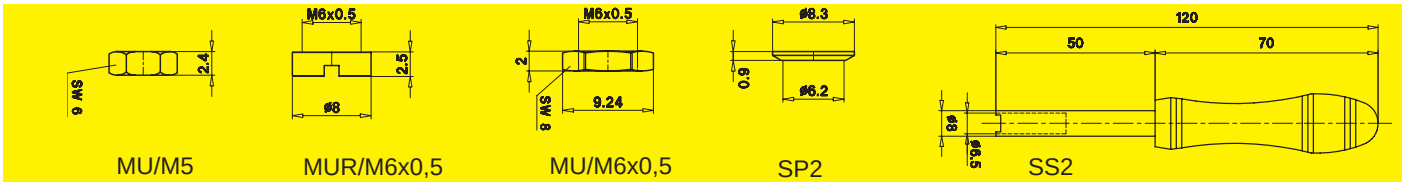

MU/M5 | MUR/M6x0,5 | MU/M6x0,5 | SP2 | SS2

Socket without nut	**BI-LB2-IF Order No. 23.5062-***	**BI-LB-I2R Order No. 23.5059-***	**BI-LB-IF2R Order No. 23.5021-***	**B-LB2-R Order No. 23.5058**	Not available as separate parts !
Assembly material: round nut	–	**MUR/M6x0,5, Order No. 23.5100**			
hexagon nut	**MU/M5, 23.5103**	**MU/M6x0,5, Order No. 23.5104**			
U-washer	–	**SP2, Order No. 23.5105**			
Special assembly tools	–	**SS2, Order No. 25.0022** (suitable for round nuts)			
Connection aids	–	flat connecting receptacle (Au) **FSH2,8x0,8, Order No. 23.5200**		–	

*Colour code	**20**	**21**	**22**	**23**	**24**	**25**	**26**	**27**	**28**	**29**	**30**	**33**
	green-yellow	black	red	blue	yellow	green	violet	brown	grey	white	orange	transparent

ø 2 mm rigid sockets for accepting ø 2 mm plugs for various special applications.

The sockets can be screw-mounted in predrilled panels of plastic, metal etc.

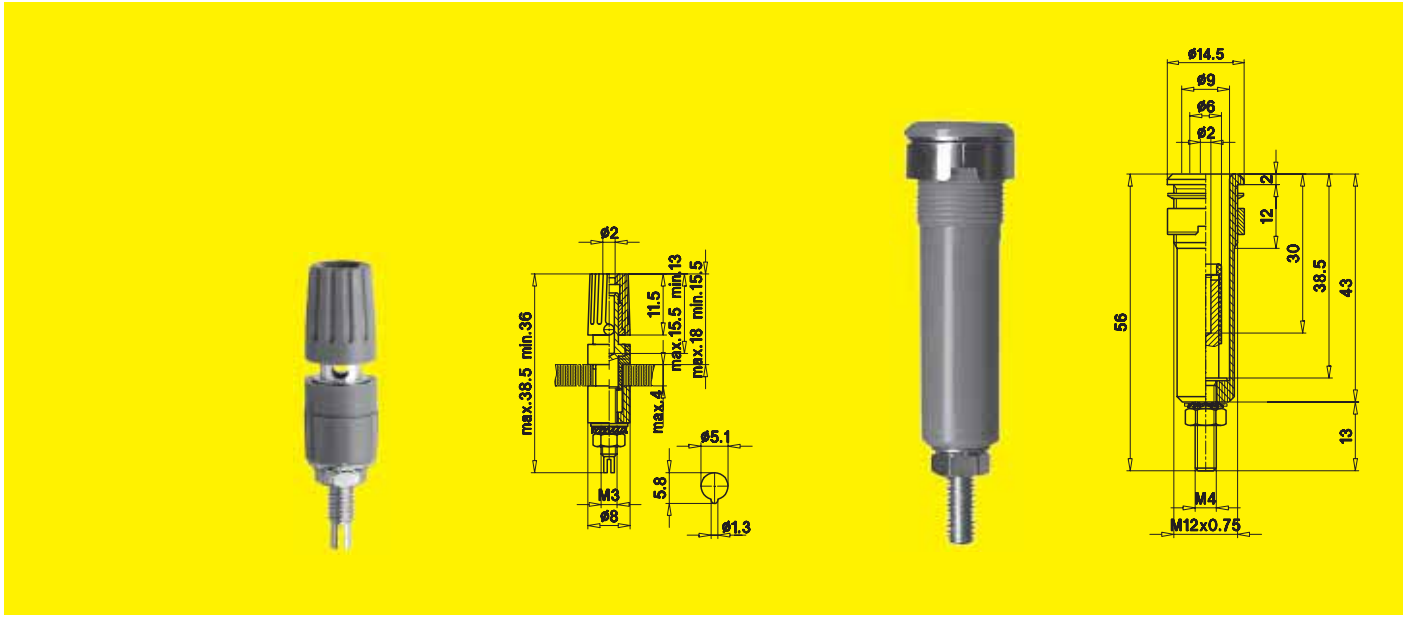

Type	PK2-T	HLB2-G
Description	binding post with covered ø 2 mm socket, insulated head undetachable, limited opening	high voltage socket, suitable for high voltage lead HLK218-L, see page 37
Rated voltage	–	1500 V, CAT I (secondary voltage)
Rated current	15 A	15 A
Insulation	PA	PA
Operating temperature	-40°C ... +80°C	-40°C ... +80°C
Metal part socket, plating	machined brass, nickel-plated	machined brass, gold-plated
Terminal	threaded bolt M3 and ø 2 mm cross hole	threaded bolt M4
Drill hole	binding post insulation with anti-rotation lug, see sketch	ø $12.2^{+0.1}$ mm
	Ⓐ	Ⓐ
Standard colours*	21 - 22	21 - 23
Order No.	**23.0290-***	**23.0230-***

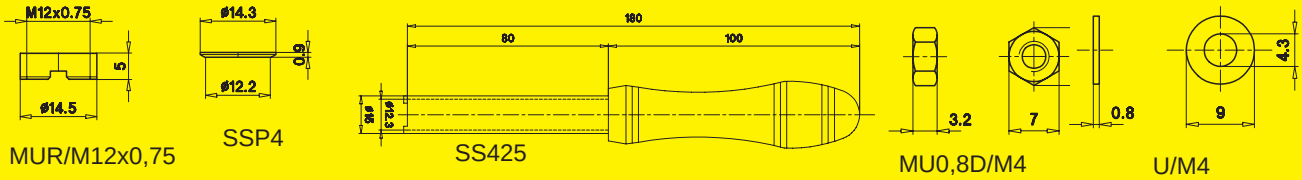

Assembly material	Not available as separate parts !	round nut **MUR/M12x0,75, Order No. 23.5120** and **U-washer SSP4, Order No. 23.5108** are supplied
Tools		special assembly tool for round nut **SS425, Order No. 25.0020**
Connection aids		hexagon nut M4, **MU0,8D/M4, Order No. 22.6509**, and 2 U-washers, **U/M4, Order No. 22.6511** are supplied

*Colour code	**20**	**21**	**22**	**23**	**24**	**25**	**26**	**27**	**28**	**29**	**30**	**33**
	green-yellow	black	red	blue	yellow	green	violet	brown	grey	white	orange	transparent

The ø 2 mm socket and plug modules are made for slide-in rack systems. Up to 10 modules can be joined together (socket and plug modules can be mixed).

The floating sockets and plugs are mounted in the insulation by means of a threaded screw. The live parts are touch-protected in the unplugged condition.

P1/30...

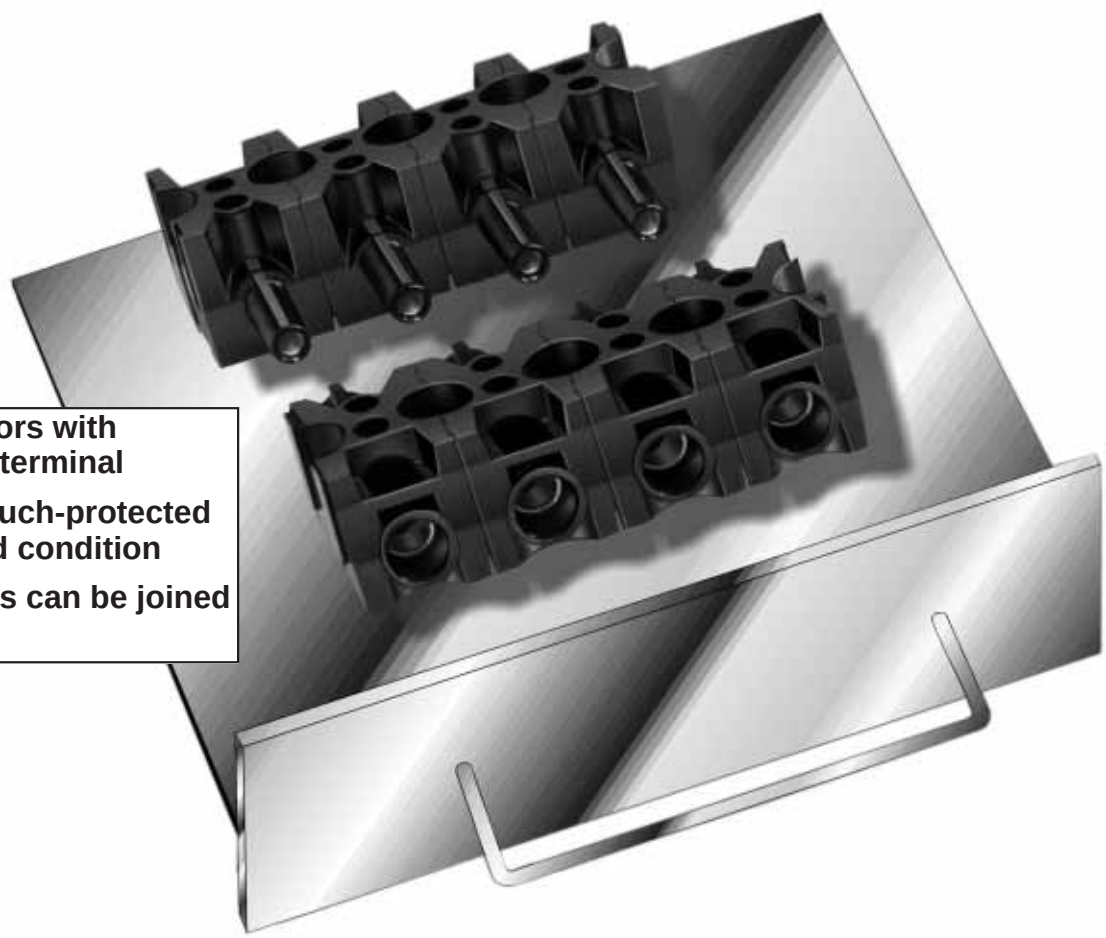

ø 2 mm connectors with screw clamping terminal

Live parts are touch-protected in the unplugged condition

Up to 10 modules can be joined together

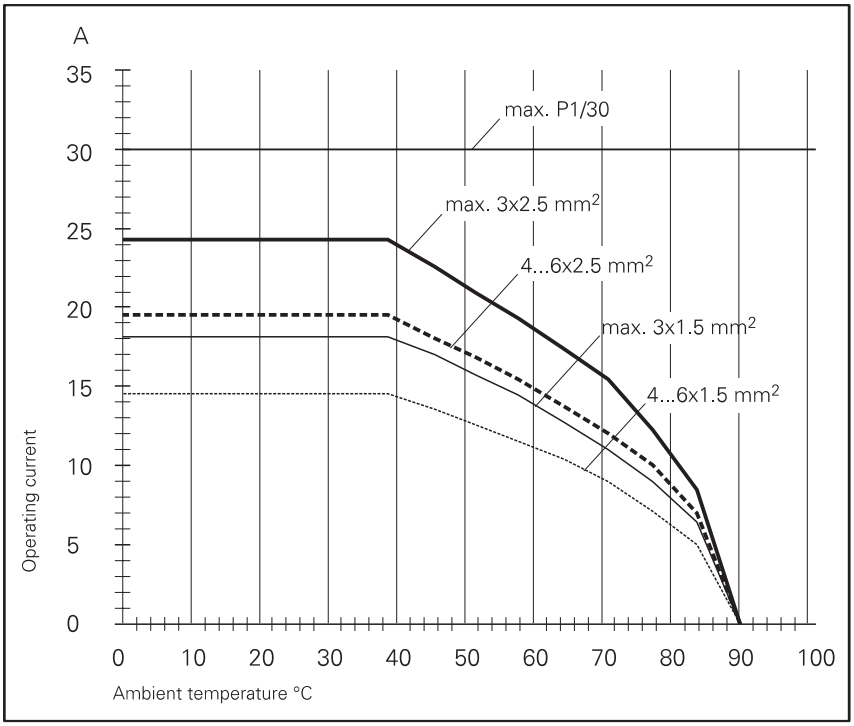

Derating Diagram for up to 6 current carrying conductors (bundled) according to DIN VDE 0298 part 4 for 1.5 mm^2 and 2.5 mm^2 Cu wire, PVC insulated for higher temperatures (90°C).

*Colour code	**20** green-yellow	**21** black	**22** red	**23** blue	**24** yellow	**25** green	**26** violet	**27** brown	**28** grey	**29** white	**30** orange	**33** transparent



P1/30-SSK
P1/30-SSL



P1/30-BS

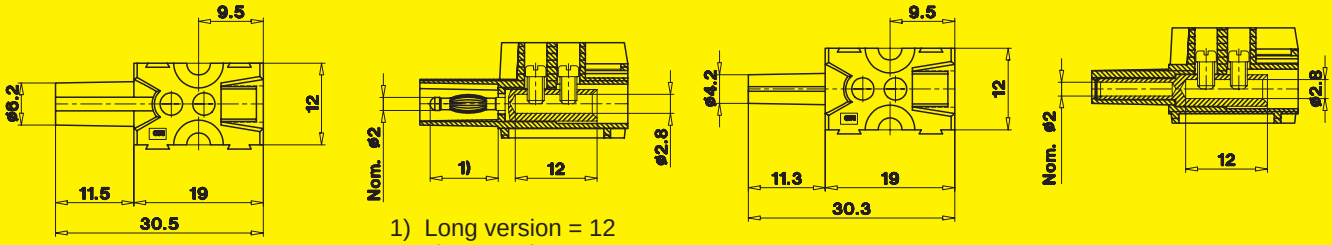

1) Long version = 12
Short version = 10

Type	P1/30-SSK	P1/30-SSL	P1/30-BS
Design	ø 2 mm Multilam plug (length 10 mm)	ø 2 mm Multilam plug (length 12 mm)	ø 2 mm rigid socket
Rated voltage	500 V, CAT II	500 V, CAT II	500 V, CAT II
Rated current	30 A	30 A	30 A
Short circuit current	1 s: 295 A 3 s: 170 A	1 s: 295 A 3 s: 170 A	1 s: 295 A 3 s: 170 A
Contact resistance	0.5 mΩ	0.5 mΩ	–
Insulation	PC-GF	PC-GF	PC-GF
Operating temperature	-40°C ... +125°C	-40°C ... +125°C	-40°C ... +125°C
Metal parts, plating	brass, silver-plated with Multilam, gold-plated	brass, silver-plated with Multilam, gold-plated	brass, silver-plated
Screw terminal conductor size	max. 2.5 mm^2	max. 2.5 mm^2	max. 2.5 mm^2
Insertion and withdrawal force	~ 4 N	~ 4 N	~ 4 N
	The stated figures for the insertion and withdrawal force refer to forces after 20 - 30 connections with a thin lubricating film**. Forces are greater in the new condition.		
Tightening torque	0.2 Nm	0.2 Nm	0.2 Nm
Weight	4.0 g	4.2 g	4.1 g
Standard colours*	black	black	black
Order No.	**15.0186-21**	**15.0187-21**	**15.0188-21**

** We recommend lubricants from Klüber Lubrication in Munich: Sythesin PDL250/01, Order No. 73.1050

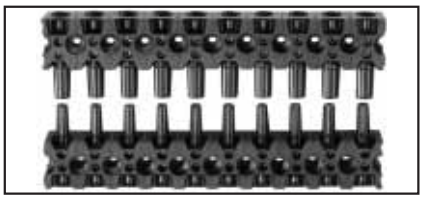

Up to 10 modules can be joined together.

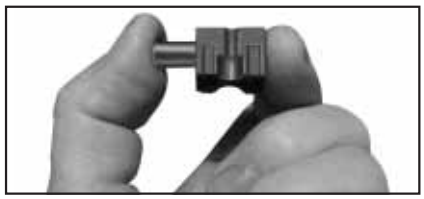

Touch-protected in the unplugged condition, not valid for the longer plug.



Marking facility, e.g. with Dekafix 5 from Weidmüller



Screw clamping terminal.



Long version of plug for leading contactS.

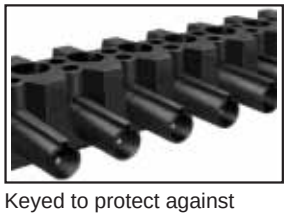

Keyed to protect against wrong insertion.

*Colour code	20	21	22	23	24	25	26	27	28	29	30	33
	green-yellow	black	red	blue	yellow	green	violet	brown	grey	white	orange	transparent

25 A pluggable connector for Halogen low voltage lighting systems and model building kits. Small, compact, space-saving, reliable, interlocking plugging. Available with screw or solder connection. Delivered in parts.



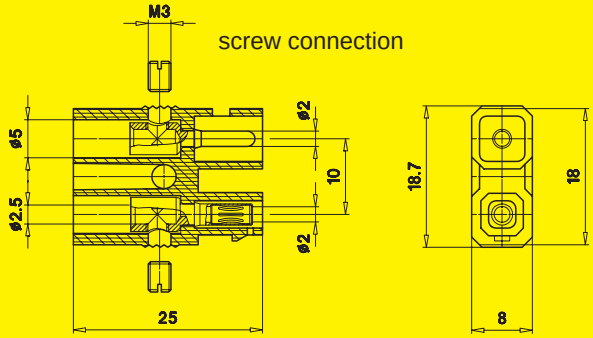

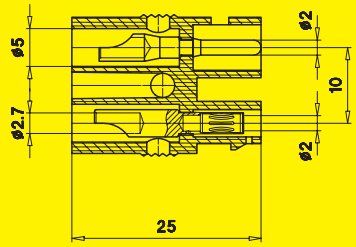

Type	CH225-M3	CH225-L
Rated current	25 A	25 A
Contact resistance	0.5 mΩ	0.5 mΩ
Insulation	PA	PA
Operating temperature	-10°C ... +80°C	-10°C ... +80°C
Nominal diameter plug / socket	ø 2 mm	ø 2 mm
Withdrawal force	~ 8 N	~ 8 N
Metal part, plating	brass, gold-plated	brass, gold-plated
Terminal	screw connection	solder connection
Max. lead cross section	0.5 mm^2 - 1.5 mm^2	0.5 mm^2 - 2.5 mm^2
Weight	4 g	4 g
Standard colours*	black	black
Order No.	**50.0262-21**	**50.0263-21**

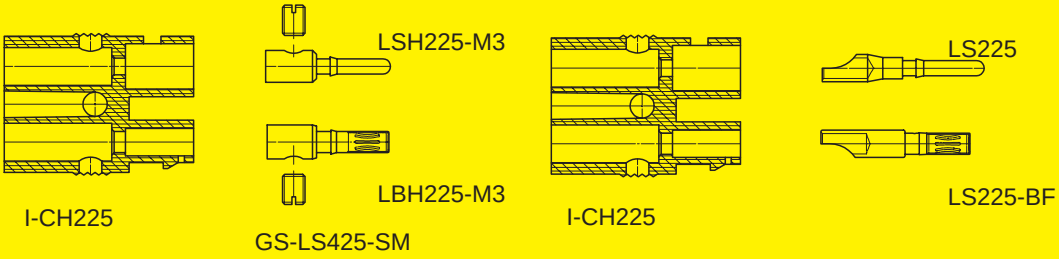

Insulation, black	**I-CH225, Order No. 50.1115-21**	
Plug	**LSH225-M3, Order No. 49.2028**	**LS225, Order No. 22.1023**
Socket	**LBH225-M3, Order No. 49.7507**	**LS225-BF, Order No. 22.1031**
Assembly material	2 screws **GS-LS425-SM, Order No. 22.6122** are supplied !	–



Example of an application with the 2 pole plug-socket connector CH225-... in model building kits

*Colour code	**20**	**21**	**22**	**23**	**24**	**25**	**26**	**27**	**28**	**29**	**30**	**33**
	green-yellow	black	red	blue	yellow	green	violet	brown	grey	white	orange	transparent



ø 4 mm connectors for voltages up to max. 30 V_{AC} / 60 V_{DC}

Connecting Leads
ø 4 mm

Pages 60 - 73

Test Probes
ø 4 mm

Page 86

Connecting Plugs
ø 4 mm

Pages 96 - 100

Plugs and Sockets
ø 4 mm

Pages 74 - 75

Clips
ø 4 mm

Pages 87 - 88

Press-in and Panel-mount Sockets
ø 4 mm

Pages 101 - 108

Multilam Plugs
ø 4 mm

Pages 76 - 85

Adapters and Adapter Leads
for special connections
ø 4 mm

Pages 89 - 95

Binding Posts
ø 4 mm

Pages 109 - 111

For a wide range of components for voltages up to a maximum of 1000 V – in particular test leads, probes and contact clips that can be held in the hand when used for their designed purpose – see our **catalogue Lab Si** ! These safety test accessories are touch-protected and comply with the requirements of IEC/EN 61010-2-031.

*Colour code	**20** green-yellow	**21** black	**22** red	**23** blue	**24** yellow	**25** green	**26** violet	**27** brown	**28** grey	**29** white	**30** orange	**33** transparent

Highly flexible connecting leads with moulded ø 4 mm stackable Multilam plugs on both ends.

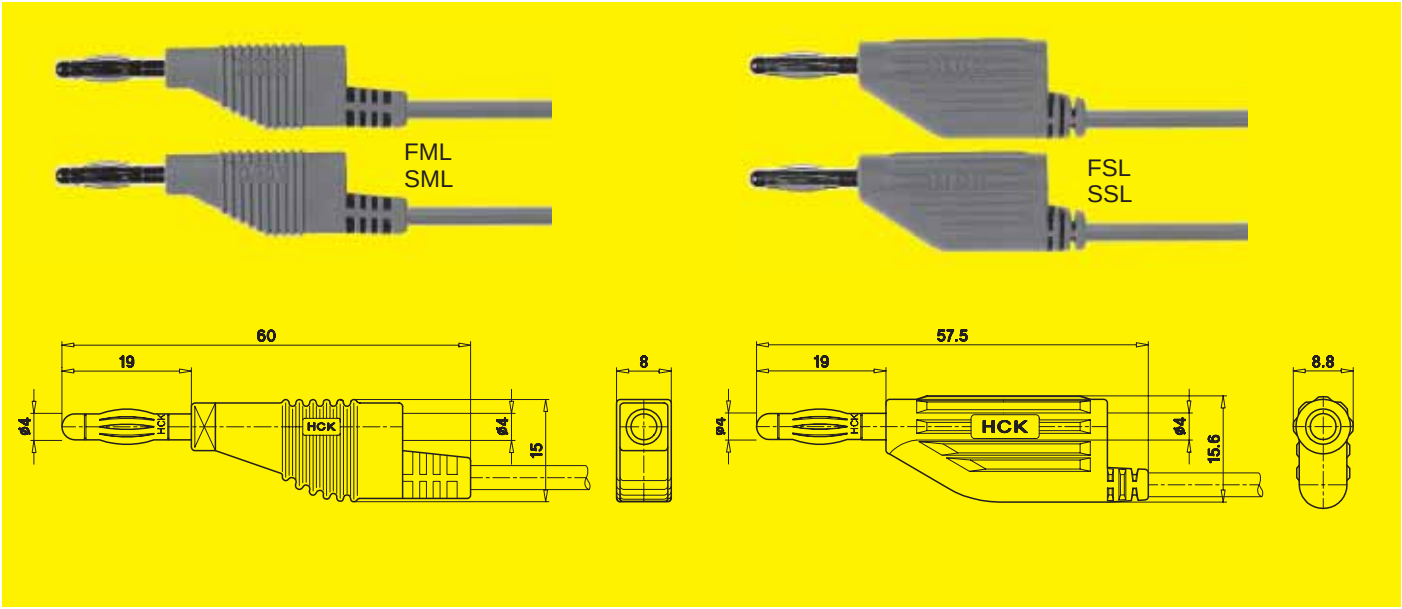

Type	FML	SML	FSL	SSL
Rated current	15 A	15 A	30 A	30 A
Contact resistance	0.8 mΩ	0.8 mΩ	0.8 mΩ	0.8 mΩ
Lead cross section	0.75 mm²	0.75 mm²	2.0 mm²	2.0 mm²
Lead insulation	PVC	Silicone	PVC	Silicone
Lead operating temperature	-10°C ... +70°C	-80°C ... +150°C	-10°C ... +70°C	-80°C ... +150°C
Insulation	TPE	TPE	TPE	TPE
Insulation operating temperature	-40°C ... +80°C	-40°C ... +80°C	-40°C ... +80°C	-40°C ... +80°C
Metal part, plating	brass, nickel-plated	brass, nickel-plated	brass, nickel-plated	brass, nickel-plated
Standard colours*	21 - 26	21 - 26	21 - 25	21 - 25
Standard lengths:	**Order No.**	**Order No.**	**Order No.**	**Order No.**
25 cm	**64.7289-025***	**64.7288-025***	**64.7290-025***	**64.7291-025***
50 cm	**64.7289-050***	**64.7288-050***	**64.7290-050***	**64.7291-050***
100 cm	**64.7289-100***	**64.7288-100***	**64.7290-100***	**64.7291-100***
150 cm	**64.7289-150***	**64.7288-150***	**64.7290-150***	**64.7291-150***
200 cm	**64.7289-200***	**64.7288-200***	**64.7290-200***	**64.7291-200***

	Not available as separate parts !

*Colour code	**20**	**21**	**22**	**23**	**24**	**25**	**26**	**27**	**28**	**29**	**30**	**33**
	green-yellow	black	red	blue	yellow	green	violet	brown	grey	white	orange	transparent

Highly flexible connecting leads with ø 4 mm stackable Multilam plugs on both ends.



LK410 LK410/SIL LK415

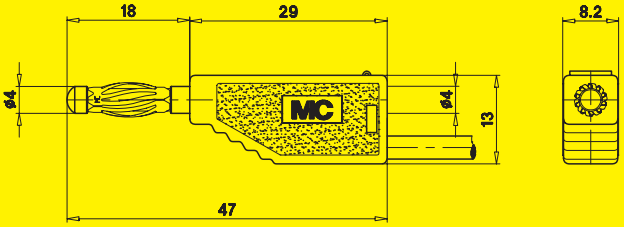



LK410-X

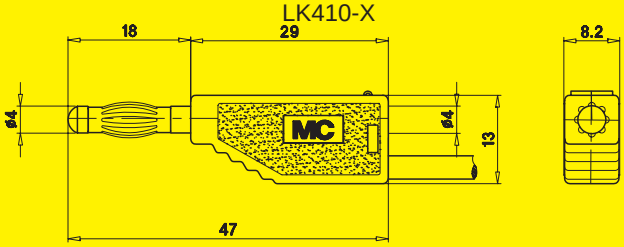

Type	LK410	LK410/SIL	LK415	LK410-X
Rated current	19 A	19 A	24 A	19 A
Contact resistance	0.2 mΩ	0.2 mΩ	0.2 mΩ	0.8 mΩ
Multilam version	twisted	twisted	twisted	straight
Lead cross section	1.0 mm²	1.0 mm²	1.5 mm²	1.0 mm²
Lead insulation	PVC	Silicone	PVC	PVC
Lead operating temperature	-10°C ... +70°C	-80°C ... +150°C	-10°C ... +70°C	-10°C ... +70°C
Insulation	PA	PA	PA	PA
Insulation operating temperature	-40°C ... +80°C	-40°C ... +80°C	-40°C ... +80°C	-40°C ... +80°C
Metal part, plating	brass, gold-plated	brass, gold-plated	brass, gold-plated	brass, nickel-plated
Standard colours*	20 - 29	21 - 26	20 - 29	20 - 27, 29
Standard lengths:	**Order No.**	**Order No.**	**Order No.**	**Order No.**
25 cm	**28.0060-025***	**28.0061-025***	**28.0068-025***	**28.0116-025***
50 cm	**28.0060-050***	**28.0061-050***	**28.0068-050***	**28.0116-050***
75 cm	**28.0060-075***	**28.0061-075***	**28.0068-075***	**28.0116-075***
100 cm	**28.0060-100***	**28.0061-100***	**28.0068-100***	**28.0116-100***
150 cm	**28.0060-150***	**28.0061-150***	**28.0068-150***	**28.0116-150***
200 cm	**28.0060-200***	**28.0061-200***	**28.0068-200***	**28.0116-200***

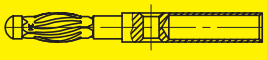

LS410

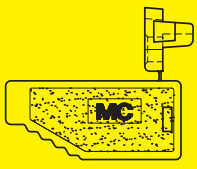

KT410 KT415

Insulator	**KT410 Order No. 22.2140-***	**KT410 Order No. 22.2140-***	**KT415 Order No. 22.2150-***	Not available as separate parts !
Multilam plug	**LS410 Order No. 22.1010**	**LS410 Order No. 22.1010**	**LS410 Order No. 22.1010**	
Multistrand wires, see pages 124 - 126.	**FLEXI-E/HK 1,0 (PVC) Order No. 60.7009-***	**SILI-E 1,0 (Silicone) Order No. 61.7554-***	**FLEXI-E 1,5 (PVC) Order No. 60.7010-***	
Assembly instructions on request !	MA 110			

*Colour code	**20** green-yellow	**21** black	**22** red	**23** blue	**24** yellow	**25** green	**26** violet	**27** brown	**28** grey	**29** white	**30** orange	**33** transparent

Highly flexible connecting leads with ø 4 mm stackable Multilam plugs on both ends.



LK425-A LK425-A/SIL LK425-A/T



LK425-A/X

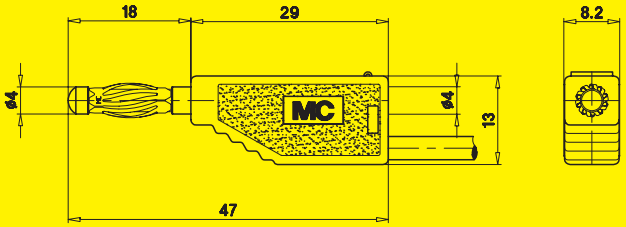

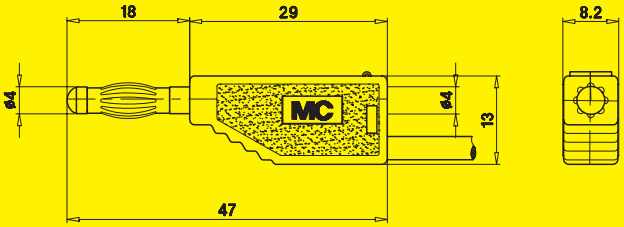

Type	LK425-A	LK425-A/SIL	LK425-A/TF	LK425-A/X
Rated current	32 A	32 A	32 A	32 A
Contact resistance	0.2 mΩ	0.2 mΩ	0.2 mΩ	0.8 mΩ
Multilam version	twisted	twisted	twisted	straight
Lead cross section	2.5 mm²	2.5 mm²	2.5 mm²	2.5 mm²
Lead insulation	PVC	Silicone	TPE, interlaced	PVC
Lead operating temperature	-10°C ... +70°C	-80°C ... +150°C	-30°C ... +90°C	-10°C ... +70°C
Insulation	PA	PA	PA	PA
Insulation operating temperature	-40°C ... +80°C	-40°C ... +80°C	-40°C ... +80°C	-40°C ... +80°C
Metal part, plating	brass, gold-plated	brass, gold-plated	brass, gold-plated	brass, nickel-plated
				
Standard colours*	20 - 29	21 - 25	21 - 26	20 - 29
Standard lengths:	**Order No.**	**Order No.**	**Order No.**	**Order No.**
25 cm	**28.0073-025***	**28.0074-025***	**28.0075-025***	**28.0119-025***
50 cm	**28.0073-050***	**28.0074-050***	**28.0075-050***	**28.0119-050***
75 cm	**28.0073-075***	**28.0074-075***	**28.0075-075***	**28.0119-075***
100 cm	**28.0073-100***	**28.0074-100***	**28.0075-100***	**28.0119-100***
150 cm	**28.0073-150***	**28.0074-150***	**28.0075-150***	**28.0119-150***
200 cm	**28.0073-200***	**28.0074-200***	**28.0075-200***	**28.0119-200***

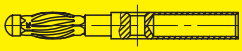

LS410

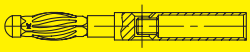

LS425-AM

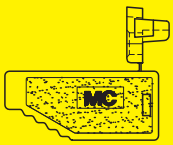

KT425-A

Insulator	**KT425-A, Order No. 22.2160-***			Not available as separate parts !
Multilam plug	**LS410, Order No. 22.1010** **LS425-AM, Order No. 22.1028** (screw type connection)			
Multistrand wires, see pages 124 - 126.	**FLEXI-E 2,5 (PVC) Order No. 60.7012-***	**SILI-E 2,5 (Silicone) Order No. 61.7556-***	**HK2,5-D/TF (TPE, interlaced) Order No. 22.0180-***	
Assembly instructions on request !	MA 110			

*Colour code	**20**	**21**	**22**	**23**	**24**	**25**	**26**	**27**	**28**	**29**	**30**	**33**
	green-yellow	black	red	blue	yellow	green	violet	brown	grey	white	orange	transparent

Highly flexible low thermal e. m. f. connecting leads with ø 4 mm stackable Multilam plugs on both ends for calibration measurements.
Note: always use shortest possible wire lengths !

Numerical example:
The thermal e.m.f. of a connection between a ø 4 mm laboratory plug LS410-TS and a ø 4 mm binding post PK4-TS (Order No. 23.0350) is less than 0.01 µV / °C.



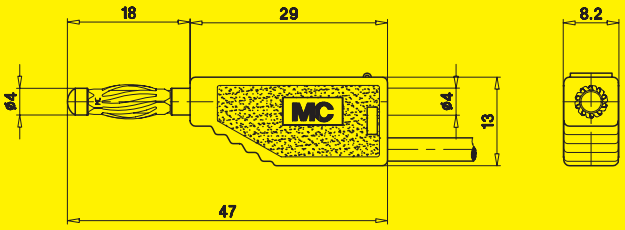

Type	LK410-TS	LK425-A/TS
Rated current	19 A	32 A
Contact resistance	0.2 mΩ	0.2 mΩ
Lead cross section	1.0 mm²	2.5 mm²
Lead insulation	TPE	TPE
Lead operating temperature	-30°C ... +110°C	-30°C ... +110°C
Insulation	PA	PA
Insulation operating temperature	-40°C ... +80°C	-40°C ... +80°C
Metal parts, plating	copper / tellurium, gold-plated (1 µm) without interlayer	
	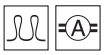	
Standard colours*	21 - 22	21 - 22
Standard lengths:	**Order No.**	**Order No.**
25 cm	**28.0067-025***	**28.0076-025***
50 cm	**28.0067-050***	**28.0076-050***
75 cm	**28.0067-075***	**28.0076-075***
100 cm	**28.0067-100***	**28.0076-100***
150 cm	**28.0067-150***	**28.0076-150***
200 cm	**28.0067-200***	**28.0076-200***

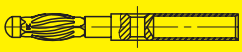

LS410-TS
LS425-A/TS



KT-TS1
KT-TS2,5

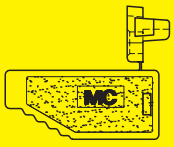

KT410
KT425-A

Insulator	**KT410, Order No. 22.2140-***	**KT425-A, Order No. 22.2160**
Mark "TS" (black on yellow)	**KT-TS1, Order No. 22.7100**	**KT-TS2,5, Order No. 22.7110**
Multilam plug	**LS410-TS, Order No. 22.1013**	**LS425-A/TS, Order No. 22.1018**
Multistrand wires, see pages 124 - 126.	**PLAST-E 1,0 (TPE) Order No. 60.7190-***	**PLAST-E 2,5 (TPE) Order No. 60.7200-***
Assembly instructions on request !	MA 120	

*Colour code	**20**	**21**	**22**	**23**	**24**	**25**	**26**	**27**	**28**	**29**	**30**	**33**
	green-yellow	black	red	blue	yellow	green	violet	brown	grey	white	orange	transparent

Highly flexible connecting leads with ø 4 mm stackable Multilam plugs on both ends. With 90° wire outlet.



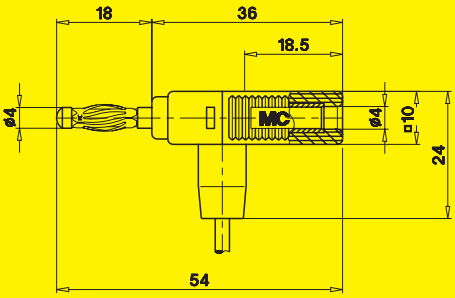

Type	LK410-D90	LK410-D90/SIL	LK425-D90	LK425-D90/SIL
Rated current	19 A	19 A	32 A	32 A
Contact resistance	0.2 mΩ	0.2 mΩ	0.2 mΩ	0.2 mΩ
Lead cross section	1.0 mm²	1.0 mm²	2.5 mm²	2.5 mm²
Lead insulation	PVC	Silicone	PVC	Silicone
Lead operating temperature	-10°C ... +70°C	-80°C ... +150°C	-10°C ... +70°C	-80°C ... +150°C
Insulation	PA	PA	PA	PA
Insulation operating temperature	-40°C ... +80°C	-40°C ... +80°C	-40°C ... +80°C	-40°C ... +80°C
Metal part, plating	brass, gold-plated	brass, gold-plated	brass, gold-plated	brass, gold-plated
Standard colours*	20 - 29	21 - 25	20 - 29	21 - 25
Standard lengths:	**Order No.**	**Order No.**	**Order No.**	**Order No.**
25 cm	**28.0016-025***	**28.0064-025***	**28.0017-025***	**28.0078-025***
50 cm	**28.0016-050***	**28.0064-050***	**28.0017-050***	**28.0078-050***
75 cm	**28.0016-075***	**28.0064-075***	**28.0017-075***	**28.0078-075***
100 cm	**28.0016-100***	**28.0064-100***	**28.0017-100***	**28.0078-100***
150 cm	**28.0016-150***	**28.0064-150***	**28.0017-150***	**28.0078-150***
200 cm	**28.0016-200***	**28.0064-200***	**28.0017-200***	**28.0078-200***

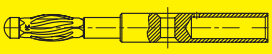

LS425

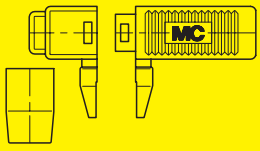

KT410-D90
KT425-D90

Insulator	**KT410-D90, Order No. 22.2220-***		**KT425-D90, Order No. 22.2240-***	
Multilam plug	**LS425, Order No. 22.1000**			
Multistrand wires, see pages 124 - 126.	**FLEXI-E/HK 1,0 (PVC) Order No. 60.7009-***	**SILI-E 1,0 (Silicone) Order No. 61.7554-***	**FLEXI-E 2,5 (PVC) Order No. 60.7012-***	**SILI-E 2,5 (Silicone) Order No. 61.7556-***
Assembly instructions on request !	MA 121			

*Colour code	**20** green-yellow	**21** black	**22** red	**23** blue	**24** yellow	**25** green	**26** violet	**27** brown	**28** grey	**29** white	**30** orange	**33** transparent

Highly flexible connecting leads with ø 4 mm stackable Multilam plugs on both ends. LK425 and LK425/SIL with specially shaped insulator designed to provide a firm grip without slipping.

LK425-G and LK425-G/SIL with additional ø 4 mm socket parallel to the plug. Therefore, extension, jumper and branch plugging are possible.

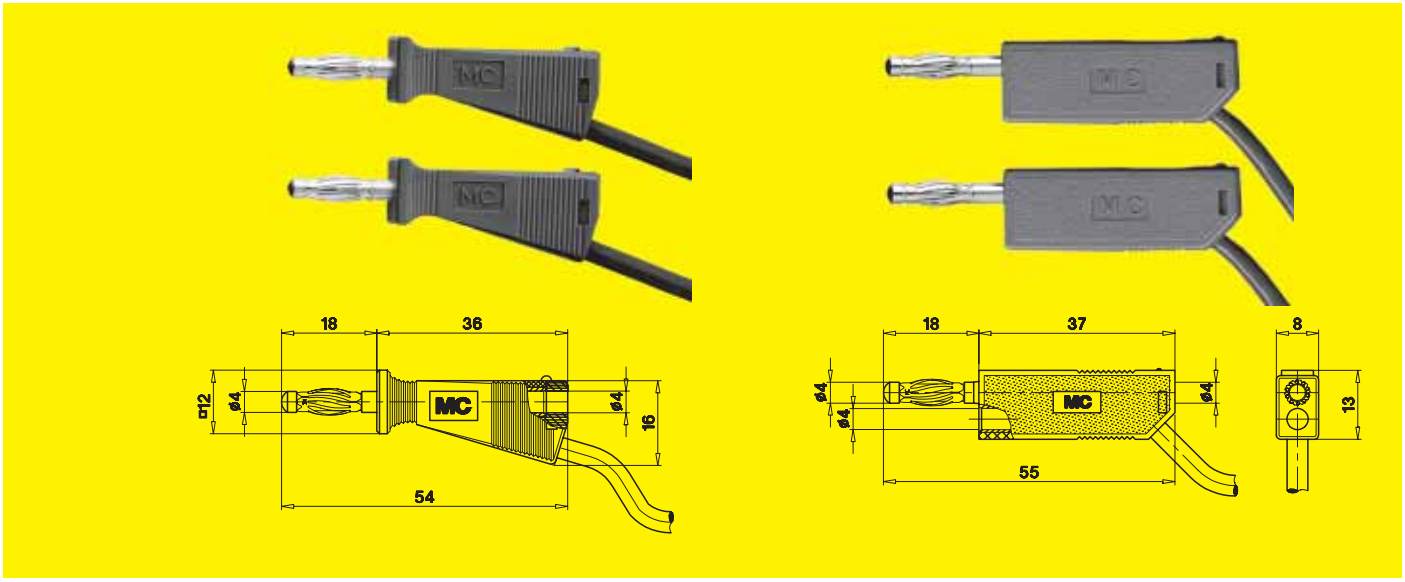

Type	LK425	LK425/SIL	LK425-G	LK425-G/SIL
Rated current	32 A	32 A	32 A	32 A
Contact resistance	0.2 mΩ	0.2 mΩ	0.4 mΩ	0.4 mΩ
Lead cross section	2.5 mm²	2.5 mm²	2.5 mm²	2.5 mm²
Lead insulation	PVC	Silicone	PVC	Silicone
Lead operating temperature	-10°C ... +70°C	-80°C ... +150°C	-10°C ... +70°C	-80°C ... +150°C
Insulation	PA	PA	PA	PA
Insulation operating temperature	-40°C ... +80°C	-40°C ... +80°C	-40°C ... +80°C	-40°C ... +80°C
Metal part, plating	brass, gold-plated	brass, gold-plated	brass, nickel-plated	brass, nickel-plated
Standard colours*	20 - 29	21 - 25	21 - 25	21 - 25
Standard lengths:	**Order No.**	**Order No.**	**Order No.**	**Order No.**
25 cm	**28.0071-025***	**28.0072-025***	**28.0079-025***	**28.0080-025***
50 cm	**28.0071-050***	**28.0072-050***	**28.0079-050***	**28.0080-050***
75 cm	**28.0071-075***	**28.0072-075***	**28.0079-075***	**28.0080-075***
100 cm	**28.0071-100***	**28.0072-100***	**28.0079-100***	**28.0080-100***
150 cm	**28.0071-150***	**28.0072-150***	**28.0079-150***	**28.0080-150***
200 cm	**28.0071-200***	**28.0072-200***	**28.0079-200***	**28.0080-200***

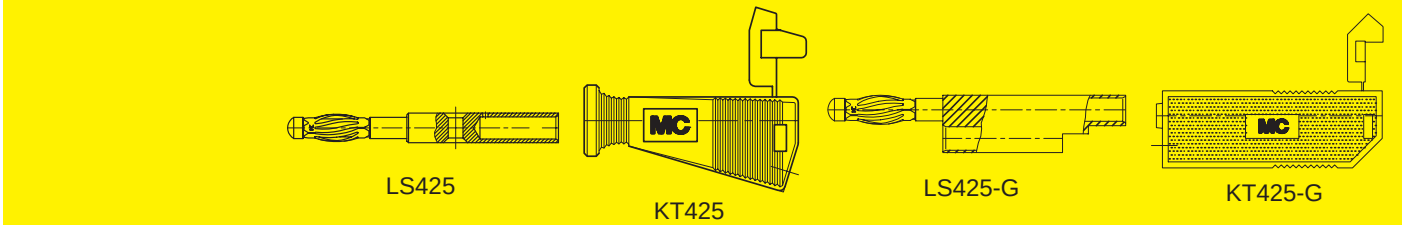

LS425 KT425 LS425-G KT425-G

Insulator	**KT425, Order No. 22.2120-***		**KT425-G, Order No. 22.2330-***	
Multilam plug	**LS425, Order No. 22.1000**		**LS425-G, Order No. 22.1034**	
Multistrand wires, see pages 124 - 126.	**FLEXI-E 2,5 (PVC) Order No. 60.7012-***	**SILI-E 2,5 (Silicone) Order No. 61.7556-***	**FLEXI-E 2,5 (PVC) Order No. 60.7012-***	**SILI-E 2,5 (Silicone) Order No. 61.7556-***
Assembly instructions on request !	MA 122		MA 123	

*Colour code	**20**	**21**	**22**	**23**	**24**	**25**	**26**	**27**	**28**	**29**	**30**	**33**
	green-yellow	black	red	blue	yellow	green	violet	brown	grey	white	orange	transparent

Highly flexible connecting leads with ø 4 mm stackable hollow plugs on both ends.



LK4-A LK4-A/SIL



LK4-B LK4-B/SIL LK4-B1,

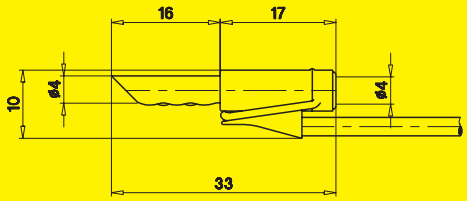

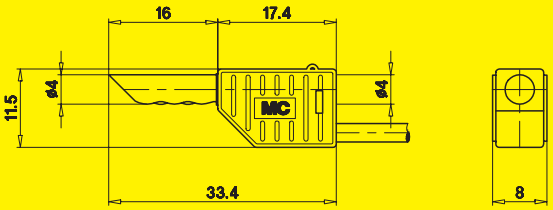

Type	LK4-A	LK4-A/SIL	LK4-B	LK4-B/SIL	LK4-B1,5
Rated current	19 A	19 A	19 A	19 A	24 A
Contact resistance	0.3 mΩ	0.3 mΩ	0.3 mΩ	0.3 mΩ	0.3 mΩ
Lead cross section	1.0 mm²	1.0 mm²	1.0 mm²	1.0 mm²	1.5 mm²
Lead insulation	PVC	Silicone	PVC	Silicone	PVC
Lead operating temperature	-10°C ... +70°C	-80°C ... +150°C	-10°C ... +70°C	-80°C ... +150°C	-10°C ... +70°C
Insulation	PA	PA	PA	PA	PA
Insulation operating temperature	-40°C ... +80°C	-40°C ... +80°C	-40°C ... +80°C	-40°C ... +80°C	-40°C ... +80°C
Metal part, plating	hard-drawn copper alloy, gold-plated	hard-drawn copper alloy, gold-plated	hard-drawn copper alloy, gold-plated	hard-drawn copper alloy, gold-plated	hard-drawn copper alloy, gold-plated
Standard colours*	20 - 29	21 - 26	20 - 29	21 - 26	20 - 29
Standard lengths:	**Order No.**	**Order No.**	**Order No.**	**Order No.**	**Order No.**
25 cm	**28.0053-025***	**28.0054-025***	**28.0055-025***	**28.0056-025***	**28.0057-025***
50 cm	**28.0053-050***	**28.0054-050***	**28.0055-050***	**28.0056-050***	**28.0057-050***
75 cm	**28.0053-075***	**28.0054-075***	**28.0055-075***	**28.0056-075***	**28.0057-075***
100 cm	**28.0053-100***	**28.0054-100***	**28.0055-100***	**28.0056-100***	**28.0057-100***
150 cm	**28.0053-150***	**28.0054-150***	**28.0055-150***	**28.0056-150***	**28.0057-150***
200 cm	**28.0053-200***	**28.0054-200***	**28.0055-200***	**28.0056-200***	**28.0057-200***

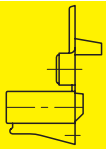

KT4-A



LS4
LS4N

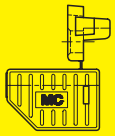

KT4-B
KT4-B1,5

Insulator	**KT4-A, Order No. 22.2050-***		**KT4-B, Order No. 22.2060-***		**KT4-B1,5 Order No. 22.2130-***
Hollow plug	**LS4, Order No. 22.1005** (gold-plated) **LS4N, Order No. 22.5068** (nickel-plated)				
Multistrand wires, see pages 124 - 126.	**FLEXI-E/HK 1,0 (PVC) Order No. 60.7009-***	**SILI-E 1,0 (Silicone) Order No. 61.7554-***	**FLEXI-E/HK 1,0 (PVC) Order No. 60.7009-***	**SILI-E 1,0 (Silicone) Order No. 61.7554-***	**FLEXI-E 1,5 (PVC) Order No. 60.7010-***
Assembly instructions on request !	MA 118		MA 111		

*Colour code	**20** green-yellow	**21** black	**22** red	**23** blue	**24** yellow	**25** green	**26** violet	**27** brown	**28** grey	**29** white	**30** orange	**33** transparent

Highly flexible connecting leads with ø 4 mm stackable hollow plugs on both ends. With 90° wire outlet.



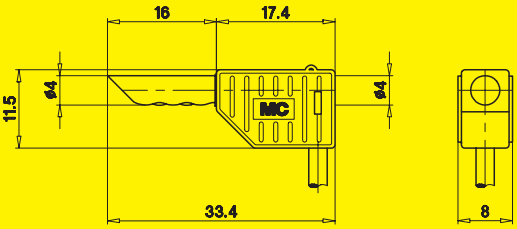

Type	LK4-B90	LK4-B90/SIL
Rated current	19 A	19 A
Contact resistance	0.3 mΩ	0.3 mΩ
Lead cross section	1.0 mm²	1.0 mm²
Lead insulation	PVC	Silicone
Lead operating temperature	-10°C ... +70°C	-80°C ... +150°C
Insulation	PA	PA
Insulation operating temperature	-40°C ... +80°C	-40°C ... +80°C
Metal part, plating	hard-drawn copper alloy, gold-plated	hard-drawn copper alloy, gold-plated
Standard colours*	20 - 21, 23 - 29	21, 23 - 26
Standard lengths:	**Order No.**	**Order No.**
25 cm	**28.0058-025***	**28.0059-025***
50 cm	**28.0058-050***	**28.0059-050***
75 cm	**28.0058-075***	**28.0059-075***
100 cm	**28.0058-100***	**28.0059-100***
150 cm	**28.0058-150***	**28.0059-150***
200 cm	**28.0058-200***	**28.0059-200***



LS4
LS4N

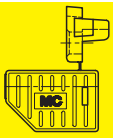

KT4-B90

Insulator	**KT4-B90, Order No. 22.2110-***	
Hollow plug	**LS4, Order No. 22.1005** (gold-plated) **LS4N, Order No. 22.5068** (nickel-plated)	
Multistrand wires, see pages 124 - 126.	**FLEXI-E/HK 1,0 (PVC), Order No. 60.7009-***	**SILI-E 1,0 (Silicone), Order No. 61.7554-***
Assembly instructions on request !	MA 111	

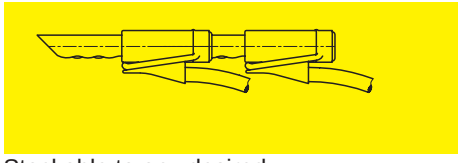

Stackable to any desired

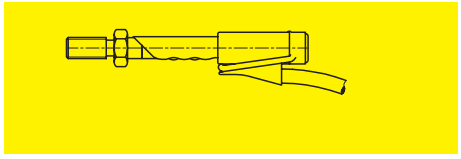

Contact to rigid or spring-loaded

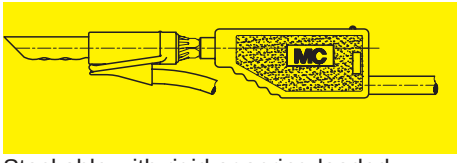

Stackable with rigid or spring-loaded

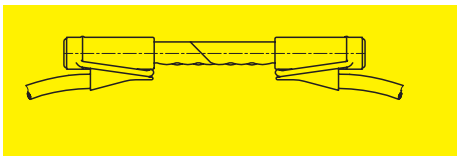

Face to face connection

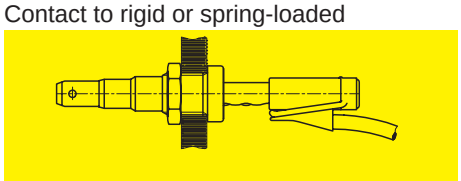

Contact to rigid or spring-loaded sockets

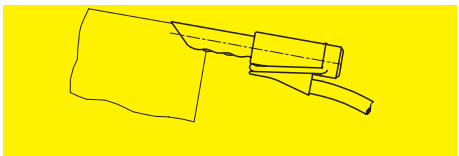

Clamping contact on edges, shets or housing parts for earthing purposes

*Colour code	20	21	22	23	24	25	26	27	28	29	30	33
	green-yellow	black	red	blue	yellow	green	violet	brown	grey	white	orange	transparent

Highly flexible connecting leads with ø 4 mm Multilam plugs on both ends.



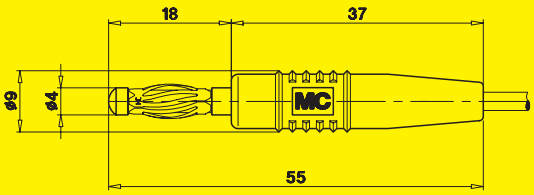

Type	LK410-L	LK410-L/SIL	LK415-L	LK425-L
Rated current	19 A	19 A	24 A	32 A
Contact resistance	0.2 mΩ	0.2 mΩ	0.2 mΩ	0.2 mΩ
Lead cross section	1.0 mm²	1.0 mm²	1.5 mm²	2.5 mm²
Lead insulation	PVC	Silicone	PVC	PVC
Lead operating temperature	-10°C ... +70°C	-80°C ... +150°C	-10°C ... +70°C	-10°C ... +70°C
Insulation	PVC	PVC	PVC	PVC
Insulation operating temperature	-10°C ... +80°C	-10°C ... +80°C	-10°C ... +80°C	-10°C ... +80°C
Metal part, plating	brass, gold-plated	brass, gold-plated	brass, gold-plated	brass, gold-plated
Standard colours*	20 - 29	21 - 26	20 - 29	20 - 29
Standard lengths:	**Order No.**	**Order No.**	**Order No.**	**Order No.**
25 cm	**28.0065-025***	**28.0066-025***	**28.0070-025***	**28.0081-025***
50 cm	**28.0065-050***	**28.0066-050***	**28.0070-050***	**28.0081-050***
75 cm	**28.0065-075***	**28.0066-075***	**28.0070-075***	**28.0081-075***
100 cm	**28.0065-100***	**28.0066-100***	**28.0070-100***	**28.0081-100***
150 cm	**28.0065-150***	**28.0066-150***	**28.0070-150***	**28.0081-150***
200 cm	**28.0065-200***	**28.0066-200***	**28.0070-200***	**28.0081-200***

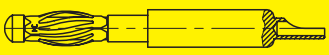

LS410-L
LS425-L

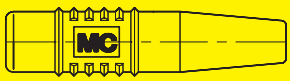

KT410-L
KT415-L
KT425-L

Insulator	**KT410-L Order No. 22.2170-***		**KT415-L Order No. 22.2180-***	**KT425-L Order No. 22.2190-***
Multilam plug	**LS410-L Order No. 22.1011**			**LS425-L Order No. 22.1015**
Multistrand wires, see pages 124 - 126.	**FLEXI-E/HK 1,0 (PVC) Order No. 60.7009-***	**SILI-E 1,0 (Silicone) Order No. 61.7554-***	**FLEXI-E 1,5 (PVC) Order No. 60.7010-***	**FLEXI-E 2,5 (PVC) Order No. 60.7012-***
Assembly instructions on request !	MA 116			

*Colour code	**20**	**21**	**22**	**23**	**24**	**25**	**26**	**27**	**28**	**29**	**30**	**33**
	green-yellow	black	red	blue	yellow	green	violet	brown	grey	white	orange	transparent

FAL, SAL
Highly flexible connecting leads with ø 4 mm Multilam plugs on both ends.

AK410-L/B
Highly flexible coupling and extension lead. One end with ø 4 mm Multilam plug, the other end with ø 4 mm rigid socket.

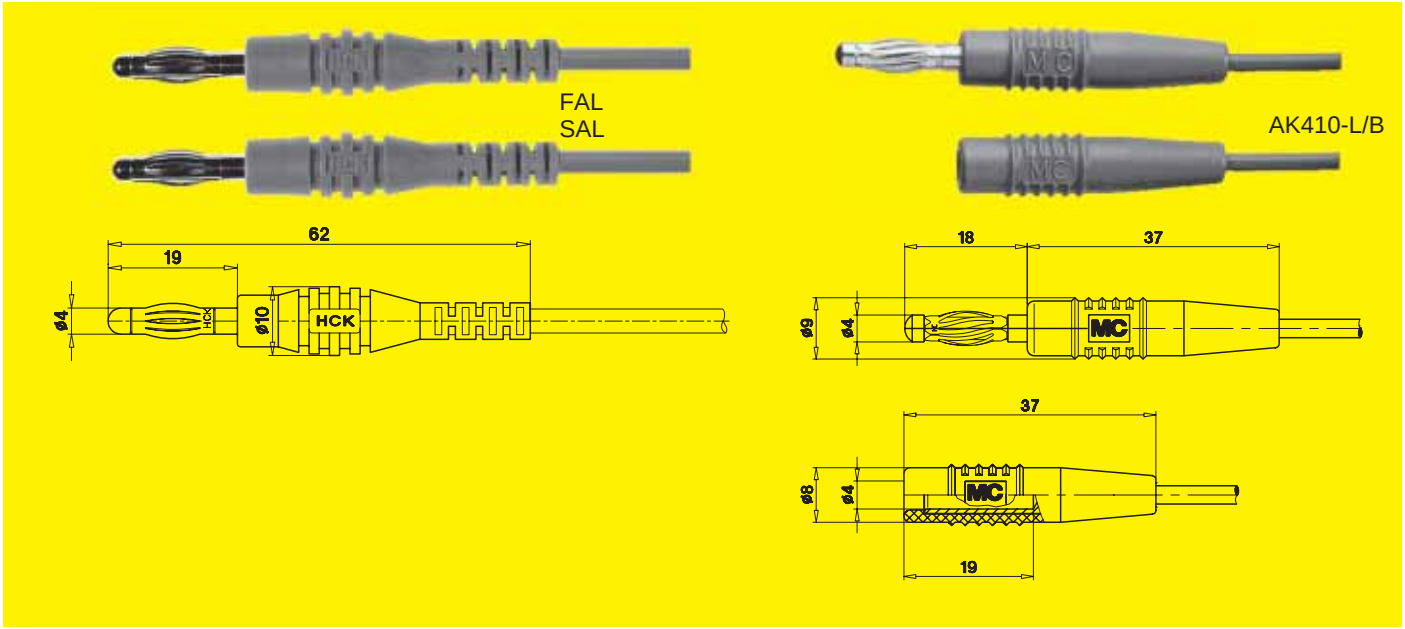

Type	FAL	SAL	AK410-L/B
Rated current	15 A	15 A	19 A
Contact resistance	0.8 mΩ	0.8 mΩ	0.2 mΩ (Multilam plug)
Lead cross section	0.75 mm²	0.75 mm²	1.0 mm²
Lead insulation	PVC	Silicone	PVC
Lead operating temperature	-10°C ... +70°C	-80°C ... +150°C	-10°C ... +70°C
Insulation	PA	PA	PVC
Insulation operating temperature	-40°C ... +80°C	-40°C ... +80°C	-10°C ... +80°C
Metal parts, plating	brass, nickel-plated	brass, nickel-plated	brass, gold-plated
Standard colours*	21 - 25	21 - 25	20 - 29
Standard lengths:	**Order No.**	**Order No.**	**Order No.**
25 cm	**64.9289-025***	**64.9291-025***	**28.0014-025***
50 cm	**64.9289-050***	**64.9291-050***	**28.0014-050***
75 cm	–	–	**28.0014-075***
100 cm	**64.9289-100***	**64.9291-100***	**28.0014-100***
150 cm	**64.9289-150***	**64.9291-150***	**28.0014-150***
200 cm	**64.9289-200***	**64.9291-200***	**28.0014-200***

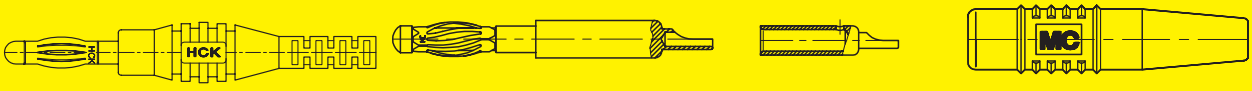

L-400 LS410-L LS410-B KT410-L

Insulator	plug complete: **L-400, Order No. 64.9294-***		**KT410-L, Order No. 22.2170-***
Multilam plug			**LS410-L, Order No. 22.1011**
Socket	–		**LS410-B, Order No. 22.1012**
Multistrand wires, see pages 124 - 126.	**FLEXI-2V 0,75 (PVC) Order No. 60.7028-***	**SILI-1V 0,75 (Silicone) Order No. 61.7606-***	**FLEXI-E/HK 1,0 (PVC) Order No. 60.7009-***
Assembly instructions on request !	–		MA 116 + MA 117

*Colour code	20	21	22	23	24	25	26	27	28	29	30	33
	green-yellow	black	red	blue	yellow	green	violet	brown	grey	white	orange	transparent

Highly flexible extension leads with ø 4 mm rigid socket on both ends.



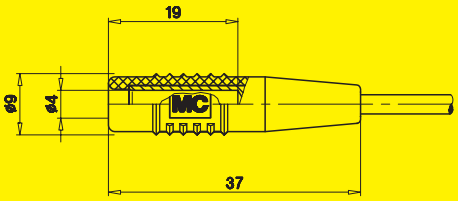

Type	LK410-B	LK410-B/SIL	LK415-B	LK425-B
Rated current	19 A	19 A	24 A	32 A
Lead cross section	1.0 mm²	1.0 mm²	1.5 mm²	2.5 mm²
Lead insulation	PVC	Silicone	PVC	PVC
Lead operating temperature	-10°C ... +70°C	-80°C ... +150°C	-10°C ... +70°C	-10°C ... +70°C
Insulation	PVC	PVC	PVC	PVC
Insulation operating temperature	-10°C ... +80°C	-10°C ... +80°C	-10°C ... +80°C	-10°C ... +80°C
Metal part, plating	brass, gold-plated	brass, gold-plated	brass, gold-plated	brass, gold-plated
Standard colours*	20 - 29	21 - 26	20 - 29	20 - 29
Standard lengths:	**Order No.**	**Order No.**	**Order No.**	**Order No.**
25 cm	**28.0062-025***	**28.0063-025***	**28.0069-025***	**28.0077-025***
50 cm	**28.0062-050***	**28.0063-050***	**28.0069-050***	**28.0077-050***
75 cm	**28.0062-075***	**28.0063-075***	**28.0069-075***	**28.0077-075***
100 cm	**28.0062-100***	**28.0063-100***	**28.0069-100***	**28.0077-100***
150 cm	**28.0062-150***	**28.0063-150***	**28.0069-150***	**28.0077-150***
200 cm	**28.0062-200***	**28.0063-200***	**28.0069-200***	**28.0077-200***



LS410-B
LS425-B

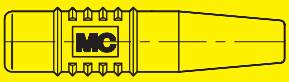

KT410-L
KT415-L
KT425-L

Insulator	**KT410-L Order No. 22.2170-***		**KT415-L Order No. 22.2180-***	**KT425-L Order No. 22.2190-***
Socket	**LS410-B Order No. 22.1012**			**LS425-B Order No. 22.1016**
Multistrand wires, see pages 124 - 126.	**FLEXI-E/HK 1,0 (PVC) Order No. 60.7009-***	**SILI-E 1,0 (Silicone) Order No. 61.7554-***	**FLEXI-E 1,5 (PVC) Order No. 60.7010-***	**FLEXI-E 2,5 (PVC) Order No. 60.7012-***
Assembly instructions on request !	MA 117			

*Colour code	**20**	**21**	**22**	**23**	**24**	**25**	**26**	**27**	**28**	**29**	**30**	**33**
	green-yellow	black	red	blue	yellow	green	violet	brown	grey	white	orange	transparent

Highly flexible connecting leads with ø 4 mm stackable Multilam plugs on both ends. The plugs are provided with guards against accidental contact.

The guard sleeve over the Multilam plug is spring-loaded and retracts when the plug is inserted into a ø 4 mm socket.

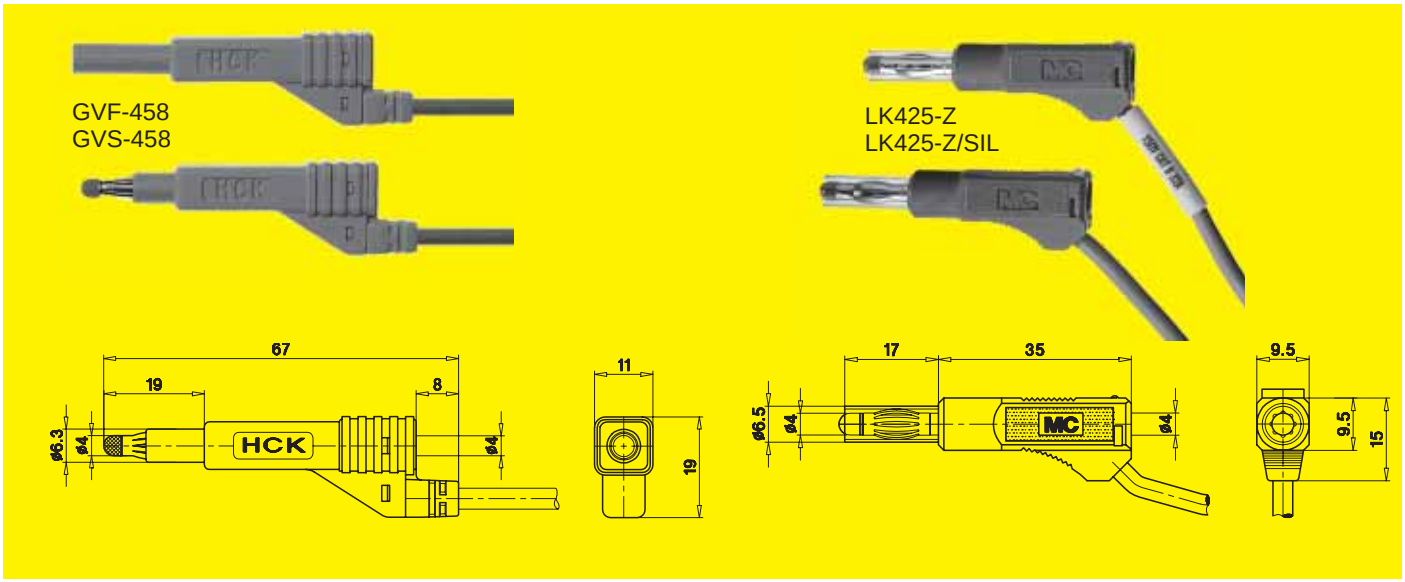

Type	GVF-458	GVS-458	LK425-Z	LK425-Z/SIL
Rated voltage	150 V, CAT II	150 V, CAT II	150 V, CAT II	150 V, CAT II
Rated current	19 A	19 A	32 A	32 A
Contact resistance	0.8 mΩ	0.8 mΩ	0.8 mΩ	0.8 mΩ
Lead cross section	1.0 mm²	1.0 mm²	2.5 mm²	2.5 mm²
Lead insulation	PVC	Silicone	PVC	Silicone
Lead operating temperature	-10°C ... +70°C	-80°C ... +150°C	-10°C ... +70°C	-80°C ... +150°C
Insulation guard sleeve	PA PA	PA PA	PA PC, transparent	PA PC, transparent
Insulation operating temperature	-40°C ... +80°C	-40°C ... +80°C	-40°C ... +80°C	-40°C ... +80°C
Metal part, plating	brass, nickel-plated	brass, nickel-plated	brass, nickel-plated	brass, nickel-plated
Standard colours*	21 - 23	21 - 23	21 - 25, 29	21 - 25
Standard lengths:	**Order No.**	**Order No.**	**Order No.**	**Order No.**
25 cm	**64.9704-025***	**64.9705-025***	**28.0018-025***	**28.0019-025***
50 cm	**64.9704-050***	**64.9705-050***	**28.0018-050***	**28.0019-050***
75 cm	**–**	**–**	**28.0018-075***	**28.0019-075***
100 cm	**64.9704-100***	**64.9705-100***	**28.0018-100***	**28.0019-100***
150 cm	**64.9704-150***	**64.9705-150***	**28.0018-150***	**28.0019-150***
200 cm	**64.9704-200***	**64.9705-200***	**28.0018-200***	**28.0019-200***

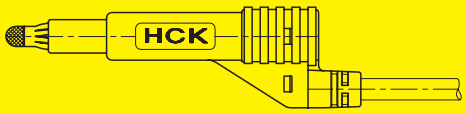

Retractable sleeve plug (complete as separate parts)	**GL-458, Order No. 64.9718-*** (screw type connection)		Not available as separate parts !
Multistrand wires, see pages 124 - 126.	**FLEXI-2V 1,0 (PVC) Order No. 60.7030-***	**SILI-1V 1,0 (Silicone) Order No. 61.7607-***	
Assembly instructions	MA 523		–

*Colour code	20	21	22	23	24	25	26	27	28	29	30	33
	green-yellow	black	red	blue	yellow	green	violet	brown	grey	white	orange	transparent

Highly flexible connecting leads with ø 4 mm Multilam plugs on both ends. The plugs are provided with guards against accidental contact.

The guard sleeve over the Multilam plug is spring-loaded and retracts when the plug is inserted into a ø 4 mm socket.

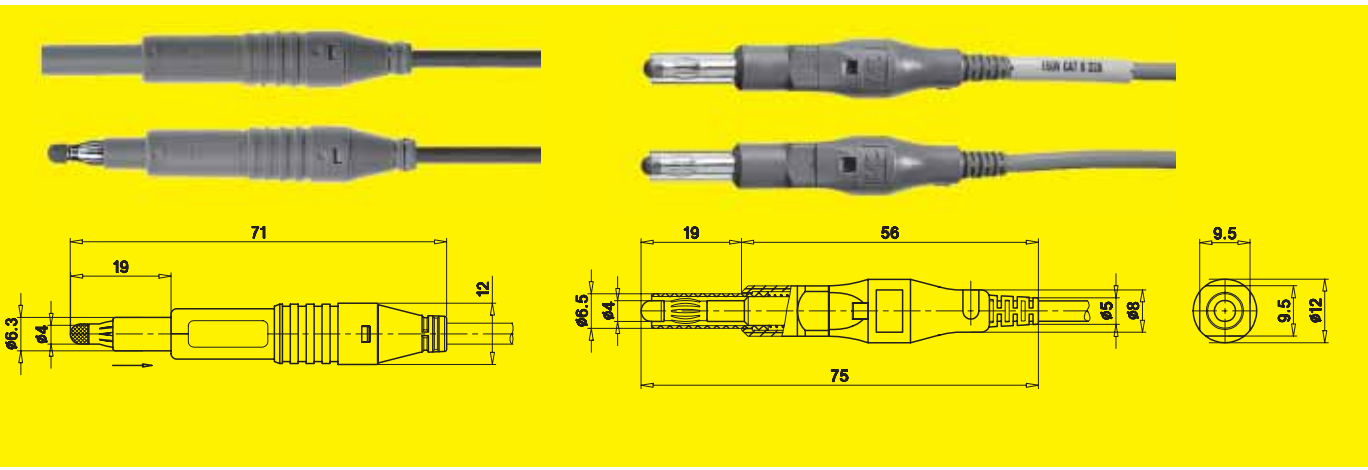

Type	GMF-438	GMS-438	LK425-ZL	LK425-ZL/SIL
Rated voltage	150 V, CAT II	150 V, CAT II	150 V, CAT II	150 V, CAT II
Rated current	19 A	19 A	32 A	32 A
Contact resistance	0.8 mΩ	0.8 mΩ	0.8 mΩ	0.8 mΩ
Lead cross section	1.0 mm²	1.0 mm²	2.5 mm²	2.5 mm²
Lead insulation	PVC	Silicone	PVC	Silicone
Lead operating temperature	-10°C ... +70°C	-80°C ... +150°C	-10°C ... +70°C	-80°C ... +150°C
Insulation guard sleeve	PA PA	PA PA	PA PC, transparent	PA PC, transparent
Insulation operating temperature	-40°C ... +80°C	-40°C ... +80°C	-40°C ... +80°C	-40°C ... +80°C
Metal parts, plating	brass, nickel-plated	brass, nickel-plated	brass, nickel-plated	brass, nickel-plated
Standard colours*	21 - 23	21 - 23	21 - 25	21 - 25
Standard lengths:	**Order No.**	**Order No.**	**Order No.**	**Order No.**
25 cm	**64.9710-025***	**64.9711-025***	**49.0112-025***	**49.0120-025***
50 cm	**64.9710-050***	**64.9711-050***	**49.0112-050***	**49.0120-050***
75 cm	**–**	**–**	**49.0112-075***	**49.0120-075***
100 cm	**64.9710-100***	**64.9711-100***	**49.0112-100***	**49.0120-100***
150 cm	**64.9710-150***	**64.9711-150***	**49.0112-150***	**49.0120-150***
200 cm	**64.9710-200***	**64.9711-200***	**49.0112-200***	**49.0120-200***

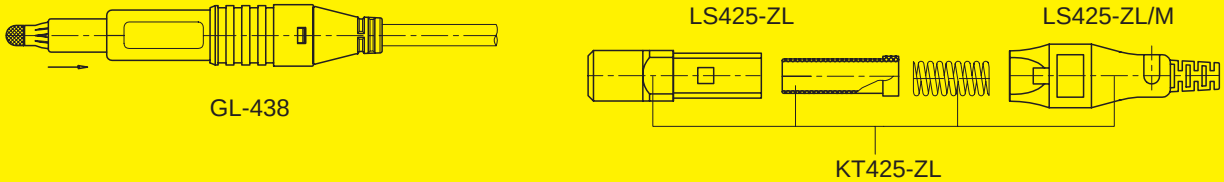

Insulator	retractable sleeve plug (complete as separate parts): **GL-438, Order No. 64.9701-*** (screw type connection)		**KT425-ZL, Order No. 50.1138-***	
Multilam plug			**LS425-ZL, Order No. 49.2030 LS425-ZL/M3, Order No. 49.2029** (screw type connection)	
Multistrand wires, see pages 124 - 126.	**FLEXI-2V 1,0 (PVC) Order No. 60.7030-***	**SILI-1V 1,0 (Silicone) Order No. 61.7607-***	**FLEXI-E 2,5 (PVC) Order No. 60.7012-***	**SILI-E 2,5 (Silicone) Order No. 61.7556-***
Assembly instructions	MA 522		MA 130 (on request)	

*Colour code	**20**	**21**	**22**	**23**	**24**	**25**	**26**	**27**	**28**	**29**	**30**	**33**
	green-yellow	black	red	blue	yellow	green	violet	brown	grey	white	orange	transparent

Highly flexible connecting leads. One end with a ø 4 mm Multilam plug with guard against accidental contact, the other end with touch-protected ø 4 mm safety plug, axial or right-angled according to choice.
The guard sleeve over the Multilam plug is spring-loaded and retracts when the plug is inserted into a ø 4 mm socket.

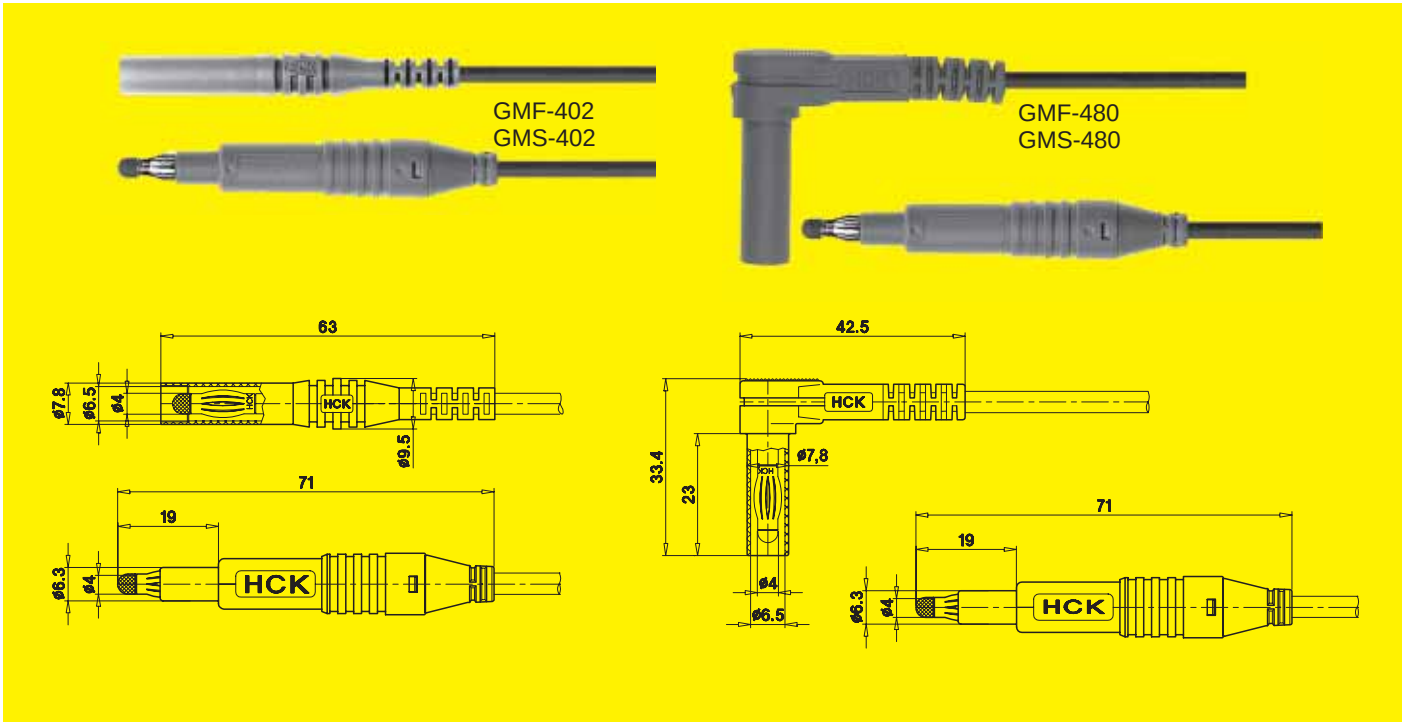

Type	GMF-402	GMS-402	GMF-480	GMS-480
Rated voltage	150 V, CAT II	150 V, CAT II	150 V, CAT II	150 V, CAT II
Rated current	19 A	19 A	19 A	19 A
Contact resistance	0.8 mΩ	0.8 mΩ	0.8 mΩ	0.8 mΩ
Lead cross section	1.0 mm²	1.0 mm²	1.0 mm²	1.0 mm²
Lead insulation	PVC	Silicone	PVC	Silicone
Lead operating temperature	-10°C ... +70°C	-80°C ... +150°C	-10°C ... +70°C	-80°C ... +150°C
Safety plug design	axial	axial	right-angled	right-angled
Insulation - retractable sleeve plug - safety plug	 PA PA	 PA PA	 PA TPE	 PA TPE
Insulation operating temperature	-40°C ... +80°C	-40°C ... +80°C	-40°C ... +80°C	-40°C ... +80°C
Metal parts, plating	brass, nickel-plated	brass, nickel-plated	brass, nickel-plated	brass, nickel-plated
Standard colours*	21 - 23	21 - 23	21 - 23	21 - 23
Standard lengths:	**Order No.**	**Order No.**	**Order No.**	**Order No.**
25 cm	**64.9717-025***	**64.9716-025***	**64.9714-025***	**64.9715-025***
50 cm	**64.9717-050***	**64.9716-050***	**64.9714-050***	**64.9715-050***
100 cm	**64.9717-100***	**64.9716-100***	**64.9714-100***	**64.9715-100***
150 cm	**64.9717-150***	**64.9716-150***	**64.9714-150***	**64.9715-150***
200 cm	**64.9717-200***	**64.9716-200***	**64.9714-200***	**64.9715-200***

	Not available as separate parts !

*Colour code	20	21	22	23	24	25	26	27	28	29	30	33
	green-yellow	black	red	blue	yellow	green	violet	brown	grey	white	orange	transparent

Axial ø 4 mm spring-loaded Multilam plugs with solder or screw connection and ø 4 mm rigid sockets with solder connection for multistrand wires up to 2.5 mm^2.

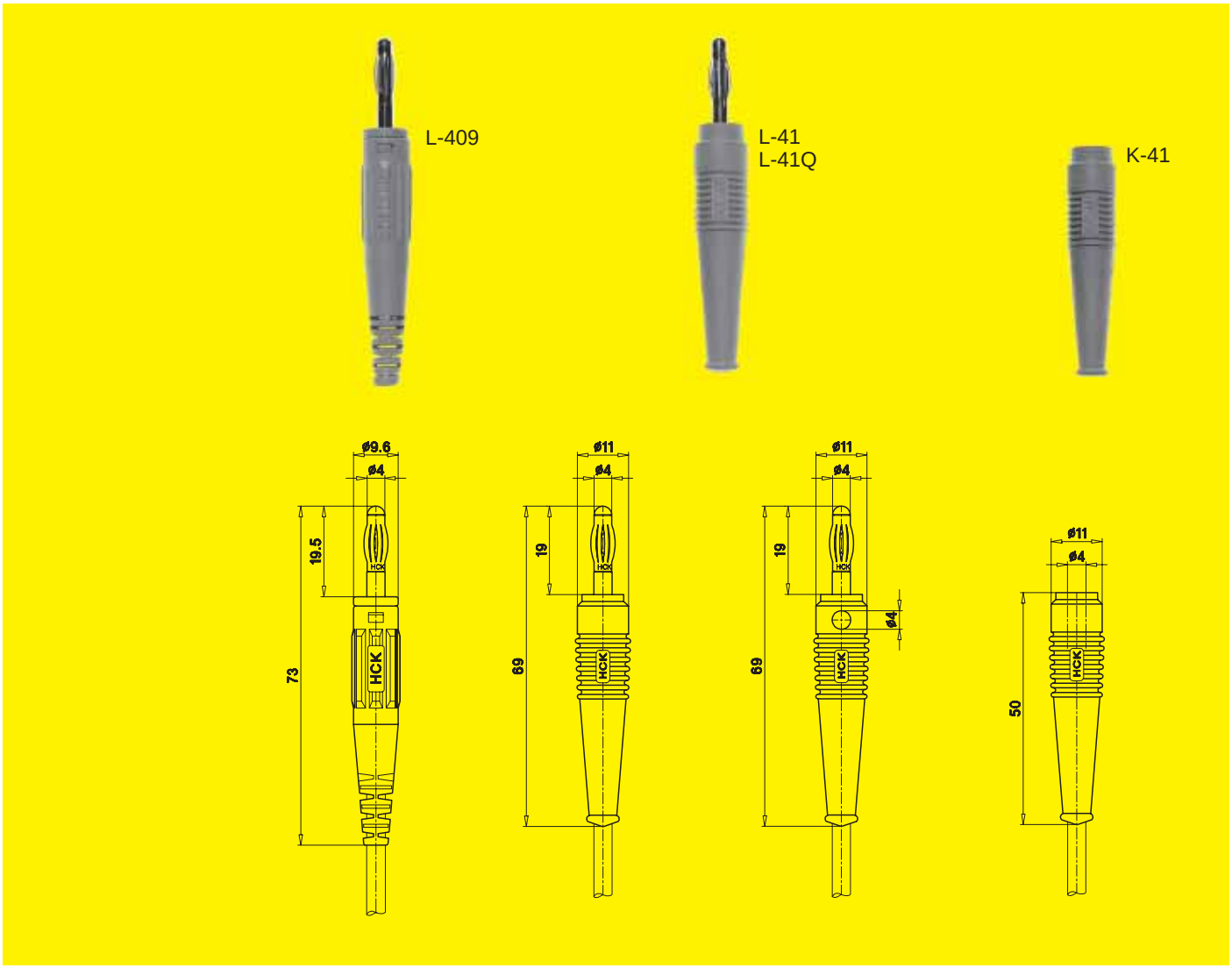

Type	L-409	L-41	L-41Q	K-41
Rated current	20 A	20 A	20 A	20 A
Design	plug	plug	plug	socket
Contact resistance	0.8 mΩ	0.8 mΩ	0.8 mΩ	–
Insulation	PA	TPE	TPE	TPE
Operating temperature	-40°C ... +80°C	-40°C ... +80°C	-40°C ... +80°C	-40°C ... +80°C
Max. cross section / outer diameter of multistrand wire	2.5 mm^2 / ø 3.9 mm	2.5 mm^2 / ø 3.9 mm	2.5 mm^2 / ø 3.9 mm	2.5 mm^2 / ø 3.9 mm
Metal parts, plating	brass, nickel-plated	brass, nickel-plated	brass, nickel-plated	brass, nickel-plated
Connection / Assembly	screw connection	solder connection	solder connection	solder connection
	Ⓐ	Ⓐ	Ⓐ	Ⓐ
Standard colours*	21 - 27, 29	21 - 27, 29	21 - 27, 29	21 - 27, 29
Order No.	**64.9195-***	**64.9200-***	**64.9199-***	**64.9201-***

*Colour code	**20** green-yellow	**21** black	**22** red	**23** blue	**24** yellow	**25** green	**26** violet	**27** brown	**28** grey	**29** white	**30** orange	**33** transparent

ø 4 mm stackable plugs with solder connection for multistrand wires.


L-421


L-471


H-491

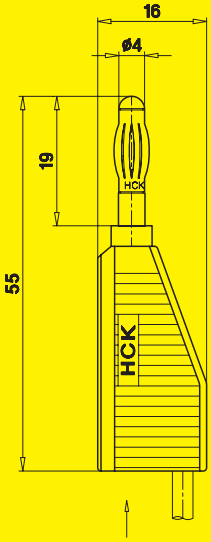

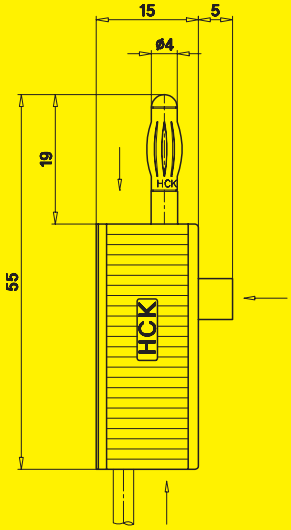

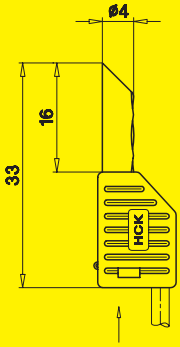

Type	L-421	L-471	H-491N
Rated current	28 A	32 A	20 A
Design	with Multilam plug and axial ø 4 mm rigid socket	with Multilam plug and one right-angled and two axial rigid ø 4 mm sockets	with hollow plug and axial ø 4 mm rigid socket
Contact resistance	0.8 mΩ	0.8 mΩ	0.8 mΩ
Insulation	PP	PP	PA
Operating temperature	-40°C ... +80°C	-40°C ... +80°C	-40°C ... +80°C
Max. cross section / outer diameter of multistrand wire	max. 1.5 mm^2 / max. ø 4.0 mm	0.75 mm^2 ... 2.5 mm^2 / max. ø 4.0 mm	max. 1.0 mm^2 / max. ø 2.7 mm
Metal parts, plating	brass, nickel-plated	brass, nickel-plated	hard-drawn copper alloy, nickel-plated
Connection for multistrand wire	solder connection	solder connection	solder connection
	A,	A	A
Standard colours*	21 - 27, 29	21 - 27, 29	21 - 27, 29
Order No.	**64.9203-***	**64.9204-***	**64.9292-***

*Colour code	**20** green-yellow	**21** black	**22** red	**23** blue	**24** yellow	**25** green	**26** violet	**27** brown	**28** grey	**29** white	**30** orange	**33** transparent

ø 4 mm Multilam plugs are machined from brass, then gold- or nickel-plated. A recess serves as seat for the freely movable Multilam contact cage. It is punched from rigid hard-drawn copper alloy sheet, rolled and formed so that the louvres bulge outward. The spring action of the louvres provides constant pressure in the plugged condition.
Our Multilam plugs are fitted with two fundamentally different types of Multilam:

The traditional, straight form or the newer, twisted form.
The twisted design has even better electrical and mechanical properties for a plug connection:

- ❑ Defined contact points on both sides of the edges of the louvres.
- ❑ Uniformly distributed surface abraision when plugging. No scoring in socket.



Technical Data

	Multilam version “straight"	Multilam version “twisted"
Multilam type	LAIIIS/4/0,15	LAIIIT-S/4/0,2 (patented)
		
	For detailed information on the various types of Multilams, see our publication “The Multilam Principle"	
Remarks	Traditional, straight form, a proven MC® design with very good electrical and mechanical properties for a plug connection	“twisted” form with even better electrical and mechanical properties for a plug connection
Nominal diameter	ø 4 mm	ø 4 mm
Upper temperature limit	150 °C	150 °C
Rated current, max.	50 A	50 A
Contact resistance, gold-plated version	0.3 mΩ	0.2 mΩ
Contact resistance, nickel-plated version	0.8 mΩ	0.4 mΩ

*Colour code	**20** green-yellow	**21** black	**22** red	**23** blue	**24** yellow	**25** green	**26** violet	**27** brown	**28** grey	**29** white	**30** orange	**33** transparent

ø 4 mm Multilam plugs with M3 screw connection in various versions.

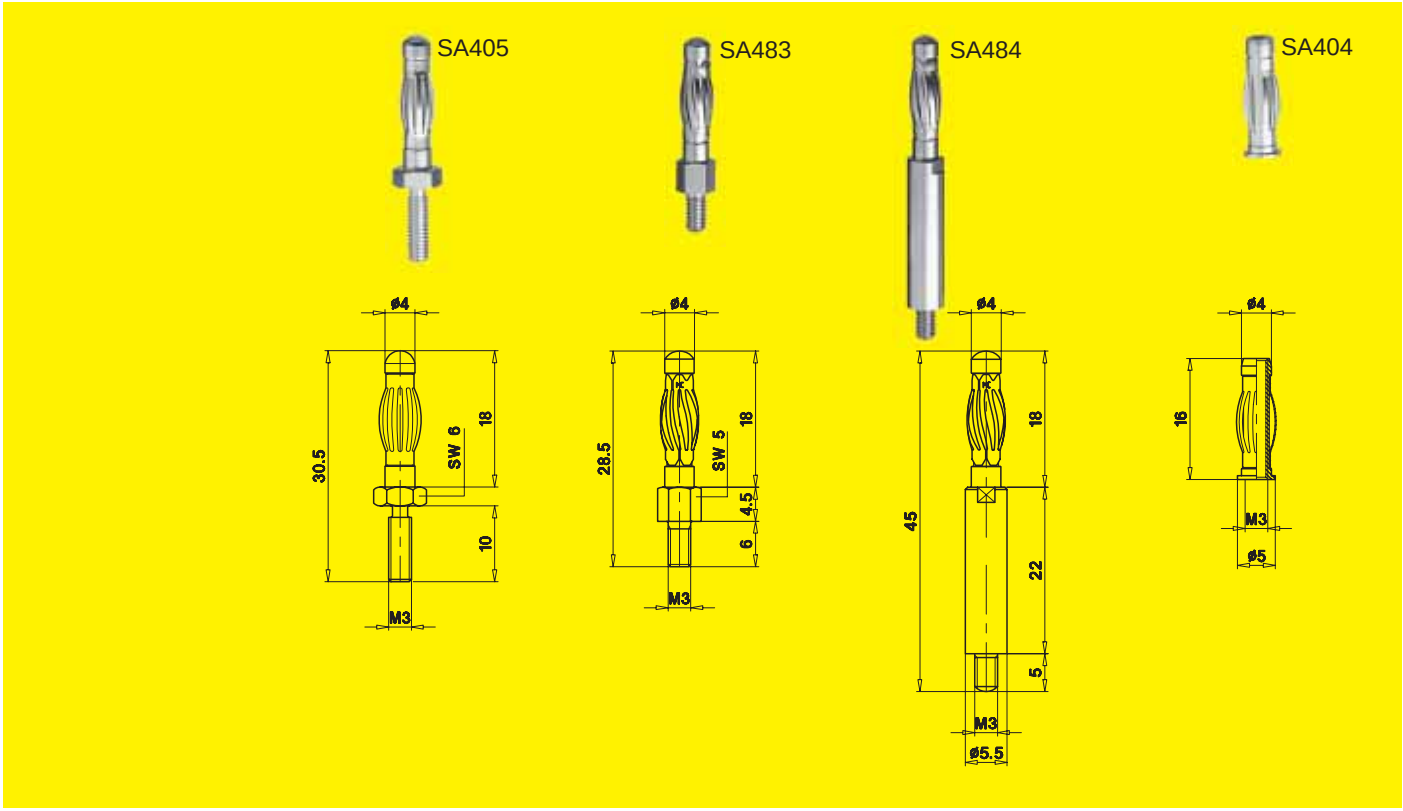

Type	SA405	SA483	SA484	SA404
Rated current (according to connecting method and cross section)	max. 50 A	max. 50 A	max. 50 A	max. 50 A
Contact resistance	0.3 mΩ	0.4 mΩ	0.4 mΩ	0.3 mΩ
Multilam version	straight	twisted	twisted	straight
Withdrawal force	~ 5 N	~ 10 N	~ 10 N	~ 8 N
Upper temperature limit	+150°C	+150°C	+150°C	+150°C
Metal parts, plating	brass, gold-plated	brass, nickel-plated	brass, nickel-plated	brass, gold-plated
Connection	M3 thread	M3 thread	M3 thread	M3 internal thread
Order No.	**22.1055**	**22.1083**	**22.1084**	**22.1054**

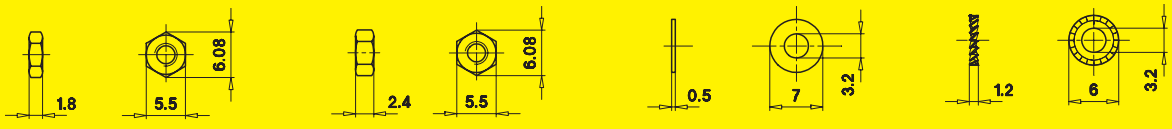

MU0,5D/M3
MU0,5D/M3N

MU0,8D/M3
MU0,8D/M3N

U/M3
U/M3N

FS/M3

Connection aids (are not supplied !)	nut **MU0,5D/M3**, DIN 439, brass, gold-plated, **Order No. 22.6605**	——
	nut **MU0,5D/M3N**, DIN 439, brass, nickel-plated, **Order No. 22.6606**	
	nut **MU0,8D/M3**, DIN 934, brass, gold-plated, **Order No. 22.6505**	
	nut **MU0,8D/M3N**, DIN 934, brass, nickel-plated, **Order No. 22.6522**	
	U-washer **U/M3**, DIN 125, brass, gold-plated, **Order No. 22.6507**	
	U-washer **U/M3N**, DIN 125, brass, nickel-plated, **Order No. 22.6523**	
	serrated lock washer **FS/M3**, DIN 6798, spring bronze, **Order No. 22.6532**	

*Colour code	**20**	**21**	**22**	**23**	**24**	**25**	**26**	**27**	**28**	**29**	**30**	**33**
	green-yellow	black	red	blue	yellow	green	violet	brown	grey	white	orange	transparent

ø 4 mm Multilam plugs with M4 screw connection in various versions.

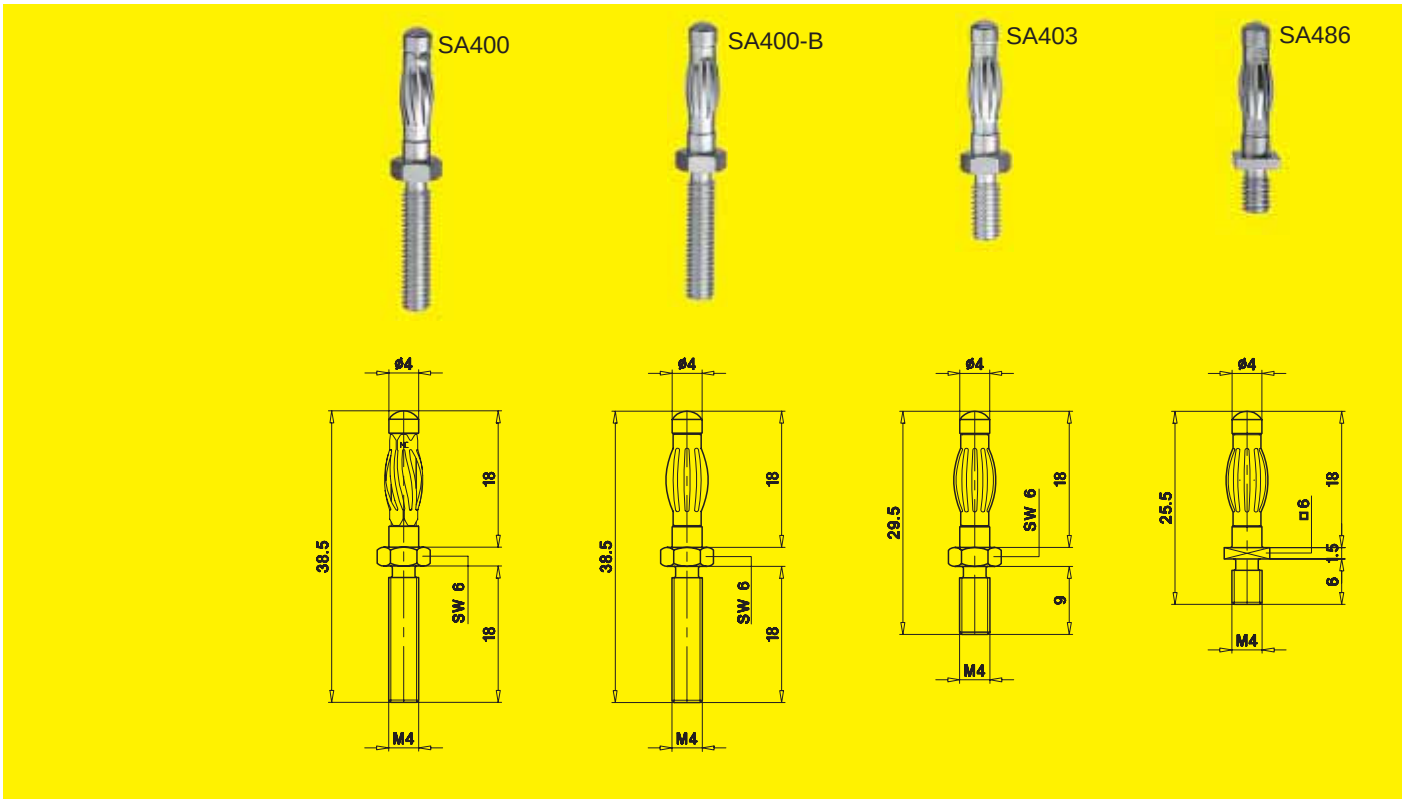

Type	SA400	SA400-B	SA403	SA486
Rated current (according to connecting method and cross section)	max. 50 A	max. 50 A	max. 50 A	max. 50 A
Contact resistance	0.2 mΩ	0.3 mΩ	0.3 mΩ	0.8 mΩ
Multilam version	twisted	straight	straight	straight
Withdrawal force	~ 10 N	~ 5 N	~ 5 N	~ 5 N
Upper temperature limit	+150°C	+150°C	+150°C	+150°C
Metal parts, plating	brass, gold-plated	brass, gold-plated	brass, gold-plated	brass, nickel-plated
Connection	M4 thread	M4 thread	M4 thread	M4 thread
	A	A	A	A
Order No.	**22.1050**	**22.1070**	**22.1053**	**22.1086**

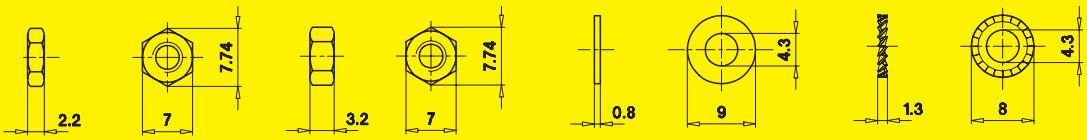

MU0,5D/M3 MU0,8D/M4 U/M4 FS/M4

Connection aids (are not supplied !)	nut **MU0,5D/M4**, DIN 439, brass, gold-plated, **Order No. 22.6609**
	nut **MU0,8D/M4**, DIN 934, brass, gold-plated, **Order No. 22.6509**
	U-washer **U/M4**, DIN 125, brass, gold-plated, **Order No. 22.6511**
	serrated lock washer **FS/M4**, DIN 6798, spring bronze, **Order No. 22.6533**

*Colour code	**20** green-yellow	**21** black	**22** red	**23** blue	**24** yellow	**25** green	**26** violet	**27** brown	**28** grey	**29** white	**30** orange	**33** transparent

ø 4 mm Multilam plugs with M5 screw connection in various versions.
In some cases also with additional solder connection.

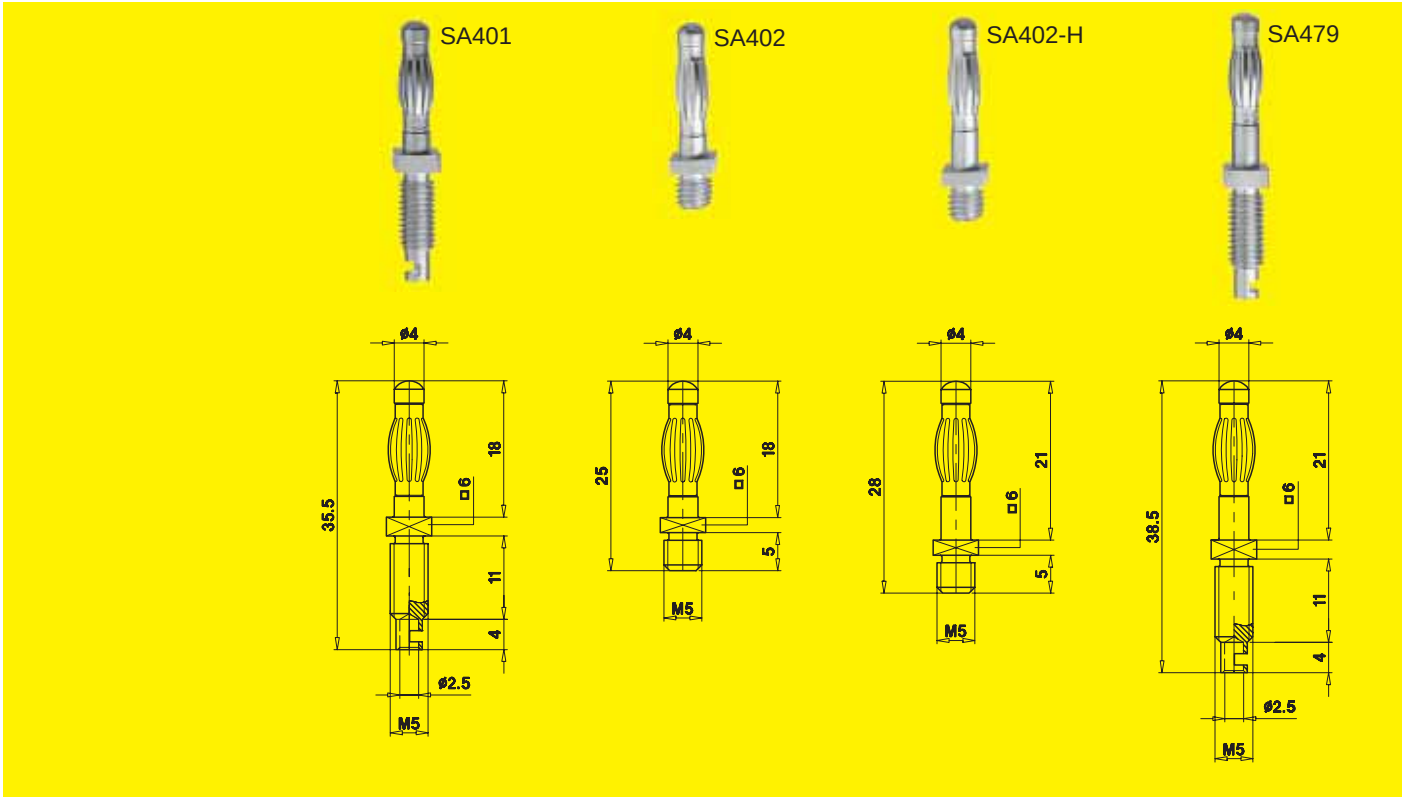

Type	SA401	SA402	SA402-H	SA479
Rated current (according to connecting method and cross section)	max. 50 A	max. 50 A	max. 50 A	max. 50 A
Contact resistance	0.3 mΩ	0.3 mΩ	0.3 mΩ	0.3 mΩ
Multilam version	straight	straight	straight	straight
Withdrawal force	~ 5 N	~ 5 N	~ 5 N	~ 5 N
Upper temperature limit	+150°C	+150°C	+150°C	+150°C
Metal parts, plating	brass, gold-plated	brass, gold-plated	brass, gold-plated	brass, gold-plated
Connection	M5 thread and solder connection	M5 thread	M5 thread	M5 thread and solder connection
	A	A	A	A
Order No.	**22.1051**	**22.1052**	**22.1075**	**22.6205**

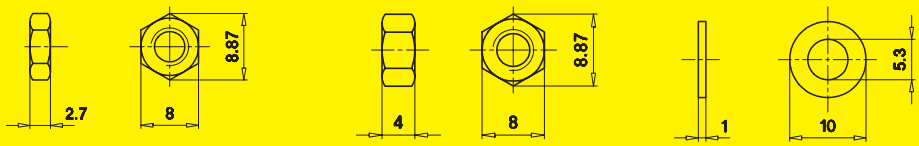

MU0,5D/M5 MU0,8D/M5 U/M5

Connection aids (are not supplied !)	nut **MU0,5D/M5**, DIN 439, brass, gold-plated, **Order No. 22.6613**
	nut **MU0,8D/M5**, DIN 934, brass, gold-plated, **Order No. 22.6513**
	U-washer **U/M5**, DIN 125, brass, gold-plated, **Order No. 22.6515**

*Colour code	**20**	**21**	**22**	**23**	**24**	**25**	**26**	**27**	**28**	**29**	**30**	**33**
	green-yellow	black	red	blue	yellow	green	violet	brown	grey	white	orange	transparent

ø 4 mm Multilam plugs in various versions.

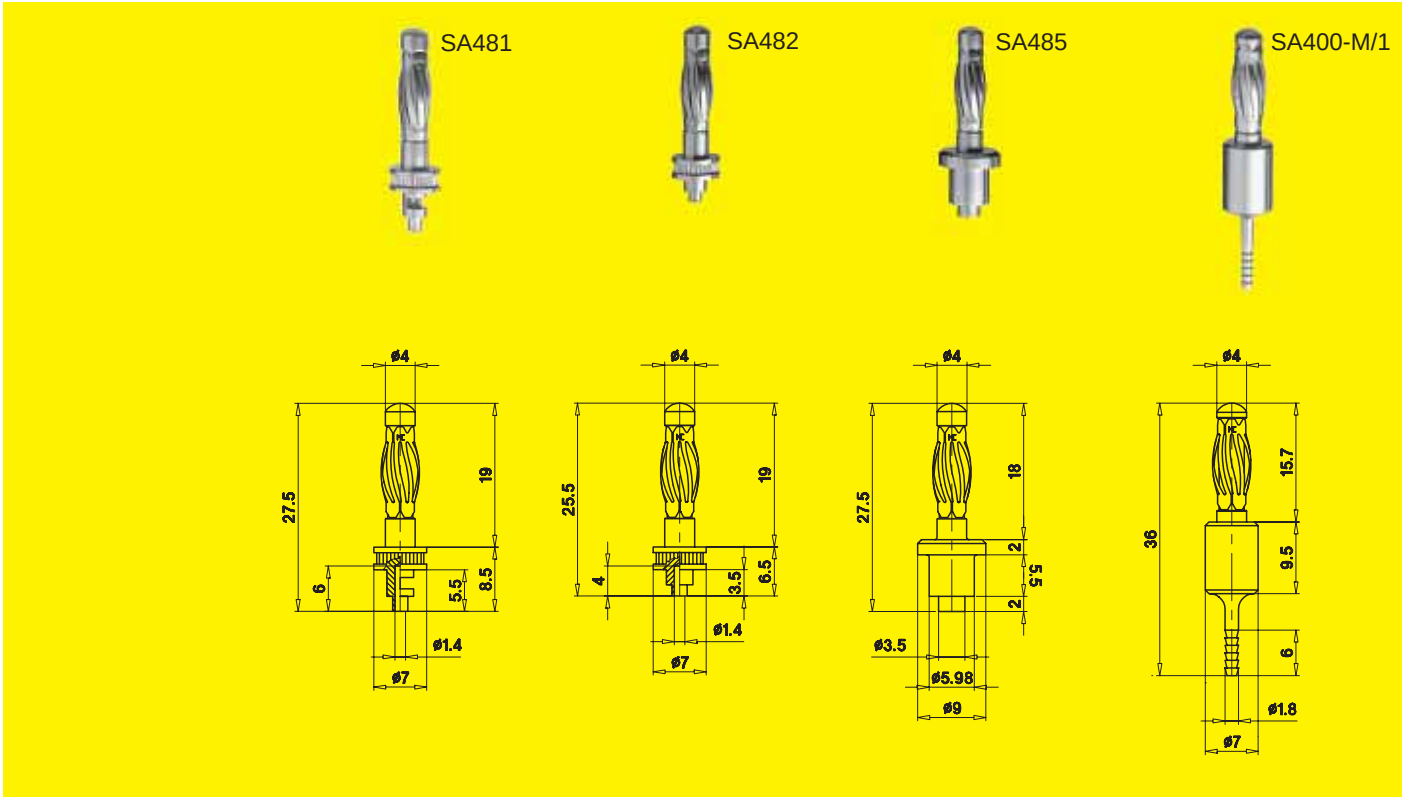

Type	SA481	SA482	SA485	SA400-M/1
Rated current (according to connecting method and cross section)	max. 50 A	max. 50 A	max. 50 A	max. 50 A
Contact resistance	0.4 mΩ	0.4 mΩ	0.4 mΩ	0.2 mΩ
Multilam version	twisted	twisted	twisted	twisted
Withdrawal force	~ 10 N	~ 10 N	~ 10 N	~ 10 N
Upper temperature limit	+150°C	+150°C	+150°C	+150°C
Metal parts, plating	brass, nickel-plated	brass, nickel-plated	brass, nickel-plated	brass, gold-plated
Connection	solder connection	solder connection	–	crimp connection
	A	A	A	A
Order No.	**22.1081**	**22.1082**	**22.1085**	**22.5146**

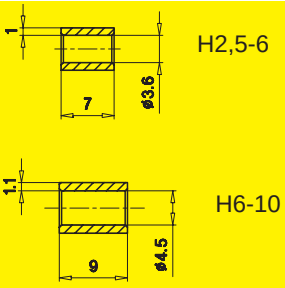

Crimp connectors (are not supplied !)	–	–	–	**H2,5-6**, copper, gold-plated, **Order No. 22.7150**
				H6-10, copper, gold-plated, **Order No. 22.7160**

*Colour code	**20** green-yellow	**21** black	**22** red	**23** blue	**24** yellow	**25** green	**26** violet	**27** brown	**28** grey	**29** white	**30** orange	**33** transparent

ø 4 mm Multilam plugs with solder connection in various versions.

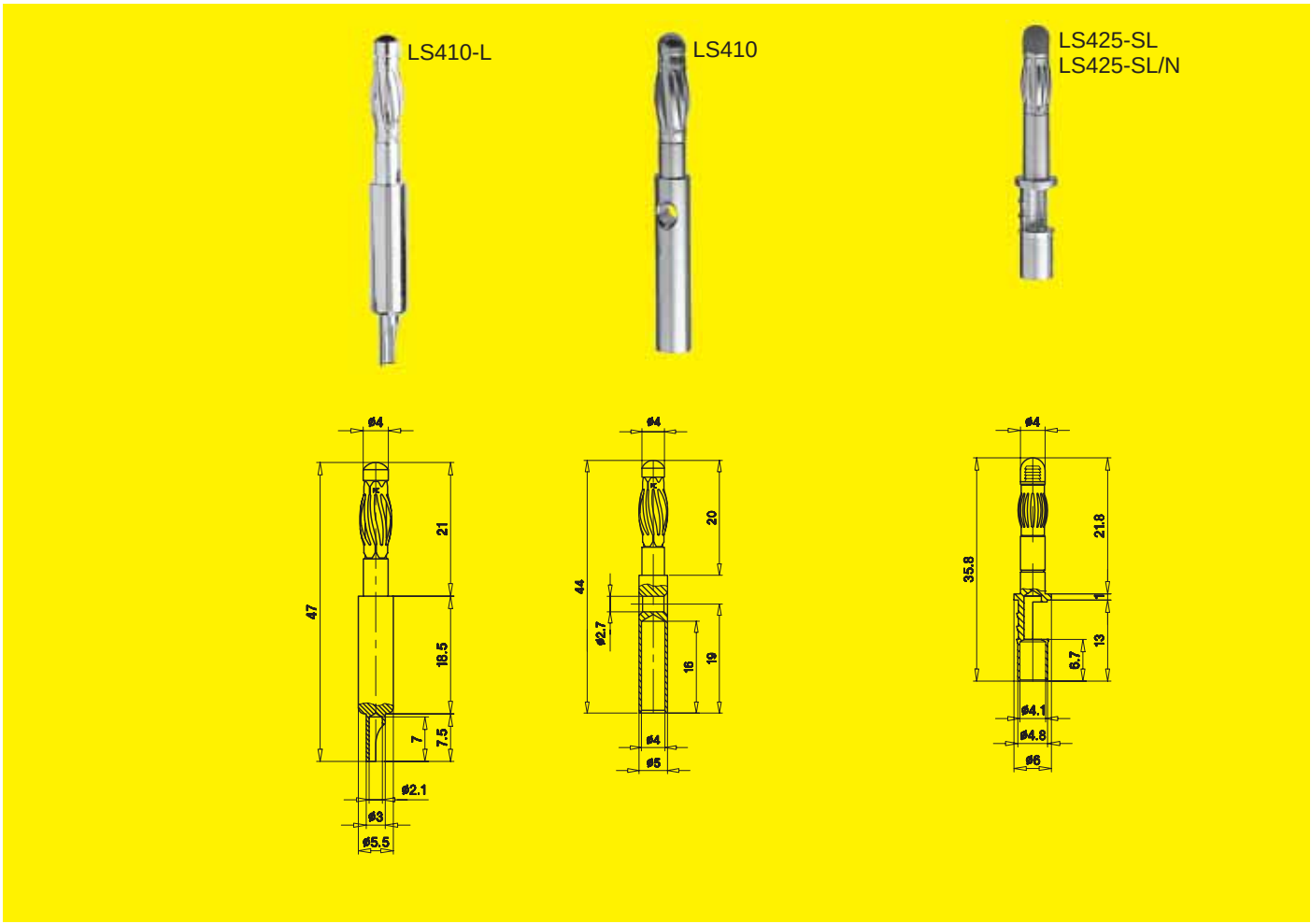

Type	LS410-L	LS410	LS425-SL	LS425-SL/N
Rated current (according to connecting method and cross section)	max. 50 A	max. 50 A	max. 50 A	max. 50 A
Contact resistance	0.2 mΩ	0.2 mΩ	0.3 mΩ	0.8 mΩ
Multilam version	twisted	twisted	straight	straight
Withdrawal force	~ 10 N	~ 10 N	~ 15 N	~ 15 N
Upper temperature limit	+150°C	+150°C	+150°C	+150°C
Metal parts, plating	brass, gold-plated	brass, gold-plated	brass, gold-plated	brass, nickel-plated
Connection	solder connection	solder connection, ø 4 mm rear socket	solder connection	solder connection
Order No.	**22.1011**	**22.1010**	**22.1025**	**22.1032**

Recommended mounting tool	–	–	crimping pliers **PZK3, Order No. 25.0018**

*Colour code	20	21	22	23	24	25	26	27	28	29	30	33
	green-yellow	black	red	blue	yellow	green	violet	brown	grey	white	orange	transparent

ø 4 mm Multilam plugs with solder connection in various versions.

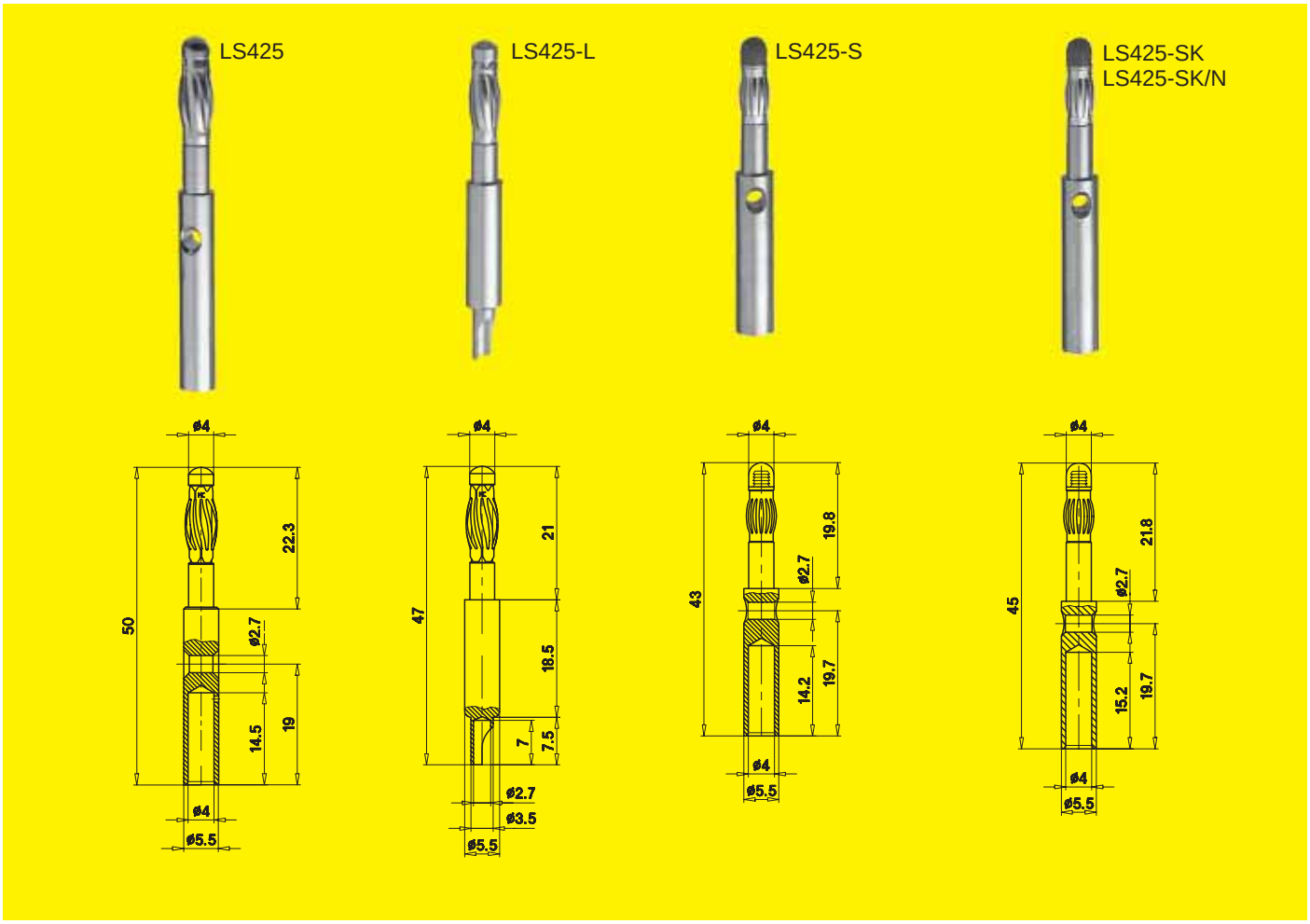

Type	LS425	LS425-L	LS425-S	LS425-SK	LS425-SK/N
Rated current (according to connecting method and cross section)	max. 50 A	max. 50 A	max. 50 A	max. 50 A	max. 50 A
Contact resistance	0.2 mΩ	0.2 mΩ	0.3 mΩ	0.3 mΩ	0.8 mΩ
Multilam version	twisted	twisted	straight	straight	straight
Withdrawal force	~ 10 N	~ 10 N	~ 15 N	~ 15 N	~ 15 N
Upper temperature limit	+150°C	+150°C	+150°C	+150°C	+150°C
Metal parts, plating	brass, gold-plated	brass, gold-plated	brass, gold-plated	brass, gold-plated	brass, nickel-plated
Connection	solder connection, ø 4 mm rear socket	solder connection	solder connection, ø 4 mm rear socket	solder connection, ø 4 mm rear socket	solder connection, ø 4 mm rear socket
	(A)	(A)	(A)	(A)	(A)
Order No.	**22.1000**	**22.1015**	**22.1020**	**22.1022**	**22.6242**

*Colour code	**20**	**21**	**22**	**23**	**24**	**25**	**26**	**27**	**28**	**29**	**30**	**33**
	green-yellow	black	red	blue	yellow	green	violet	brown	grey	white	orange	transparent

ø 4 mm Multilam plugs in various versions.

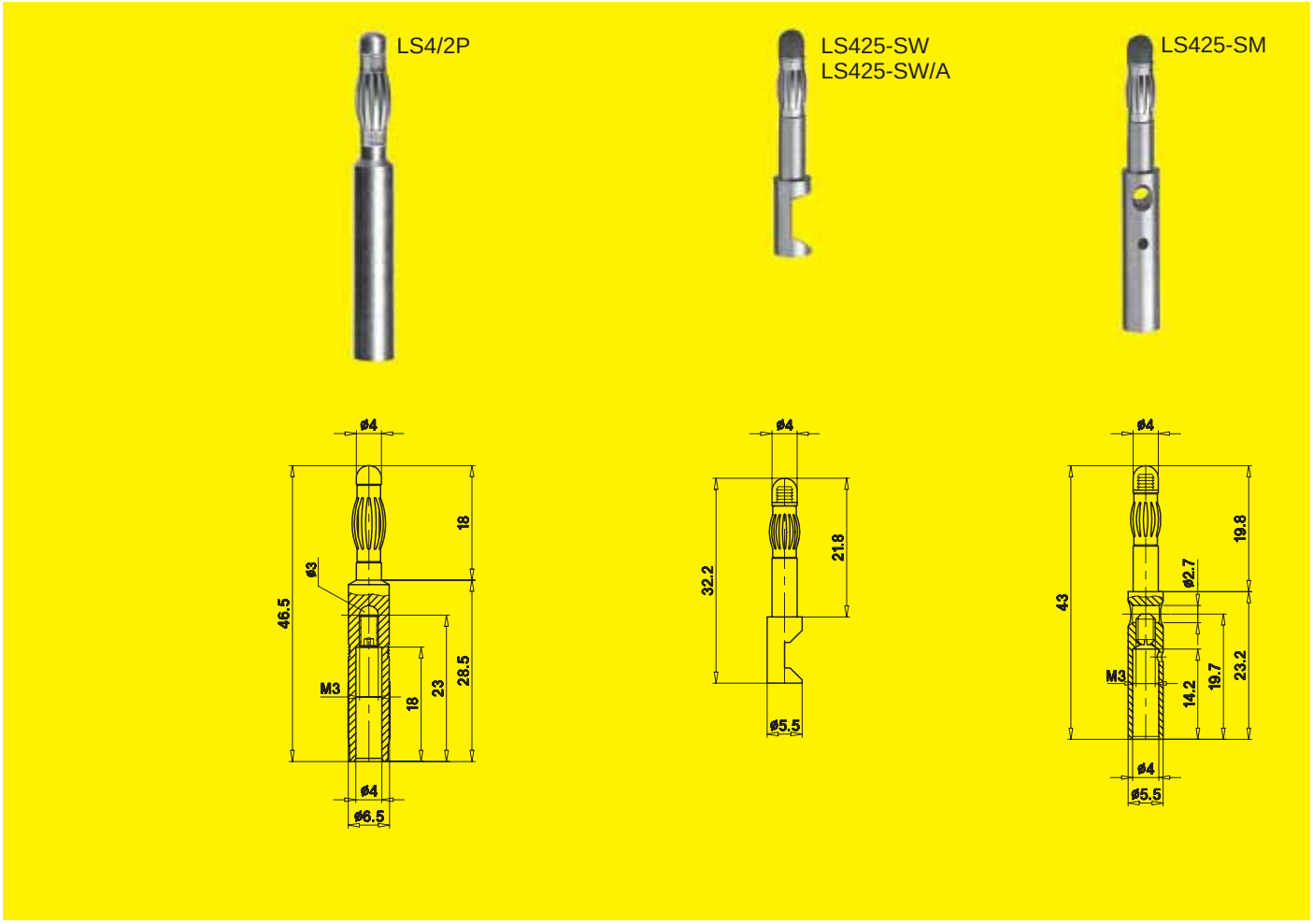

Type	LS4/2P	LS425-SW	LS425-SW/A	LS425-SM
Rated current (according to connecting method and cross section)	max. 50 A	max. 50 A	max. 50 A	max. 50 A
Contact resistance	0.3 mΩ	0.8 mΩ	0.3 mΩ	0.3 mΩ
Multilam version	straight	straight	straight	straight
Withdrawal force	~ 5 N	~ 15 N	~ 15 N	~ 15 N
Upper temperature limit	+150°C	+150°C	+150°C	+150°C
Metal parts, plating	brass, gold-plated	brass, nickel-plated	brass, gold-plated	brass, gold-plated
Connection	M3 threaded pin, ø 4 mm rear socket	solder connection	solder connection	M3 threaded pin, solder connection, ø 4 mm rear socket
Order No.	**22.1026**	**22.1042**	**22.1045**	**22.1021**

*Colour code	20	21	22	23	24	25	26	27	28	29	30	33
	green-yellow	black	red	blue	yellow	green	violet	brown	grey	white	orange	transparent

ø 4 mm Multilam plugs in various versions.

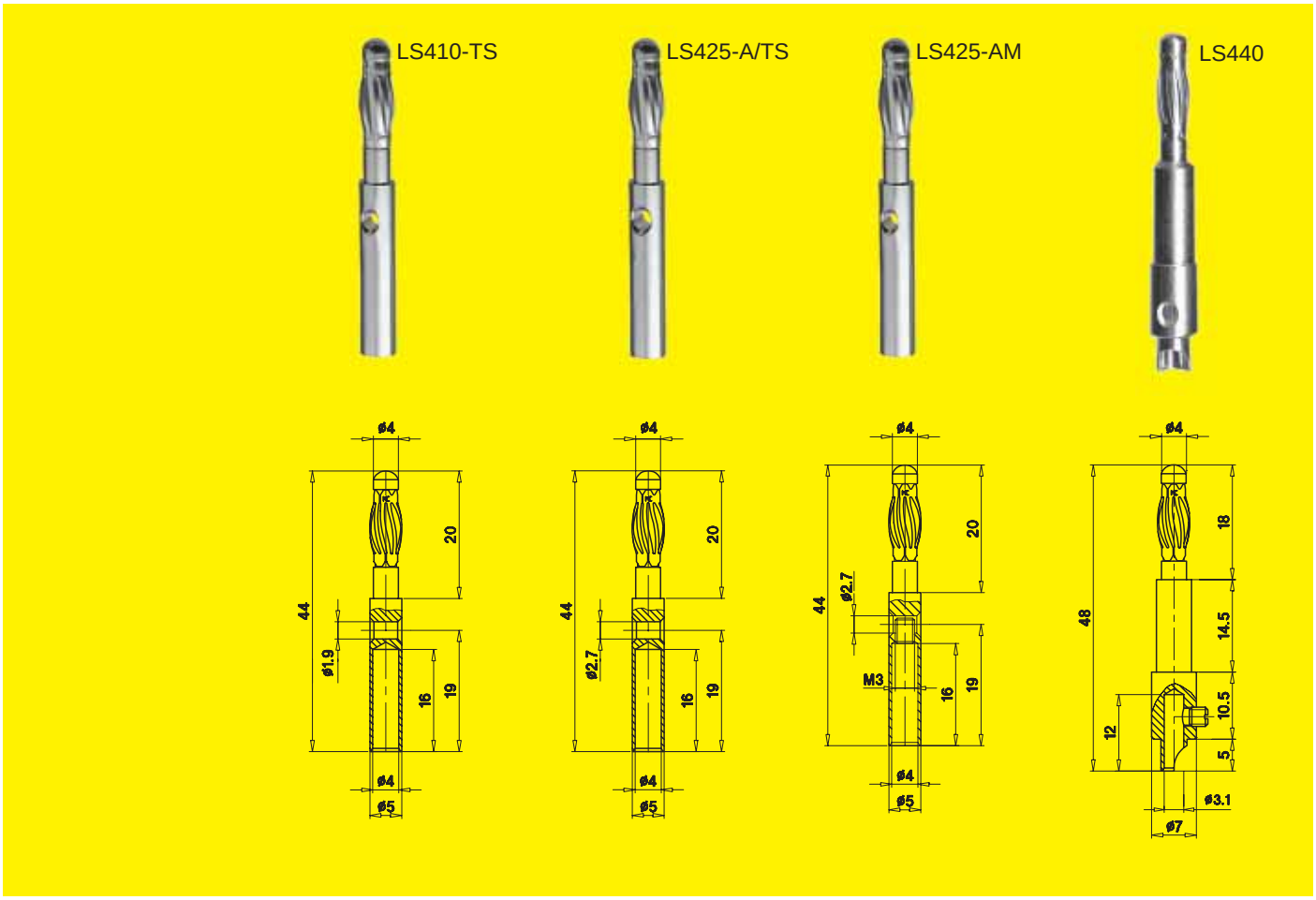

Type	LS410-TS	LS425-A/TS	LS425-AM	LS440
Rated current (according to connecting method and cross section)	max. 50 A	max. 50 A	max. 50 A	max. 50 A
Contact resistance	0.2 mΩ	0.2 mΩ	0.2 mΩ	0.2 mΩ
Multilam version	twisted	twisted	twisted	twisted
Withdrawal force	~ 10 N	~ 10 N	~ 10 N	~ 10 N
Upper temperature limit	+150°C	+150°C	+150°C	+150°C
Metal parts, plating	copper / tellurium, 1 µm gold-plated, without interlayer	copper / tellurium, 1 µm gold-plated, without interlayer	brass, gold-plated	brass, gold-plated
Connection	solder connection, ø 4 mm rear socket	solder connection, ø 4 mm rear socket	M3 internal thread, solder connection, ø 4 mm rear socket	screw connection (Hi-Fi plug)
	(A)	(A)	(A)	(A)
Order No.	**22.1013**	**22.1018**	**22.1028**	**49.2000**

Suitable insulation	–	–	–	**T-POAG6** Standard colours*: 21, 22, 33 **Order No. 15.5004**

*Colour code	**20** green-yellow	**21** black	**22** red	**23** blue	**24** yellow	**25** green	**26** violet	**27** brown	**28** grey	**29** white	**30** orange	**33** transparent

ø 4 mm Multilam plugs for loudspeakers.

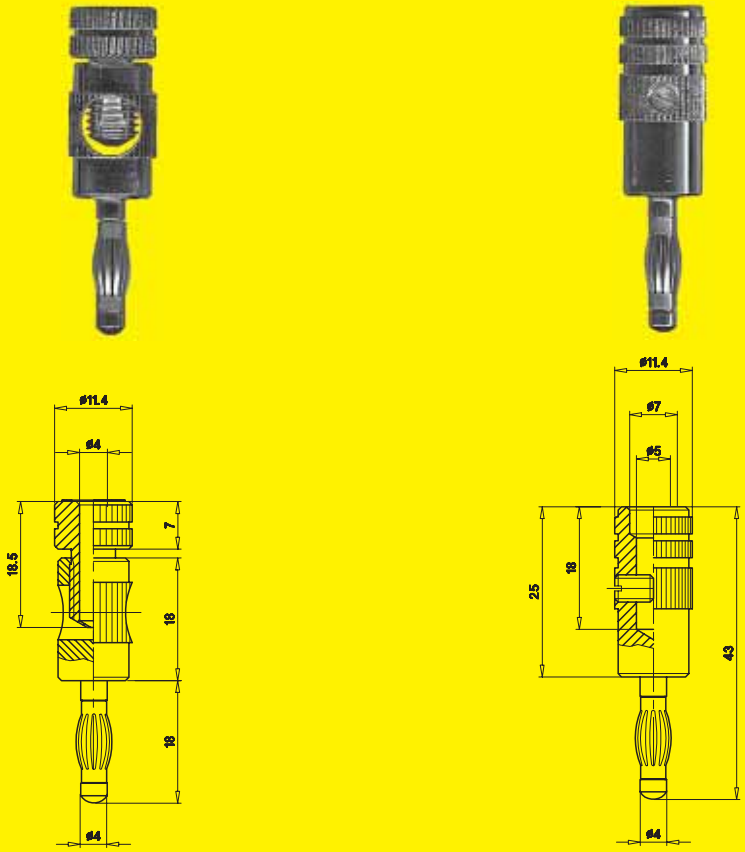

Type	ASTV4-AS	ASTV4-AH
Rated current (according to connecting method and cross section)	max. 50 A	max. 50 A
Contact resistance	0.3 mΩ	0.3 mΩ
Multilam version	straight	straight
Withdrawal force	~ 10 N	~ 10 N
Upper temperature limit	+150°C	+150°C
Metal parts, plating	brass, gold-plated	brass, gold-plated
Connection	screw connection	screw connection
		
Standard colours*	21 - 22	21 - 22
Order No.	**22.3013-***	**22.3012-***

*Colour code	20	21	22	23	24	25	26	27	28	29	30	33
	green-yellow	black	red	blue	yellow	green	violet	brown	grey	white	orange	transparent

PP-130, PP-140:
Test probes with ground stainless steel tip which can pierce thin insulation and oxide layers. The insulation can be cut back to bare a suitable length of tip. The test probes feature an anti-roll finger guard. ø 4 mm socket in handle for accepting spring-loaded ø 4 mm plugs.

MGA-4:
Test probe with replaceable ø 1 mm steel tip for accepting spring-loaded ø 4 mm plugs (e.g. suitable for connecting leads FML and SML).

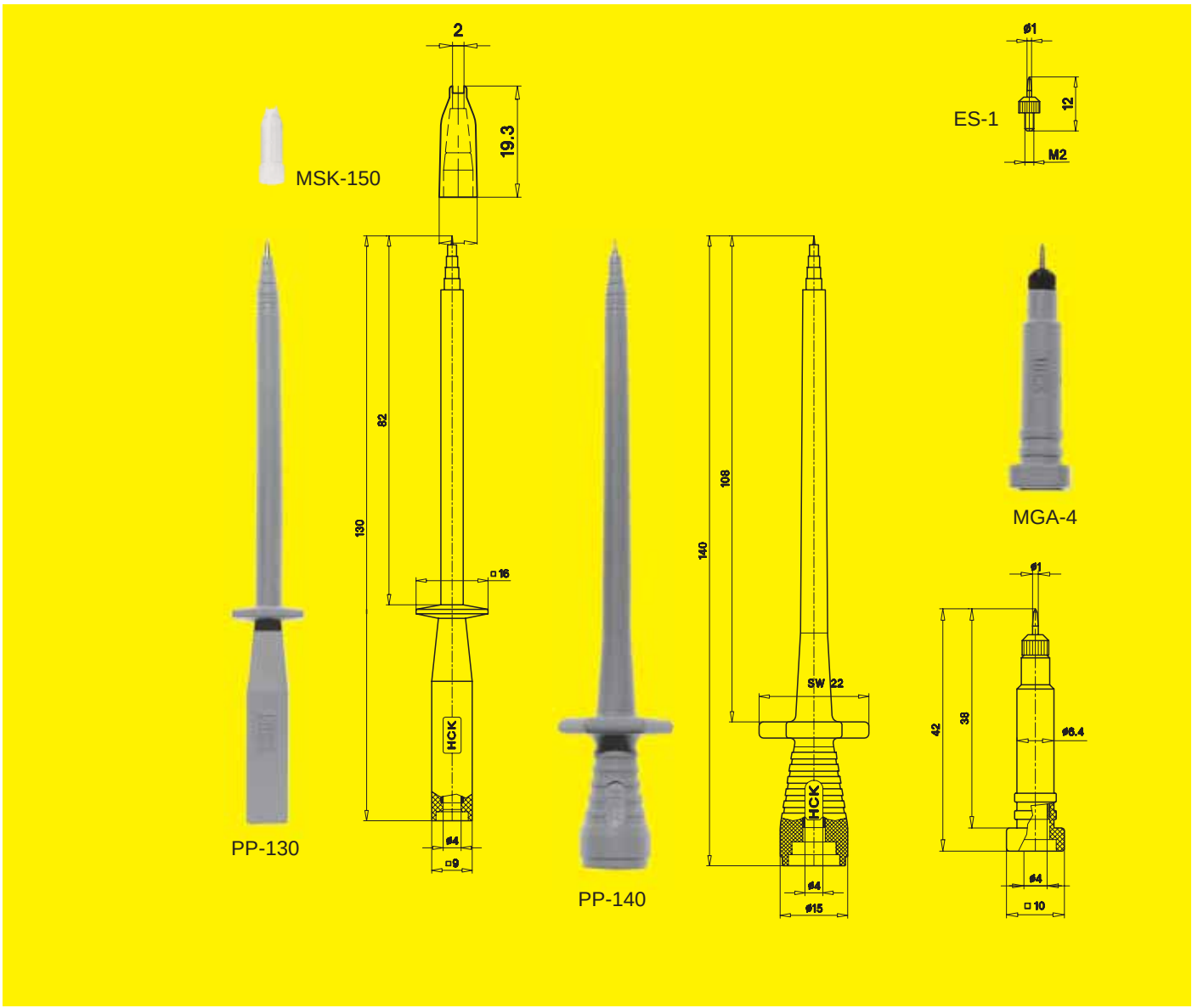

Type	PP-130	PP-140	MGA-4
Rated current	–	–	1 A
Insulation	TPE	TPE	PA
Operating temperature	-40°C ... +80°C	-40°C ... +80°C	-40°C ... +80°C
Tip	stainless steel needle, ground to a sharp point	stainless steel needle, ground to a sharp point	ø 1 mm steel tip, replaceable
Standard colours*	21 - 26	21 - 23	21 - 26
			-Ⓐ-
Order No.	**64.9205-***	**64.9206-***	**64.9740-***

Protective cap	**MSK-150, Order No. 66.9107-33** Material: PE, transparent	–
Replaceable tip	–	**ES-1, Order No. 66.9620** stainless steel, tip length: 4 mm

*Colour code	**20** green-yellow	**21** black	**22** red	**23** blue	**24** yellow	**25** green	**26** violet	**27** brown	**28** grey	**29** white	**30** orange	**33** transparent

Test Clips with ø 4 mm sockets for accepting ø 4 mm test leads or any other ø 4 mm Multilam plug. Insulated and uninsulated models.

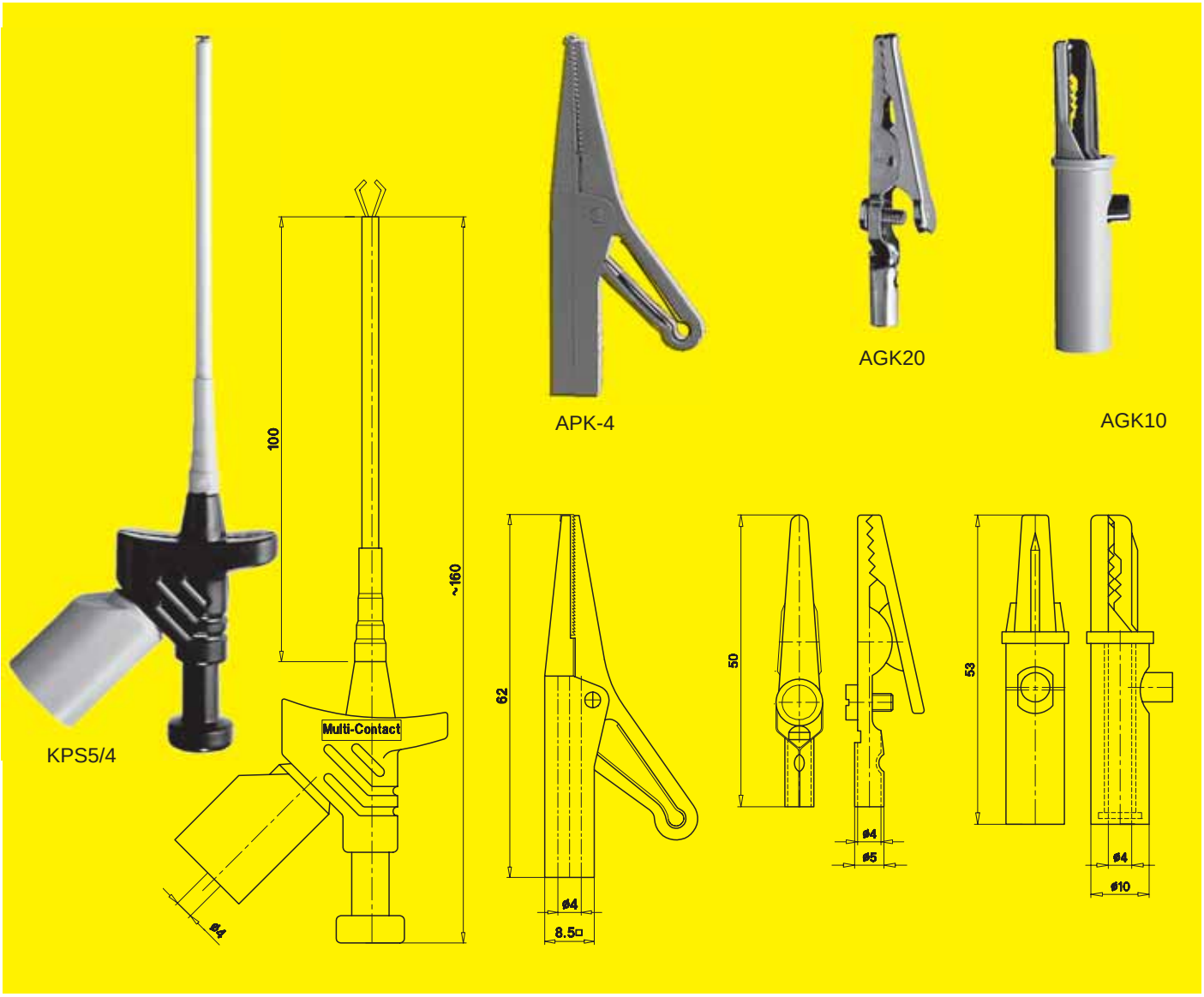

Type	KPS5/4	APK-4	AGK20	AGK10
Rated voltage	300 V, CAT II	–	–	–
Rated current	–	max. 2 A	10 A	6 A
Design	insulated test clip with revolving grabber in a flexible shaft, can be operated with one hand	sharp toothed, pointed jaws (the upper jaw is insulated)	crocodile clip, not insulated, connection also possible with screw clamp or soldering	crocodile clip, fully insulated, with fine-wire gripping surface
Insulation	handle: Duroplast; shaft: shrinkable tubing	PA, glass fibre reinforced	–	PS
Operating temperature	-10°C ... +60°C	-40°C ... +80°C	–	-25°C ... +60°C
Metal parts, plating	brass, unplated	brass, nickel-plated	steel, nickel-plated	brass, tin-plated
Clamping limit	3.5 mm	max. 12 mm	max. 5 mm	max. 6 mm
	ϟ	-Ⓐ-	-Ⓐ-	-Ⓐ-
Standard colours*	21 - 22	21 - 26	–	21 - 25
Order No.	**24.0220-***	**64.9209-***	**24.0149**	**24.0155-***

*Colour code	**20** green-yellow	**21** black	**22** red	**23** blue	**24** yellow	**25** green	**26** violet	**27** brown	**28** grey	**29** white	**30** orange	**33** transparent

Test clips with ø 4 mm socket in handle for accepting ø 4 mm test leads or any other ø 4 mm Multilam plug.

MINIGRIP-4/A:
With rigid sprung hook for reliable contact to wires and pins.

MINIGRIP-4/CI:
With steel jaws especially for connections to ground rails and thick cables. For increased safety when making connections, the jaws are insulated on the outside.

MINIGRIP-4/B-50 and **MINIGRIP-4/B-100:**
Test clips with flexible shaft and spring wire grabber for a good contact to pins and wires in inaccessible places. Especially suitable for measuring voltages.
The shaft is Silicone insulated and guarantees good heat resistance and flexibility even at low temperatures.
Various shaft lengths available.

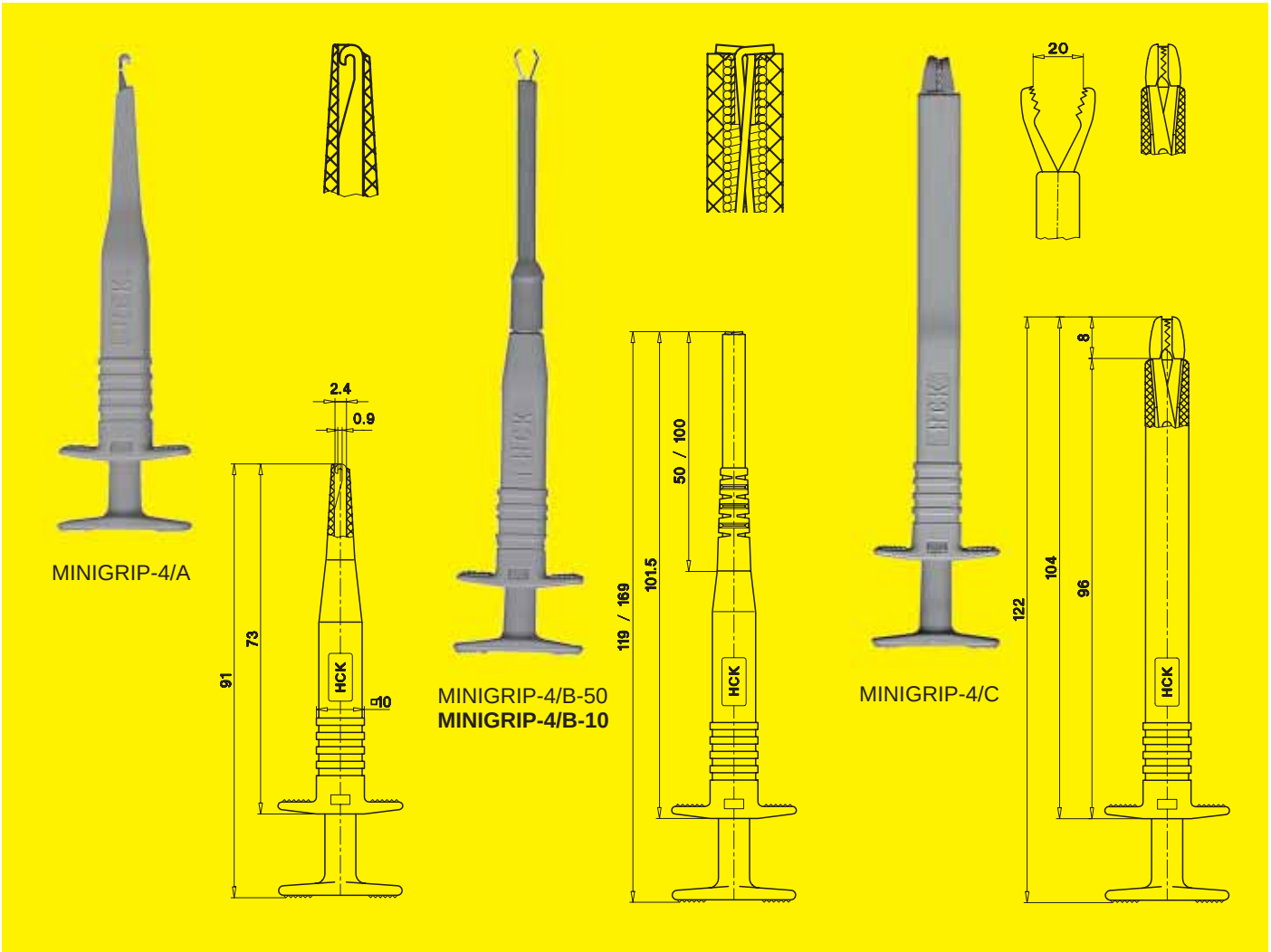

Type	MINIGRIP-4/A	MINIGRIP-4/B-50	MINIGRIP-4/B-100	MINIGRIP-4/CI
Rated current	3 A	1 A	1 A	16 A
Design	rigid hook clip	spring wire grabber in flexible, insulated shaft (shaft length: 50 mm)	spring wire grabber in flexible, insulated shaft (shaft length: 100 mm)	jaws insulated on outside
Insulation	PA	handle: PA shaft: Silicon	handle: PA shaft: Silicon	PA
Operating temperature	-40°C ... +80°C	handle: -40°C ... +80°C shaft: -80°C ... +150°C	handle: -40°C ... +80°C shaft: -80°C ... +150°C	-40°C ... +80°C
Metal parts, plating of the test clips	steel, nickel-plated	spring wire, stainless steel	spring wire, stainless steel	steel, nickel-plated
Clamping limit	1 mm	max. approx. 5 mm	max. approx. 5 mm	see sketch
	-Ⓐ-	-Ⓐ-	-Ⓐ-	=Ⓐ=
Standard colours*	21 - 23	21 - 23	21 - 23	21 - 23
Order No.	**64.9741-***	**64.9742-***	**64.9743-***	**64.9745-***

*Colour code	**20** green-yellow	**21** black	**22** red	**23** blue	**24** yellow	**25** green	**26** violet	**27** brown	**28** grey	**29** white	**30** orange	**33** transparent

Highly flexible adapter lead. One end with axial ø 4 mm safety socket,
the other end with probe adapter, suitable for all PMK Hybrid probes.

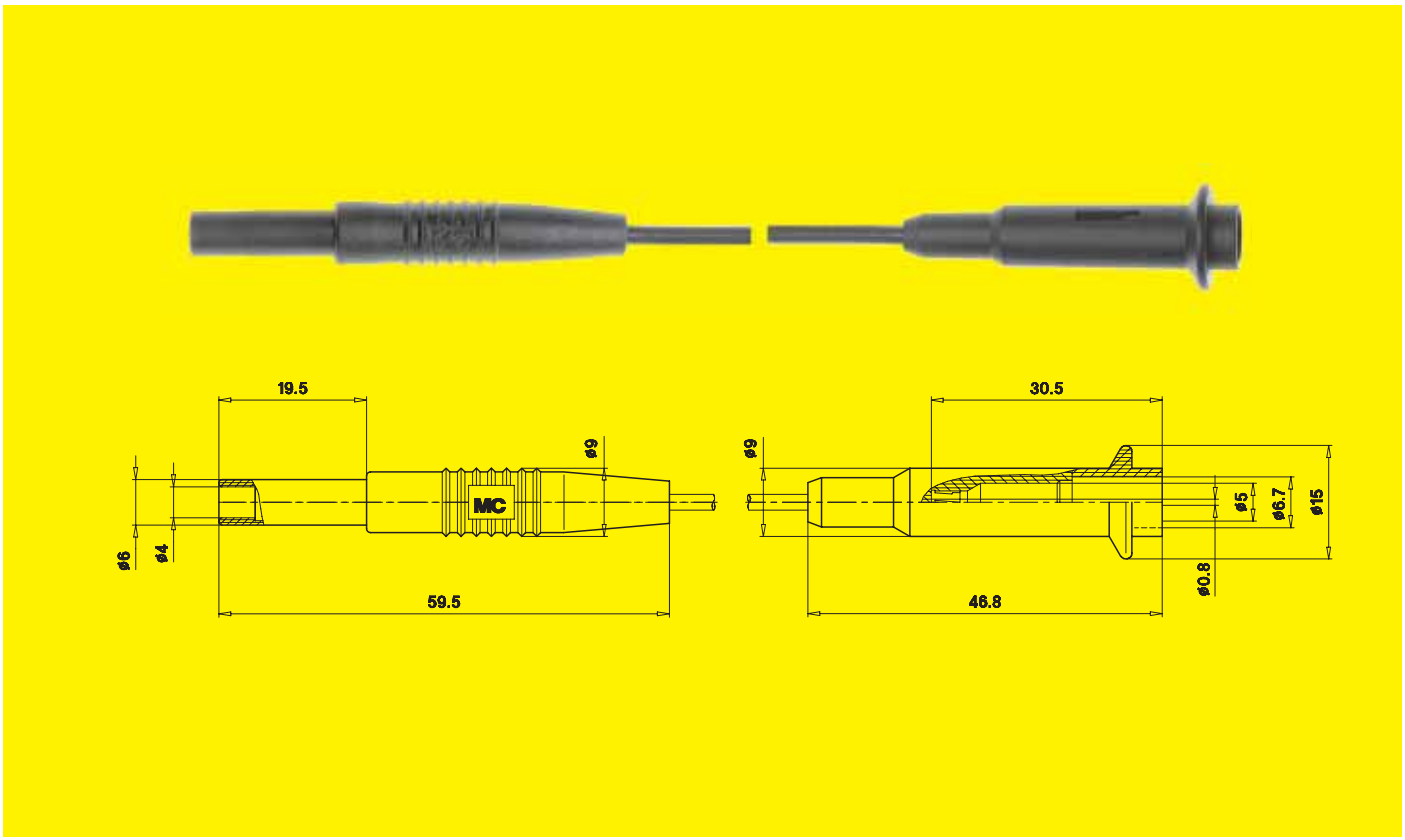

Type	AK410-BK/TK
	This adapter lead can only be used at a rated voltage of 30 V_{AC} / 60 V_{DC} !
Lead cross section	1.0 mm²
Lead insulation	PVC
Operating temperature	-10°C ... +70°C
Insulation adapters / sockets	PVC / PA
Metal parts, plating	brass, gold-plated
Terminal	probe adapter, suitable for all PMK Hybrid probes, but not the HCK-Isoprobe® !
Standard colour*	black
Standard length	4 cm
Order No.	**28.0003-00421**

	Not available as separate parts !
Consult supplementary label !	RZ 002

*Colour code	20	21	22	23	24	25	26	27	28	29	30	33
	green-yellow	black	red	blue	yellow	green	violet	brown	grey	white	orange	transparent

Adapters for special connections. ø 4 mm safety socket for accepting ø 4 mm safety test leads or any other ø 4 mm Multilam plug.

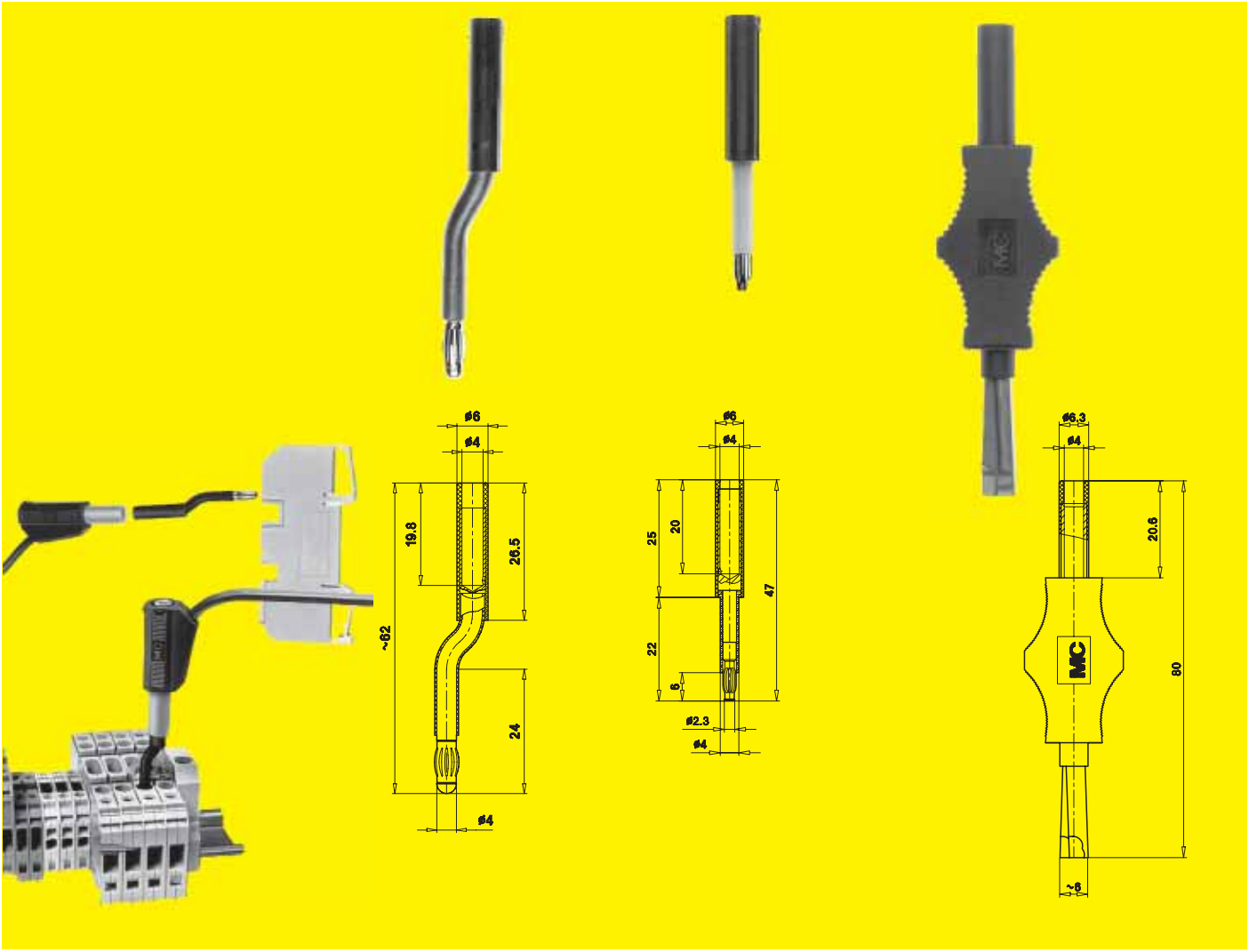

Type	A-SLK4-RG	PS2,3	SPPK4
Rated voltage	These adapters – even in conjunction with safety test leads – can only be used at a rated voltage of 30 V_{AC} / 60 V_{DC} !		
Rated current	25 A	25 A	6 A
Contact resistance	–	0.6 mΩ	–
Function	with ø 4 mm Multilam plug and socket for connecting into rail mounted terminals	test plug, suitable for installation terminals with M3 thread.	adapter with double blades for contacting slotted-head screw. Tensioned by combined pressing-pushing movement of handling part
Insulation	PA and shrinkable tubing	PA	PA
Operating temperature	-40°C ... +80°C	-40°C ... +80°C	-40°C ... +80°C
Metal parts, plating	brass, nickel-plated	ø 2.3 mm plug with Multilam, brass, silver-plated	socket: brass, nickel-plated blades: special spring steel
Standard colours*	black	21 - 22	black
Order No.	**24.0164-21**	**24.0100-***	**24.0240-21**

Consult supplementary label !	RZ 002	RZ 002	RZ 002

*Colour code	**20** green-yellow	**21** black	**22** red	**23** blue	**24** yellow	**25** green	**26** violet	**27** brown	**28** grey	**29** white	**30** orange	**33** transparent

Screw-in adapters for accepting connecting leads with ø 4 mm spring-loaded plugs. The external thread allows screw-fitting into threaded holes.
The metal socket has an internal slot for mounting purposes.



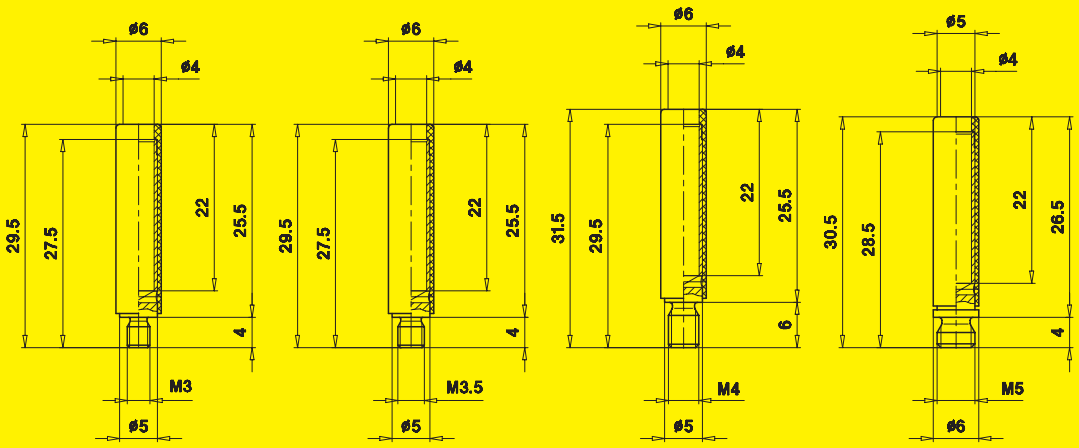

Type	B4-E-M3-I	B4-E-M3,5-I	B4-E-M4-I	B4-E-M5-I
Rated voltage	1000 V, CAT II	1000 V, CAT II	1000 V, CAT II	30 V_{AC} / 60 V_{DC} !
	Only for use with safety leads ! During installation, the terminal must not be connected to the supply !			
Rated current	32 A	32 A	32 A	32 A
Insulation	PA	PA	PA	PA
Operating temperature	-40°C ... +80°C	-40°C ... +80°C	-40°C ... +80°C	-40°C ... +80°C
Metal parts, plating	brass, nickel-plated	brass, nickel-plated	brass, nickel-plated	brass, nickel-plated
Screw connection	M3 external thread	M3.5 external thread	M4 external thread	M5 external thread
Suitable screwdriver	for internal slot, see sketch	for internal slot, see sketch	for internal slot, see sketch	for internal slot, see sketch
Standard colours*	21 - 24	21 - 24	21 - 24	21 - 24
Order No.	**23.1031-***	**23.1032-***	**23.1033-***	**23.1034-***

Parts list / tools

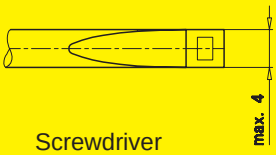

Screwdriver



I-A2/4



B4-E-IM ..

Insulation	**I-A2/4 24.5012-***	**I-A2/4 24.5012-***	**I-A2/4 24.5012-***	**I-A2/4 24.5012-***
Adapter without insulation	**B4-E-M3 23.5076**	**B4-E-M3,5 23.5079**	**B4-E-M4 23.5082**	**B4-E-M5 23.5085**
Consult supplementary label !	RZ 010	RZ 010	RZ 010	RZ 002

*Colour code	**20** green-yellow	**21** black	**22** red	**23** blue	**24** yellow	**25** green	**26** violet	**27** brown	**28** grey	**29** white	**30** orange	**33** transparent

Screw-on adapters for accepting connecting leads with ø 4 mm spring-loaded plugs. The internal thread allows these adapters to be screwed onto protruding threaded studs.
The metal socket has a slotted head for mounting purposes.

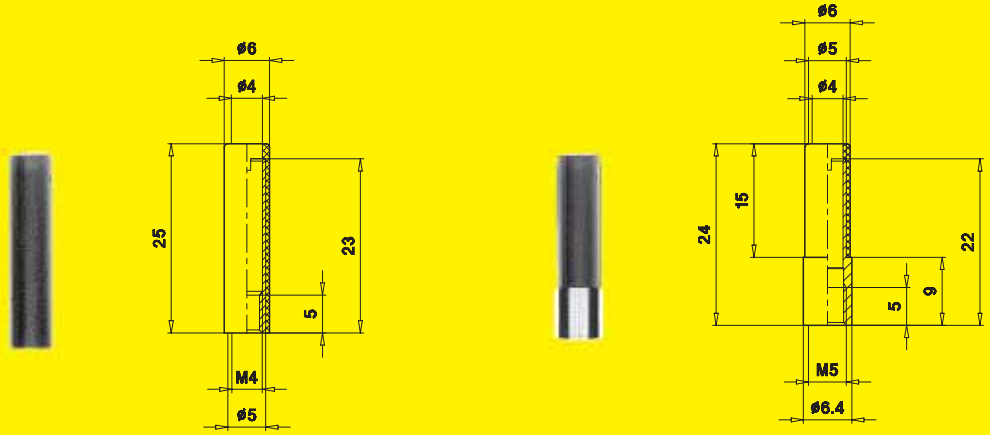

Type	B4-E-IM4-I	B4-E-IM5-I
Rated voltage	1000 V, CAT II (Only for use with safety leads !)	30 V_{AC} / 60 V_{DC} !
	During installation, the terminal must not be connected to the supply !	
Rated current	32 A	32 A
Insulation	PA	PA
Operating temperature	-40°C ... +80°C	-40°C ... +80°C
Metal parts, plating	brass, nickel-plated	brass, nickel-plated
Screw connection	M4 internal thread	M5 internal thread
Suitable screwdriver	suitable for slotted head, see sketch	suitable for slotted head, see sketch
		
Standard colours*	21 - 24	21 - 24
Order No.	**23.1035-***	**23.1036-***

Parts list / tools

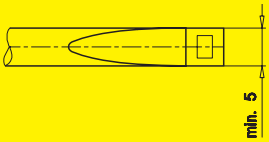

Screwdriver



Insulation



Adapter without insulation

Insulation	**I-A2/4 24.5012-***	**I-KK2/2 24.5090-***
Adapter without insulation	**B4-E-IM4 23.5088**	**B4-E-IM5 23.5091**
Consult supple-mentary label ! 	RZ 010	RZ 002

*Colour code	**20** green-yellow	**21** black	**22** red	**23** blue	**24** yellow	**25** green	**26** violet	**27** brown	**28** grey	**29** white	**30** orange	**33** transparent

Screw-in adapters for accepting connecting leads with ø 4 mm spring-loaded plugs. The external thread allows screw-fitting into threaded holes.

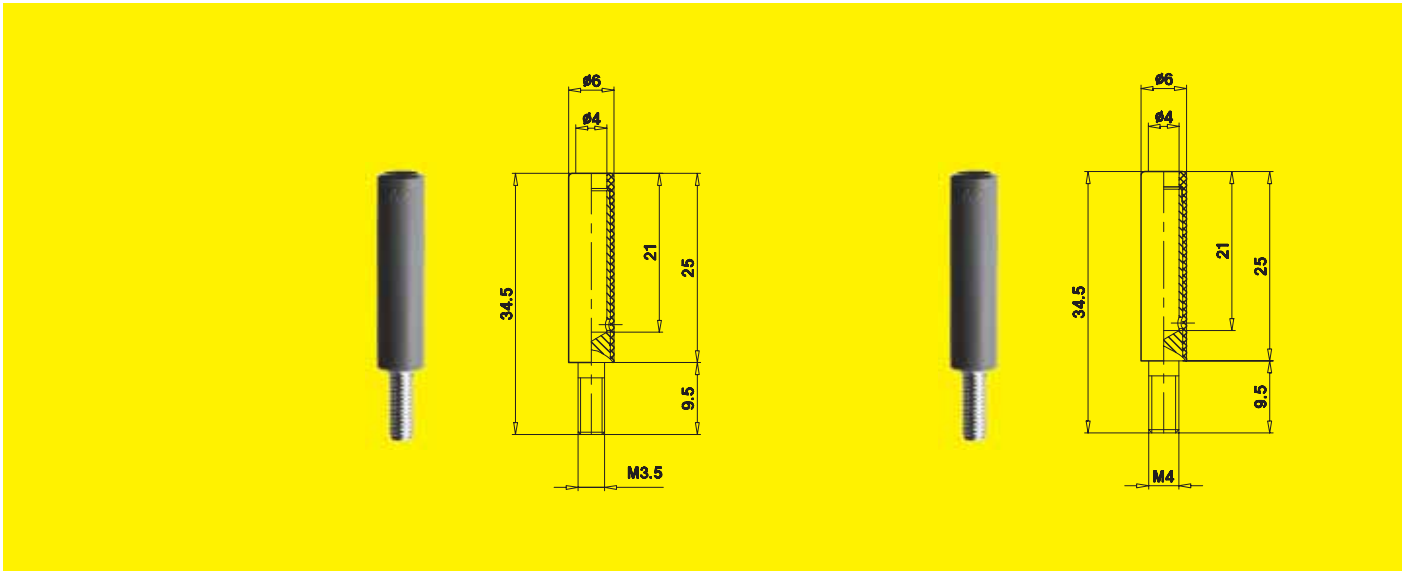

Type	LB4-G/M3,5	LB4-G/M4
Rated voltage	1000 V, CAT II	1000 V, CAT II
	Only for use with safety leads ! During installation, the terminal must not be connected to the supply !	
Rated current	32 A	32 A
Insulation	PA	PA
Operating temperature	-40°C ... +80°C	-40°C ... +80°C
Metal parts, plating	machined brass, nickel-plated	machined brass, nickel-plated
Screw connection	M3.5 external thread	M4 external thread
Standard colours*	21 - 24	21 - 24
Order No.	**23.0270-***	**23.0280-***

Consult supplementary label !	RZ 010	RZ 010

*Colour code	**20** green-yellow	**21** black	**22** red	**23** blue	**24** yellow	**25** green	**26** violet	**27** brown	**28** grey	**29** white	**30** orange	**33** transparent

Two-pole test adapters with rigid ø 4 mm socket to accept spring-loaded ø 4 mm plugs, for connecting instrument test leads or for feed-in connections, e.g. for measuring the current consumption of connected equipment or for determining leakage currents in automotive electrical systems without the need to open a lead in an inaccessible location. The adapter is inserted in place of the fuse. Available in various versions.

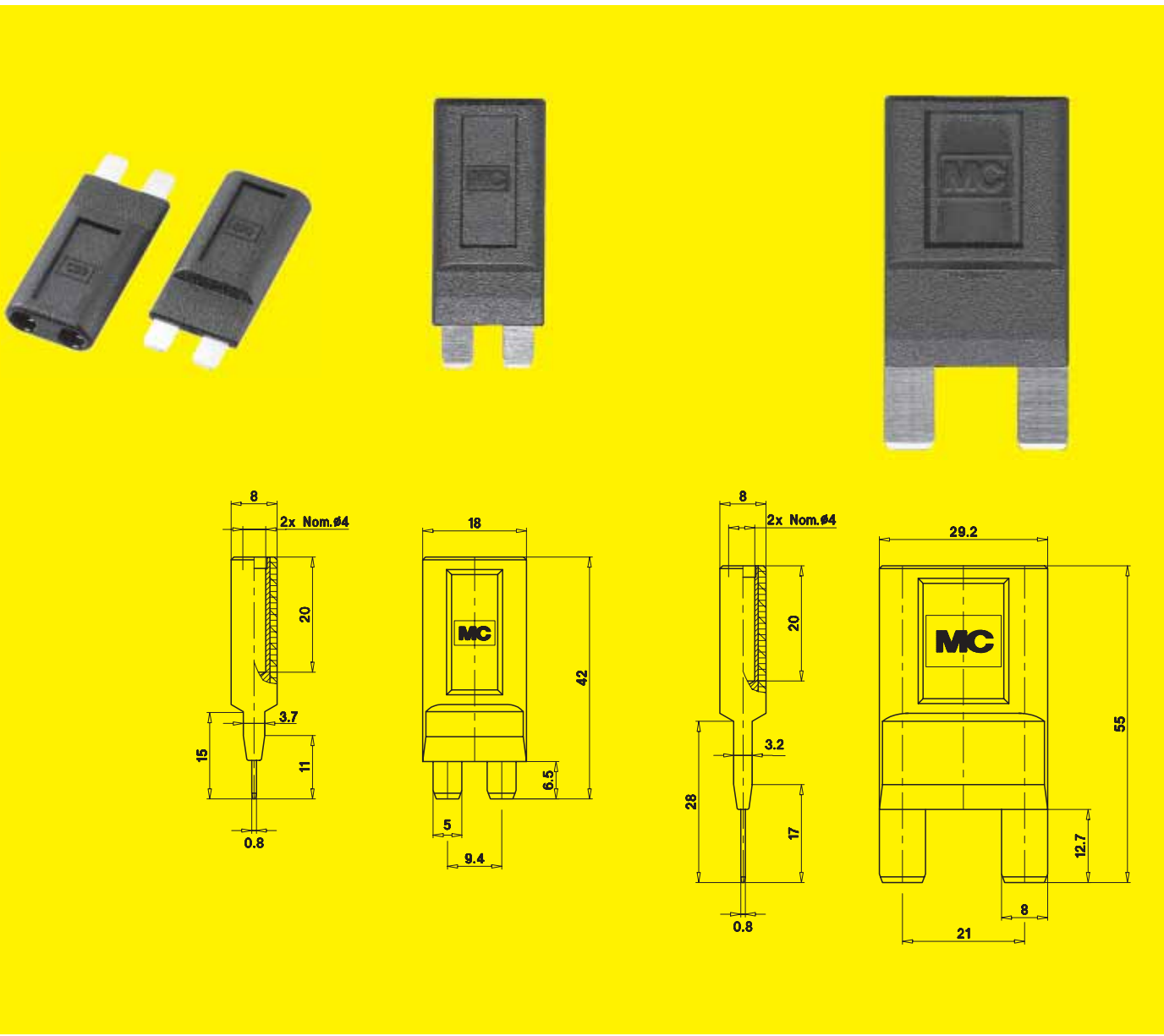

Type	PA2-5x0,65/B4	PA2-8x0,8/B4
Insulation	ABS	ABS
Operating temperature	-10°C ... +70°C	-10°C ... +70°C
Metal parts, plating	brass, nickel-plated	brass, nickel-plated
Connections	flat connecting tab 5 mm x 0.65 mm and rigid ø 4 mm socket at rear	flat connecting tab 8 mm x 0.8 mm and rigid ø 4 mm socket at rear
Plug spacing	9.4 mm	21 mm
Standard colours*	black	black
Order No.	**24.0522-21**	**24.0523-21**

*Colour code	**20** green-yellow	**21** black	**22** red	**23** blue	**24** yellow	**25** green	**26** violet	**27** brown	**28** grey	**29** white	**30** orange	**33** transparent

KLS4:
Spring-loaded ø 4 mm plug for clamp-connecting stranded wires.

KP4-2P/19:
Two-pole component holder with ø 4 mm spring-loaded plugs. Standard ø 4 mm sockets at rear.





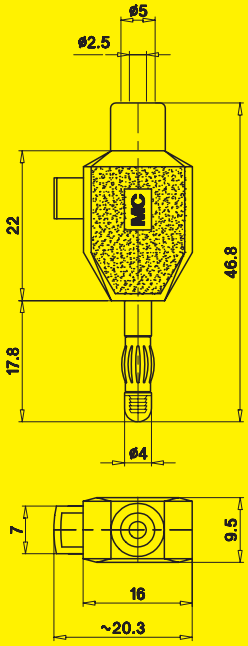

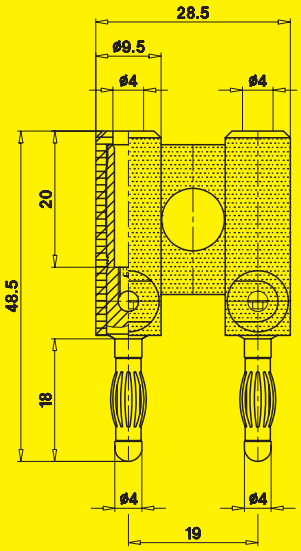

Type	KLS4	KP4-2P/19
Rated current	max. 10 A (according to lead cross section)	25 A
Contact resistance	0.8 mΩ	0.3 mΩ
Insulation	PA	PA
Operating temperature	-40°C ... +80°C	-40°C ... +80°C
Metal parts, plating	brass, nickel-plated	brass, gold-plated
Clamping possibility	cross section clamped wires: 0.127 mm² ... 2.5 mm²	component wires up to ø 2.7 mm (with grub screw M3) and ø 4 mm standard sockets at rear (plug spacing 19 mm)
		
Standard colours*	21 - 22	21 - 22
Order No.	**22.3006-***	**24.0103-***

Hexagon wrench, 1.5 mm, uninsulated	–	**STS1,5, Order No. 25.0035**
Consult supplementary label ! 	RZ 023	–

*Colour code	**20** green-yellow	**21** black	**22** red	**23** blue	**24** yellow	**25** green	**26** violet	**27** brown	**28** grey	**29** white	**30** orange	**33** transparent

ø 4 mm Connecting Plugs. The types KS4-10, KS4-12 and KS4-19 are made from a single piece of hard-drawn copper alloy.



KS4-10
KS4-12



KS4-14



KS4-19

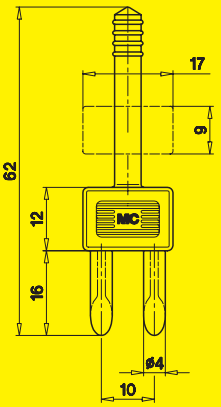

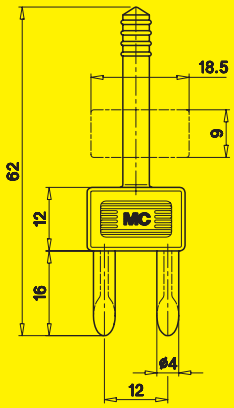

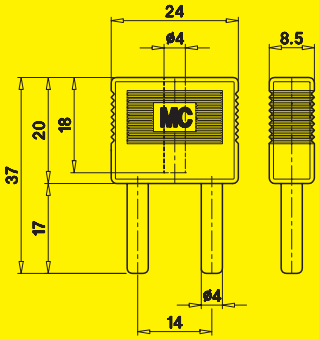

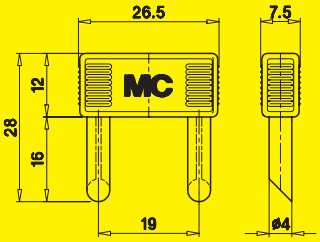

Type	KS4-10	KS4-12	KS4-14	KS4-19
Rated current	25 A	25 A	25 A	25 A
Transition resistance	1.2 mΩ	1.2 mΩ	1.2 mΩ	1.2 mΩ
Insulation	soft PVC	soft PVC	ABS	soft PVC
Operating temperature	-10°C ... +70°C	-10°C ... +70°C	-10°C ... +70°C	-10°C ... +70°C
Metal parts, plating	hollow plug, hard-drawn copper alloy, gold-plated	hollow plug, hard-drawn copper alloy, gold-plated	hard-drawn copper alloy, gold-plated	hollow plug, hard-drawn copper alloy, gold-plated
Design	insulated plug, with handle at rear	insulated plug, with handle at rear	insulated plug with axial rigid ø 4 mm socket for rear tapping	insulated plug
Plug spacing	10 mm	12 mm	14 mm	19 mm
	(A)	(A)	(A)	(A)
Standard colours*	grey	grey	grey	black
Order No.	**24.0003-28**	**24.0001-28**	**24.0004-28**	**24.0002-21**

*Colour code	**20**	**21**	**22**	**23**	**24**	**25**	**26**	**27**	**28**	**29**	**30**	**33**
	green-yellow	black	red	blue	yellow	green	violet	brown	grey	white	orange	transparent

ø 4 mm connecting plugs, furnished with our proven Multilam.
Rigid ø 4 mm socket at rear for accepting spring-loaded
ø 4 mm plugs. Plug spacing: 14 mm.

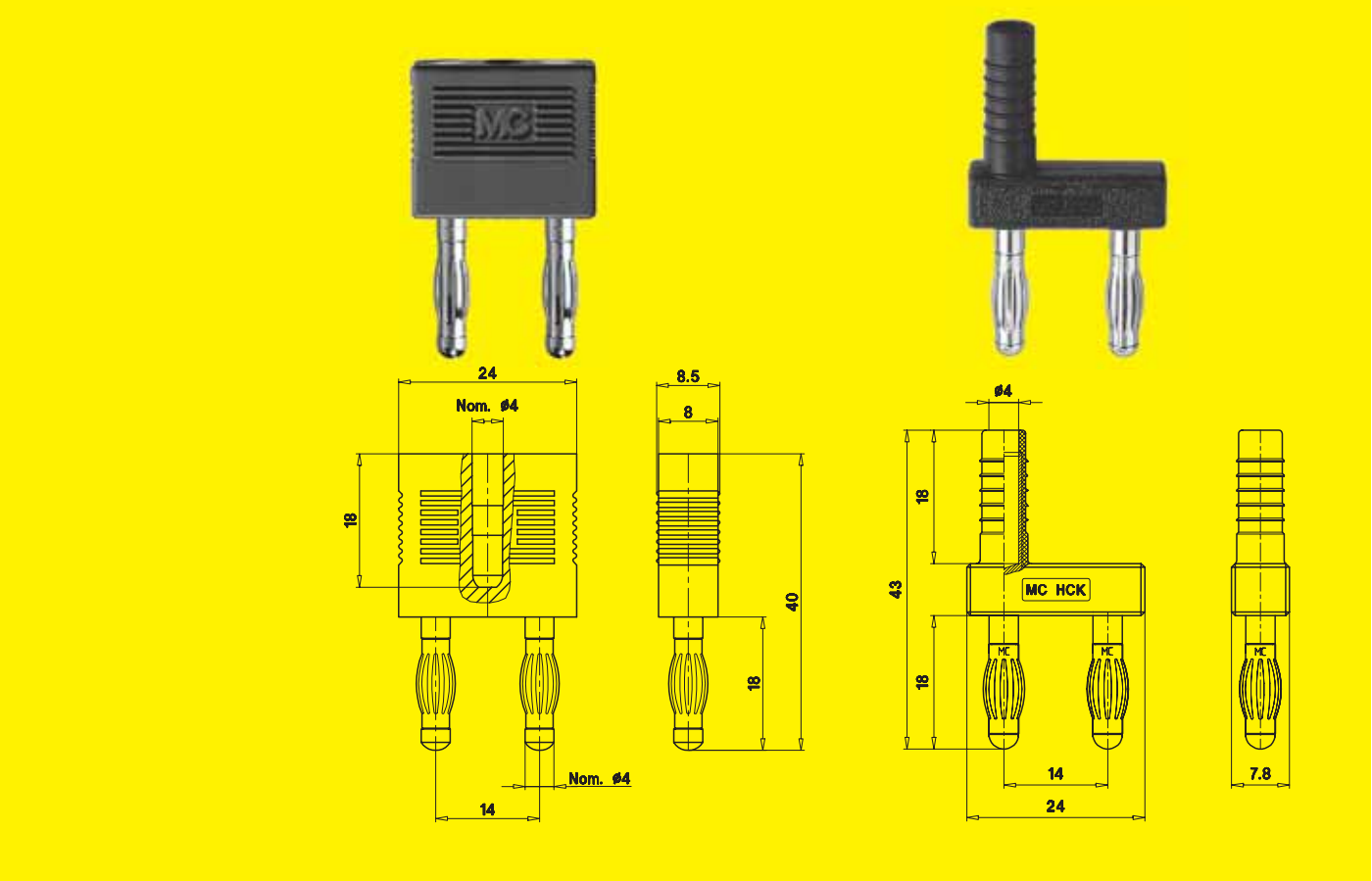

Type	KS4-14L/N	KS4-14L/A	KS4-14LA/N	KS4-14LA/A
Rated current	32 A	32 A	32 A	32 A
Insulation	ABS	ABS	PA	PA
Operating temperature	-10°C ... +70°C	-10°C ... +70°C	-40°C ... +80°C	-40°C ... +80°C
Metal parts, plating	brass, nickel-plated with Multilam, hard-drawn copper alloy, nickel-plated	brass, gold-plated with Multilam, hard-drawn copper alloy, gold-plated	brass, nickel-plated with Multilam, hard-drawn copper alloy, nickel-plated	brass, gold-plated with Multilam, hard-drawn copper alloy, gold-plated
Design	insulated ø 4 mm connecting plug with rigid ø 4 mm socket at rear		insulated ø 4 mm connecting plug with rigid ø 4 mm safety socket at rear	
Plug spacing	14 mm	14 mm	14 mm	14 mm
	(A)	(A)	(A)	(A)
Standard colours*	grey	grey	black	black
Order No.	**20.1000-28**	**20.1005-28**	**20.1010-21**	**20.1020-21**

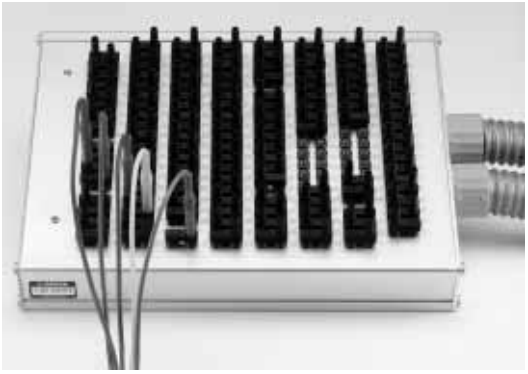

Application example:
testing device for automotive electrical systems

*Colour code	20	21	22	23	24	25	26	27	28	29	30	33
	green-yellow	black	red	blue	yellow	green	violet	brown	grey	white	orange	transparent

ø 4 mm connecting plugs, made of brass, one piece, gold-plated and furnished with our proven Multilam. Insulated or uninsulated versions. Plug spacing: 19 mm.



KS4-19L



S-KS4-19L



KS4-19L/1

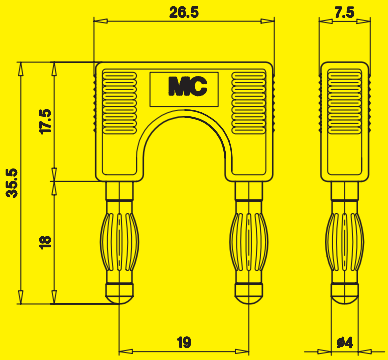

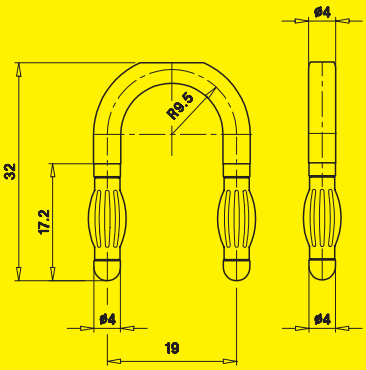

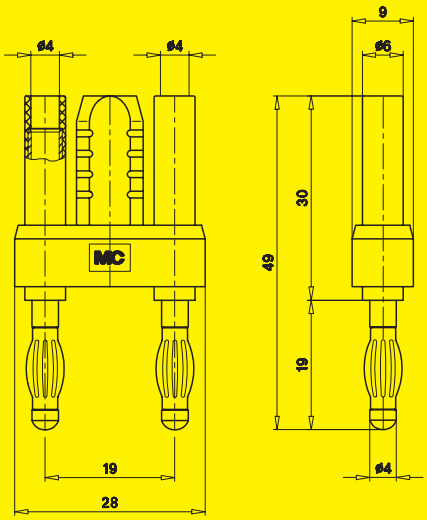

Type	KS4-19L	S-KS4-19L	KS4-19L/1
Rated current	32 A	32 A	32 A
Transition resistance	0.5 mΩ	0.5 mΩ	0.5 mΩ
Insulation	ABS	–	PA
Operating temperature	-10°C ... +70°C	–	-40°C ... +80°C
Metal parts, plating	brass, gold-plated	brass, gold-plated	brass, gold-plated
Design	insulated ø 4 mm connecting plugs	uninsulated ø 4 mm connecting plugs	insulated ø 4 mm connecting plugs with handle at rear and with two axial ø 4 mm safety sockets
Plug spacing	19 mm	19 mm	19 mm
			
Standard colours*	grey	–	black
Order No.	**24.0020-28**	**24.5052**	**24.0027-21**

*Colour code	**20** green-yellow	**21** black	**22** red	**23** blue	**24** yellow	**25** green	**26** violet	**27** brown	**28** grey	**29** white	**30** orange	**33** transparent

ø 4 mm connecting plugs, made of brass, one piece, gold-plated and furnished with our proven Multilam. Insulated or uninsulated versions. Plug spacing: 25 mm.





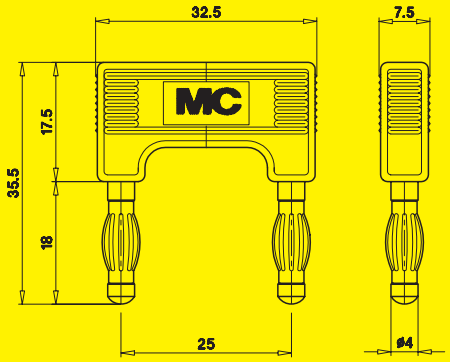

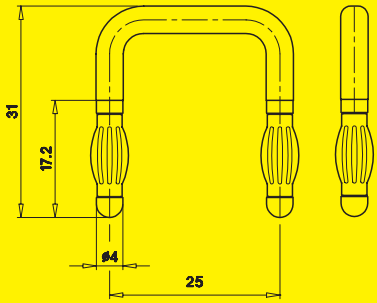

Type	KS4-25L	S-KS4-25L
Rated current	32 A	32 A
Transition resistance	0.5 mΩ	0.5 mΩ
Insulation	ABS	–
Operating temperature	-10°C ... +70°C	–
Metal parts, plating	brass, gold-plated	brass, gold-plated
Design	insulated ø 4 mm connecting plugs	uninsulated ø 4 mm connecting plugs
Plug spacing	25 mm	25 mm
Standard colours*	grey	–
Order No.	**24.0022-28**	**24.5055**

*Colour code	**20** green-yellow	**21** black	**22** red	**23** blue	**24** yellow	**25** green	**26** violet	**27** brown	**28** grey	**29** white	**30** orange	**33** transparent

ø 4 mm connecting plugs, made of brass, one piece, gold-plated and furnished with our proven Multilam. Insulated or uninsulated versions. Plug spacing: 38 mm.





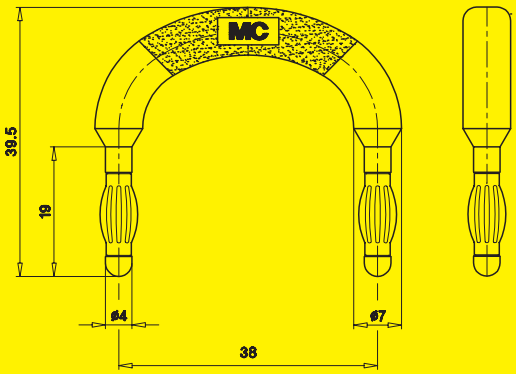

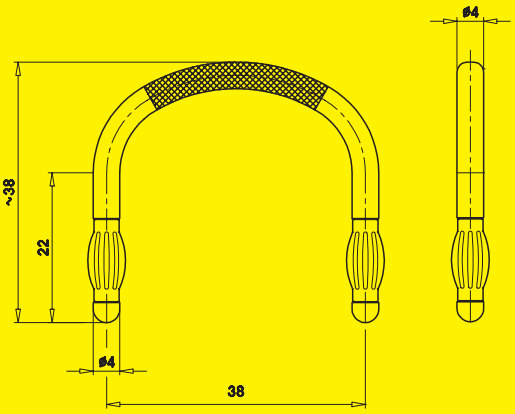

Type	VS4-38	S-VS4-38
Rated current	32 A	32 A
Transition resistance	0.5 mΩ	0.5 mΩ
Insulation	PA	–
Operating temperature	-40°C ... +80°C	–
Metal parts, plating	brass, nickel-plated (Multilam: gold-plated)	brass, nickel-plated (Multilam: gold-plated)
Design	insulated ø 4 mm connecting plugs	uninsulated ø 4 mm connecting plugs
Plug spacing	38 mm	38 mm
	(A)	(A)
Standard colours*	black	–
Order No.	**24.0026-21**	**24.5059**

*Colour code	**20** green-yellow	**21** black	**22** red	**23** blue	**24** yellow	**25** green	**26** violet	**27** brown	**28** grey	**29** white	**30** orange	**33** transparent

Uninsulated ø 4 mm rigid sockets for accepting spring-loaded ø 4 mm plugs. The sockets are pressed into predrilled plastic panels or soldered in printed-circuit boards. The sockets are available with solder connection or with flat connecting tab.



B-4N



LB4
LB4-N



LB4-A

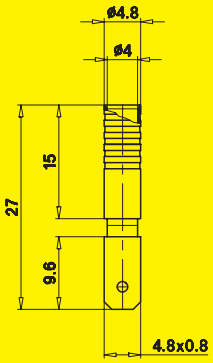

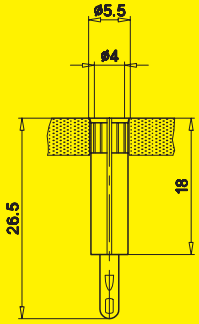

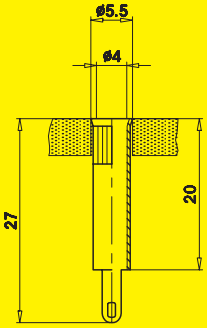

Type	B-4N	LB4	LB4-N	LB4-A
Rated current	12 A	25 A	25 A	25 A
Metal part, plating	rolled brass sheet, nickel-plated	rolled brass sheet, hard gold-plated	rolled brass sheet, nickel-plated	made of brass tubing, punched, gold-plated
Terminal	flat connecting tab 4.8 mm x 0.8 mm	solder connection	solder connection	solder connection
Drill hole	ø 4.7 mm	ø 4.8 mm	ø 4.8 mm	ø 4.8 mm
	A	A	A	A
Order No.	**64.9296**	**23.1003**	**23.5326**	**23.1004**

Connection aids	flat connecting receptacle (Au) **FSH4,8x0,8 Order No. 23.5201**	–	–	–
Recommended mounting tool	crimping pliers: e. g. Grote + Hartmann, type AZ 807	–	–	–

*Colour code	**20** green-yellow	**21** black	**22** red	**23** blue	**24** yellow	**25** green	**26** violet	**27** brown	**28** grey	**29** white	**30** orange	**33** transparent

Insulated ø 4 mm rigid sockets for accepting spring-loaded ø 4 mm plugs. The sockets are pressed into predrilled panels of plastic or metal. The sockets are available with flat connecting tab or round connecting pin. Delivered in parts.

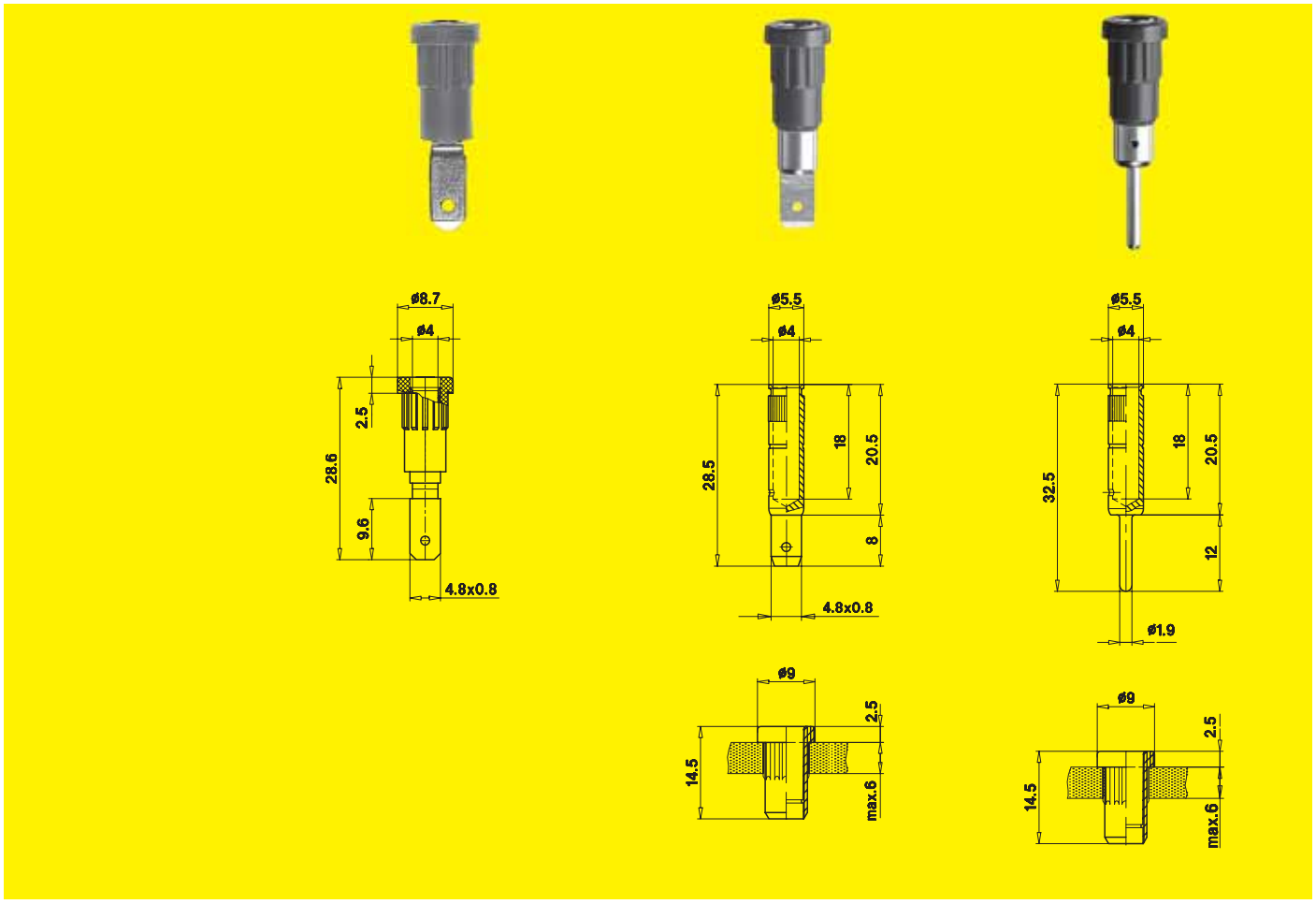

Type	EPB-4N	EB4	EB4-A
Rated current	12 A	25 A	25 A
Insulation	PA	PA	PA
Operating temperature	-40°C ... +80°C	-40°C ... +80°C	-40°C ... +80°C
Metal part, plating	rolled brass sheet, nickel-plated	machined brass, gold-plated	machined brass, gold-plated
Terminal	flat connecting tab 4.8 mm x 0.8 mm	flat connecting tab 4.8 mm x 0.8 mm	round connecting pin ø 1.9 mm
Drill hole	ø 6.9 mm	ø $6.8^{+0.1}$ mm	ø $6.8^{+0.1}$ mm
	Ⓐ	Ⓐ	Ⓐ
Standard colours*	21 - 27	20 - 29	20 - 29
Order No.	**64.9297-***	**23.1013-***	**23.1014-***

Insulation	**not available singly**	**I-EB4, Order No. 23.5013-***	
Socket	**B-4N, Order No. 64.9296,** see also page 101	**B-EB4, Order No. 23.5012**	**B-EB4-A, Order No. 23.5014**
Assembly tool	**MB4, Order No. 25.0032**	**MB4, Order No. 25.0032**	
Drill	**–**	**HSS6,8, Order No. 25.0042**	
Connection aids	flat connecting receptacle (Au) **FSH4,8x0,8, Order No. 23.5201**		round connecting receptacle (Au) **RSH1,9, Order No. 23.5202**
Recommended mounting tool	for FSH...: crimping pliers, e. g. Grote + Hartmann, type AZ 807		for RSH1,9: crimping pliers, e. g. Grote + Hartmann, type AZ 500
Assembly instructions on request !	–	MA 103	

*Colour code	**20** green-yellow	**21** black	**22** red	**23** blue	**24** yellow	**25** green	**26** violet	**27** brown	**28** grey	**29** white	**30** orange	**33** transparent

Insulated ø 4 mm sockets for accepting ø 4 mm plugs. The sockets are pressed into predrilled panels of plastic or metal.

The sockets are available with flat connecting tab or round connecting pin. Delivered in parts.

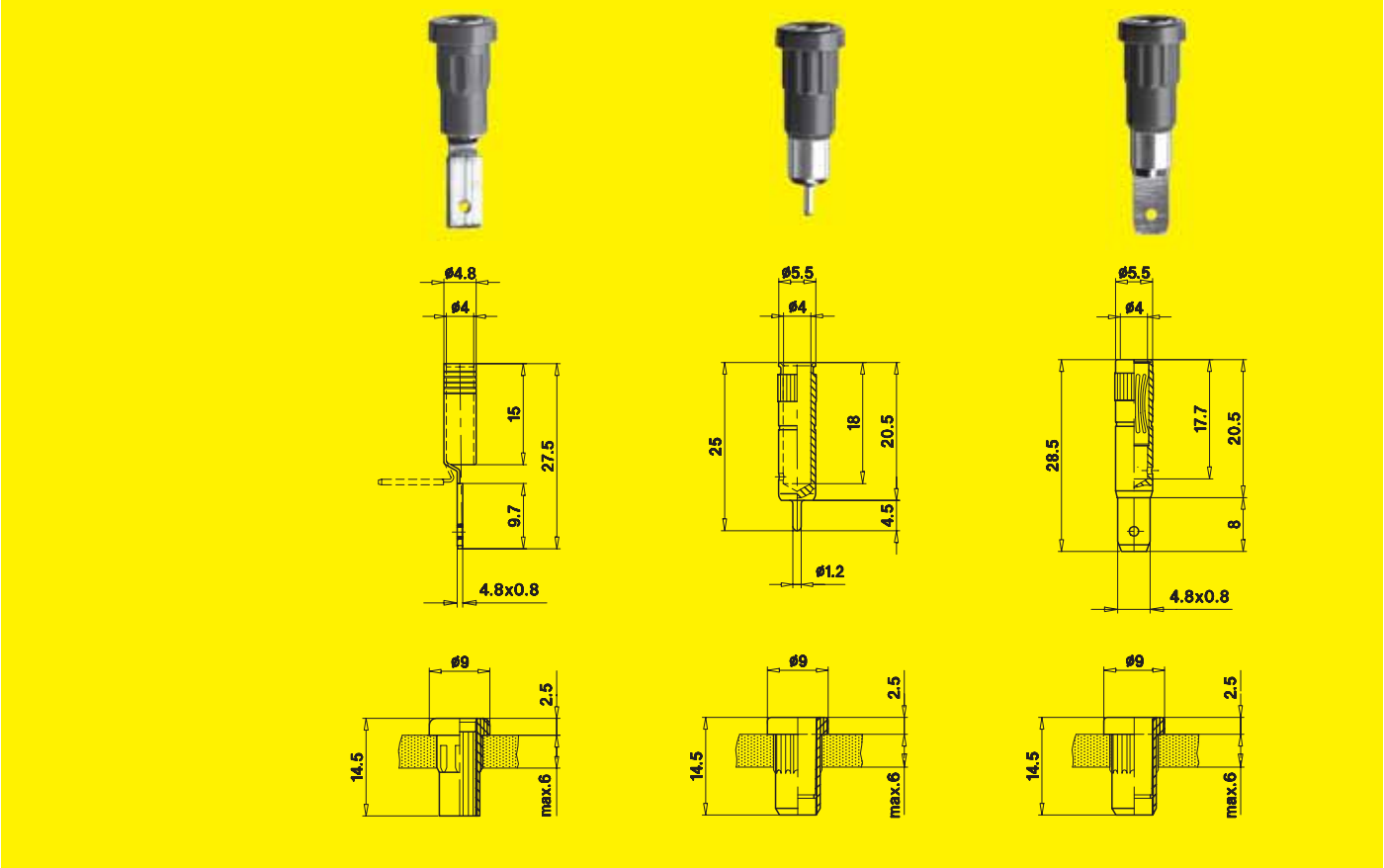

Type	EB4-B	EB4-C	EB4-F
Rated current	25 A	25 A	25 A
Contact resistance	–	–	0.5 mΩ
Insulation	PA	PA	PA
Operating temperature	-40°C ... +80°C	-40°C ... +80°C	-40°C ... +80°C
Socket design	rigid	rigid	spring-loaded with Multilam
Metal part, plating	brass sheet, punched and rolled, nickel-plated	machined brass, gold-plated	machined brass, Optalloy finish with Multilam
Terminal	flat connecting tab 4.8 mm x 0.8 mm, can be bent to 90°, once only	round connecting pin ø 1.2 mm	flat connecting tab 4.8 mm x 0.8 mm
Drill hole	ø $6.8^{+0.1}$ mm	ø $6.8^{+0.1}$ mm	ø $6.8^{+0.1}$ mm
	A	A	A
Standard colours*	20 - 29	20 - 29	20 - 29
Order No.	**23.1015-***	**23.1016-***	**23.1023-***

Insulation	**I-EB4-B, Order No. 23.5019-***	**I-EB4, Order No. 23.5013-***	
Socket	**B-EB4-B, Order No. 23.5026**	**B-EB4-C, Order No. 23.5308**	**B-EB4-F, Order No. 23.5042**
Assembly tool	**MB4, Order No. 25.0032**	**MB4, Order No. 25.0032**	**MB4, Order No. 25.0032**
Drill	**HSS6,8, Order No. 25.0042**	**HSS6,8, Order No. 25.0042**	**HSS6,8, Order No. 25.0042**
Connection aids	flat connecting receptacle (Au) **FSH4,8x0,8 Order No. 23.5201**	–	flat connecting receptacle (Au) **FSH4,8x0,8 Order No. 23.5201**
Assembly instructions on request !	MA 103		

*Colour code	**20** green-yellow	**21** black	**22** red	**23** blue	**24** yellow	**25** green	**26** violet	**27** brown	**28** grey	**29** white	**30** orange	**33** transparent

LB4-R, LB4-R/A:
Uninsulated ø 4 mm rigid earth sockets for accepting spring-loaded ø 4 mm plugs. Nickel- or gold-plated versions, available with ring or hexagon nut.

LB4-R/I:
Insulated screw-in socket with solder connection. The socket can be screw-mounted in predrilled insulation panels. Hexagon nut M6x0.75 is supplied.



LB4-R
LB4-R/A



LB4-R/I

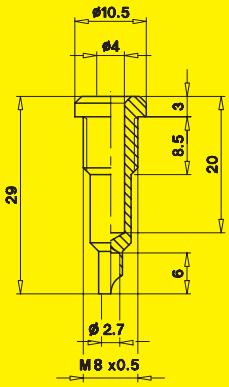

B-LB4-R
B-LB4-R/A

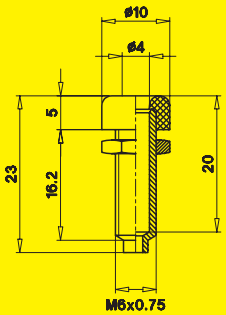

Type	LB4-R	LB4-R/A	LB4-R/I
Rated current	40 A	40 A	20 A
Metal part socket, plating	machined brass, nickel-plated	machined brass, gold-plated	machined brass, nickel-plated
Insulation	–	–	PA
Operating temperature	–	–	-40°C ... +80°C
Terminal	soldering hole	soldering hole	external thread M6 and solder connection
Drill hole	ø 8.3 mm	ø 8.3 mm	6.2 ± 0.1 mm
Standard colours*	–	–	21, 22, 25
	Order No.	**Order No.**	**Order No.**
with round nut:	**23.0080**	**23.0490**	**–**
with hexagon nut:	**23.0090**	**23.0470**	**49.7068-***

Assembly material

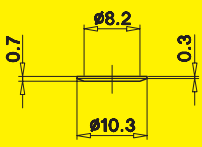

SP4

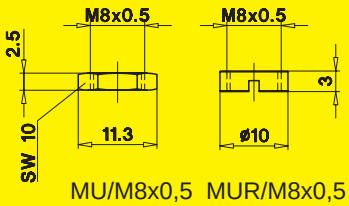

MU/M8x0,5 MUR/M8x0,5

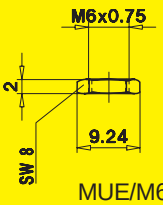

MUE/M6x0,75

Socket without nut	**B-LB4-R, Order No. 23.5044**	**B-LB4-R/A, Order No. 23.5339**	**BI-LB4-R/I, Order No. 49.7090-***
Assembly material: round nut hexagon nut U washer	**MUR/M8x0,5, Order No. 23.5110** **MU/M8x0,5, Order No. 23.5112** **SP4, Order No. 23.5107**		**–** **MUE/M6x0,75, Order No. 50.2008** **–**
Special spanner (suitable for round nut)	**SS4, Order No. 25.0021**		–

*Colour code	**20**	**21**	**22**	**23**	**24**	**25**	**26**	**27**	**28**	**29**	**30**	**33**
	green-yellow	black	red	blue	yellow	green	violet	brown	grey	white	orange	transparent

Insulated ø 4 mm rigid sockets for accepting spring-loaded ø 4 mm plugs. Metal or plastic thread for screw-fitting in predrilled panels.
The metal parts are available with different terminals.

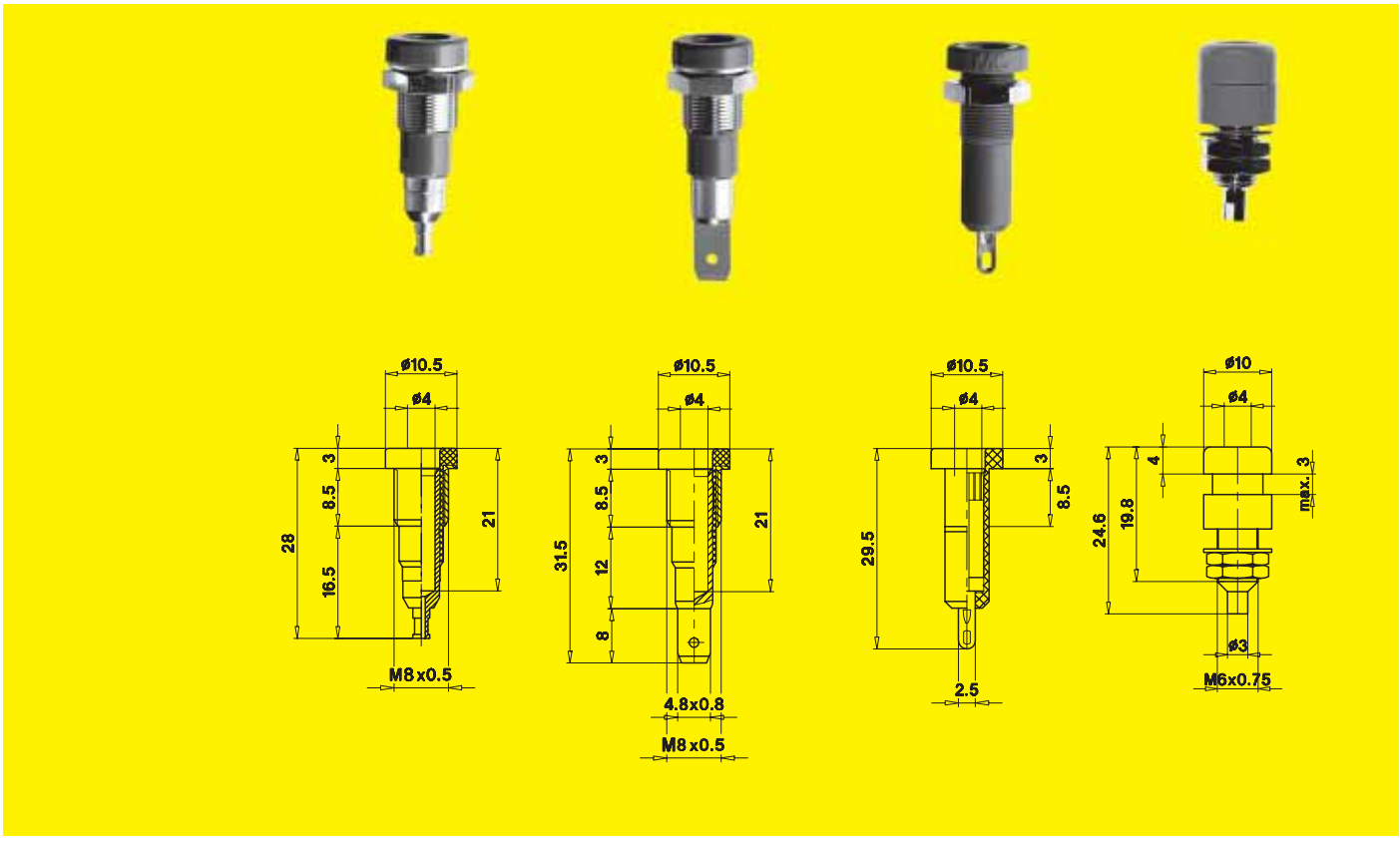

Type	LB-I4R	LB-I4R-A	LB-I4R-B	EBI-40
Rated current	25 A	25 A	25 A	20 A
Insulation	PA	PA	PA	PA
Operating temperature	-40°C ... +80°C	-40°C ... +80°C	-40°C ... +80°C	-40°C ... +80°C
Thread design	metal thread M8	metal thread M8	plastic thread M8	metal thread M6
Metal part socket, plating	machined brass, Optalloy finish	machined brass, gold-plated	rolled brass sheet, nickel-plated	machined brass, nickel-plated
Terminal	solder connection	flat connecting tab 4.8 mm x 0.8 mm	solder connection	solder connection
Drill hole	ø 8.3 mm	ø 8.3 mm	ø 8.3 mm	ø 7.5 mm
	Ⓐ	Ⓐ	Ⓐ	Ⓐ
Standard colours*	20 - 29	20 - 29	21 - 25, 29	21 - 25, 29
	Order No.	**Order No.**	**Order No.**	**Order No.**
with round nut:	**23.0100-***	**23.0180-***	**23.0460-***	**–**
with hexagon nut:	**23.0110-***	**23.0190-***	**23.0450-***	**69.8321-***

Socket without nut	**BI-LB-I4R, Order No. 23.6111-***	**BI-LB-I4R-A, Order No. 23.6333-***	**BI-LB-I4R-B, Order No. 23.8111-***	Not available as separate parts !
Assembly material: round nut hexagon nut U washer	**MUR/M8x0,5, Order No. 23.5110**, see page 104 **MU/M8x0,5, Order No. 23.5112**, see page 104 **SP4, Order No. 23.5107**, see page 104		**MUR/M8x0,5, 23.5110** **MU/M8x0,5, 23.5112**	
Special spanner (suitable for round nut)	**SS4, Order No. 25.0021**	**SS4, Order No. 25.0021**	**SS4, Order No. 25.0021**	–
Connection aids	–	flat connecting receptacle (Au) **FSH4,8x0,8, Order No. 23.5201**	–	–

*Colour code	**20** green-yellow	**21** black	**22** red	**23** blue	**24** yellow	**25** green	**26** violet	**27** brown	**28** grey	**29** white	**30** orange	**33** transparent

Insulated ø 4 mm rigid and spring-loaded sockets for accepting ø 4 mm plugs. For mounting, have a metal thread jacket on the insulation.

Different versions available: round or hexagon nut, ring or square insulating head, solder connection or flat connecting tab.

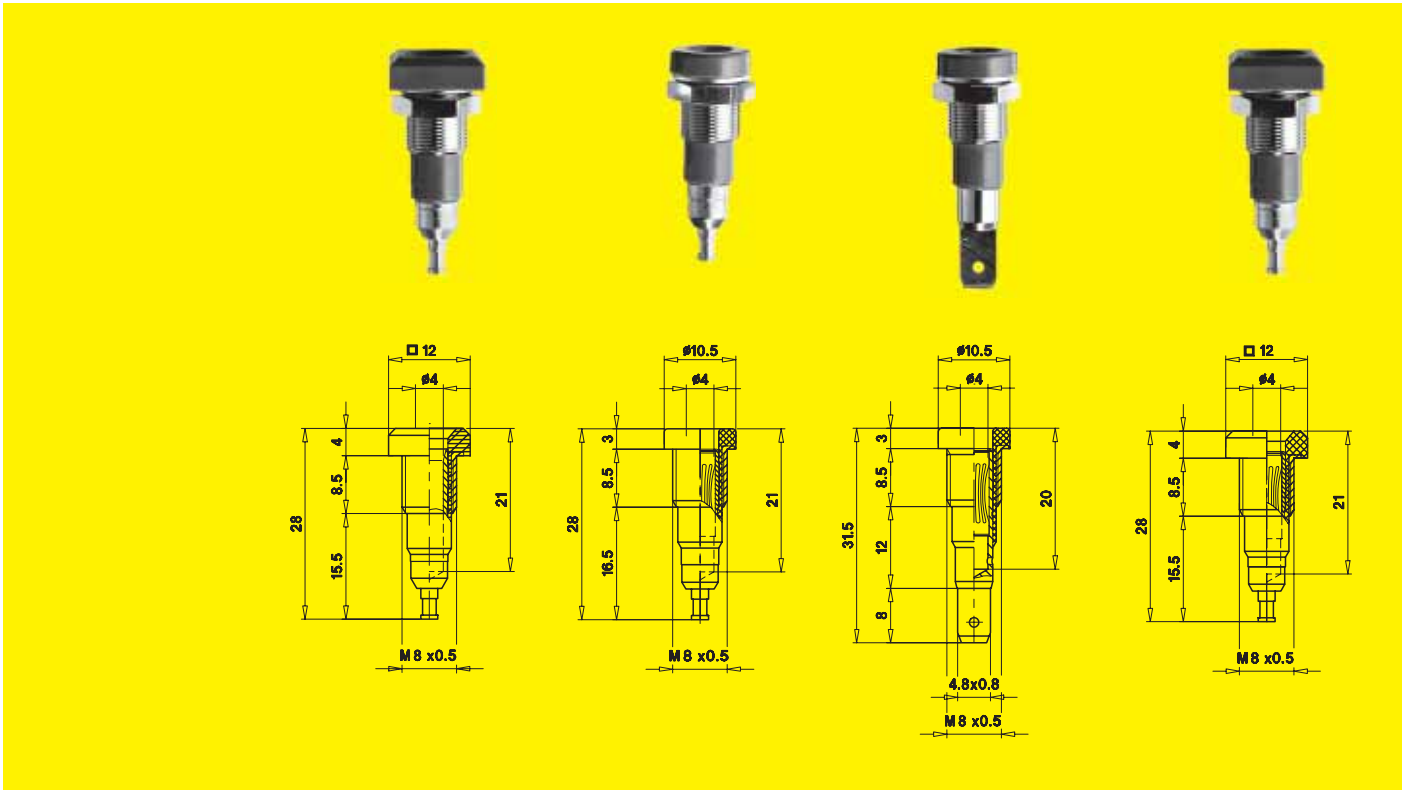

Type	LB-I4Q	LB-IF4R	LB-IF4R-A	LB-IF4Q
Rated current	25 A	25 A	25 A	25 A
Contact resistance	–	0.5 mΩ	0.5 mΩ	0.5 mΩ
Insulation	PA	PA	PA	PA
Operating temperature	-40°C ... +80°C	-40°C ... +80°C	-40°C ... +80°C	-40°C ... +80°C
Socket design	rigid	spring-loaded	spring-loaded	spring-loaded
Metal part socket, plating	machined brass, Optalloy finish	machined brass, Optalloy finish	machined brass, Optalloy finish	machined brass, Optalloy finish
Terminal	solder connection	solder connection	flat connecting tab 4.8 mm x 0.8 mm	solder connection
Drill hole	ø 8.3 mm	ø 8.3 mm	ø 8.3 mm	ø 8.3 mm
	Ⓐ	Ⓐ	Ⓐ	Ⓐ ☺
Standard colours*	20 - 29	20 - 29	20 - 29	20 - 29
	Order No.	**Order No.**	**Order No.**	**Order No.**
with round nut:	**23.0160-***	**23.0130-***	**23.0200-***	**23.0170-***
with hexagon nut:	**23.0120-***	**23.0140-***	**23.0210-***	**23.0150-***

Socket without nut	**BI-LB-I4Q, Order No. 23.6222-***	**BI-LB-IF4R, Order No. 23.6444-***	**BI-LB-IF4R-A, Order No. 23.6666-***	**BI-LB-IF4Q, Order No. 23.6555-***
Assembly material: round nut hexagon nut U washer	**MUR/M8x0,5, Order No. 23.5110**, see page 104 **MU/M8x0,5, Order No. 23.5112**, see page 104 **SP4, Order No. 23.5107**, see page 104			
Special spanner (suitable for round nut)	**SS4, Order No. 25.0021**			
Connection aids	–	–	flat connecting receptacle (Au) **FSH4,8x0,8, Order No. 23.5201**	–

*Colour code	**20**	**21**	**22**	**23**	**24**	**25**	**26**	**27**	**28**	**29**	**30**	**33**
	green-yellow	black	red	blue	yellow	green	violet	brown	grey	white	orange	transparent

Two pole insulated ø 4 mm sockets for accepting ø 4 mm plugs. Socket design rigid or spring-loaded. For mounting, have a metal thread jacket on the insulation. Solder connections. Two hexagon nuts and two U-washers are supplied.

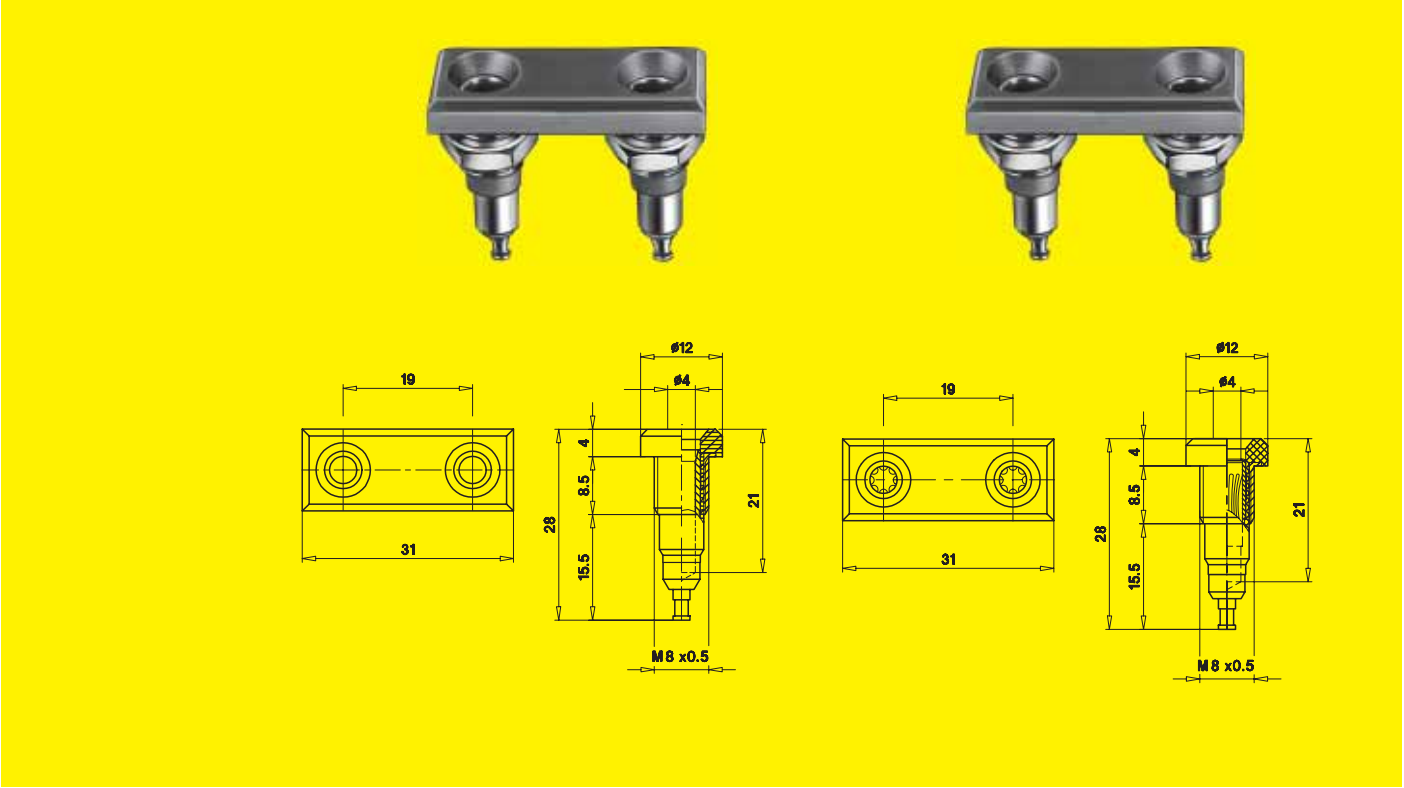

Type	LB-I4/2P	LB-IF4/2P
Rated current	25 A	25 A
Contact resistance	–	0.5 mΩ
Insulation	PA	PA
Operating temperature	-40°C ... +80°C	-40°C ... +80°C
Socket design	rigid	spring-loaded
Socket spacing	19 mm	19 mm
Metal parts socket, plating	machined brass, Optalloy finish	machined brass, Optalloy finish
Terminal	solder connection	solder connection
Drill hole / assembly spacing	ø 8.3 mm / 19 mm	ø 8.3 mm / 19 mm
Standard colours*	20 - 26, 28, 29	20 - 26, 28, 29
Order No.	**23.2000-***	**23.2010-***

Socket without nuts and U-washers	**BI-LB-I4/2P, Order No. 23.6777-***	**BI-LB-IF4/2P, Order No. 23.6888-***
Assembly material: hexagon nut U-washer	**MU/M8x0,5, Order No. 23.5112**, see page 104 **SP4, Order No. 23.5107**, see page 104	

*Colour code	20	21	22	23	24	25	26	27	28	29	30	33
	green-yellow	black	red	blue	yellow	green	violet	brown	grey	white	orange	transparent

Protective cap to cover-up unplugged, unused sockets type LB...

To achieve a touch-proof protection on the socket's connecting side, some of our slip-on insulators are suitable.

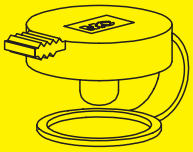

SCHUDE-LB

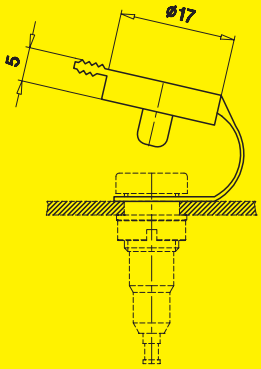

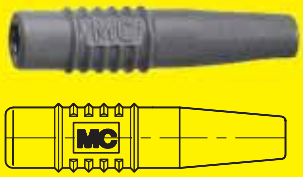

KT410-L
KT415-L
KT425-L

Type	SCHUDE-LB	KT410-L	KT415-L	KT425-L
Function	Protective cap to cover-up the sockets LB4-R, LB4-R/A, LB4-R/I, LB-I4R, LB-I4R-A	safety hoods as a touch protection of the rear connecting side of the sockets LB4, LB4A, LB4R, EB4 ... LB-IF4R / .../Q		
		for lead cross section 1.0 mm²	for lead cross section 1.5 mm²	for lead cross section 2.5 mm²
Material	LDPE	soft PVC	soft PVC	soft PVC
Operating temperature	-10°C ... +70°C	-10°C ... +80°C	-10°C ... +80°C	-10°C ... +80°C
Standard colours*	transparent	21 - 29	21 - 29	21 - 29
Order No.	**23.5141-33**	**22.2170-***	**22.2180-***	**22.2190-***

Examples for the use of our socket accessories:

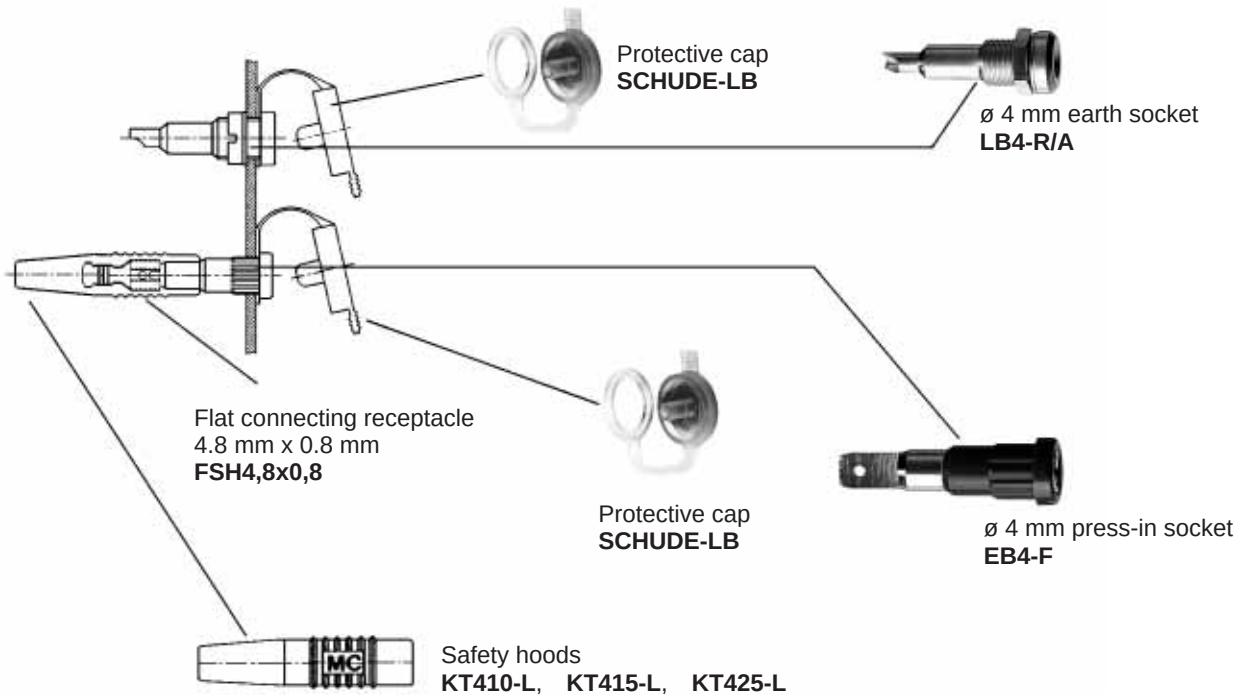

*Colour code	20	21	22	23	24	25	26	27	28	29	30	33
	green-yellow	black	red	blue	yellow	green	violet	brown	grey	white	orange	transparent

MPK4-T:
ø 4 mm earth binding post, rigid, uninsulated. With cross hole for quick wire connection. Head undetachable.

PK4-T/2P:
Two pole ø 4 mm binding post with covered sockets, rigid. With cross hole for quick wire connection. Insulated head (red / black) undetachable. Limited opening.





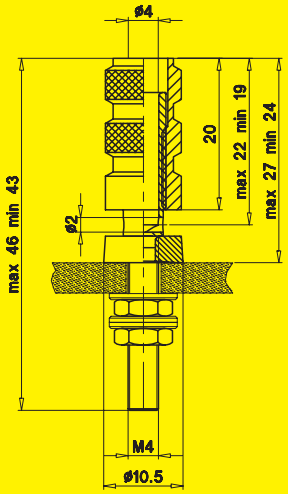

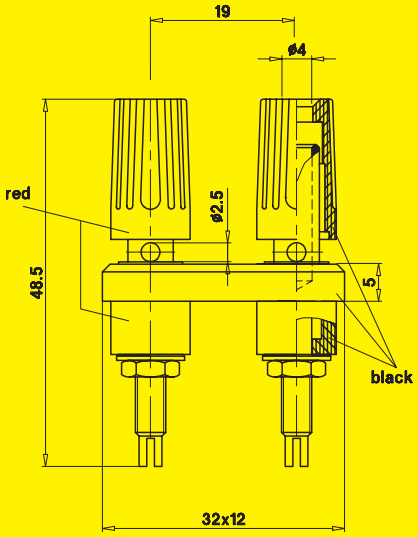

Type	MPK4-T	PK4-T/2P
Rated current	35 A	35 A
Insulation	–	PA
Operating temperature	–	-40°C ... +80°C
Metal part, plating	machined brass, nickel-plated	machined brass, gold-plated
Terminal	threaded bolt M4 and ø 2 mm cross hole	threaded bolt M4 and ø 2.5 mm cross hole
Tightening torque	–	max. 100 Ncm
Panel thickness	max. 6 mm	max. 4 mm
Drill hole	ø 4.3 mm	ø 6.4 mm
Standard colours*	–	–
Order No.	**23.0400**	**23.0380**

*Colour code	**20** green-yellow	**21** black	**22** red	**23** blue	**24** yellow	**25** green	**26** violet	**27** brown	**28** grey	**29** white	**30** orange	**33** transparent

Binding posts with covered ø 4 mm socket, rigid with ø 2.5 mm cross hole. Insulated head undetachable. Limited opening. For panels to a max. 4 mm. Binding post insulation with anti-rotation lug.

The metal parts of PK4-TS are made of copper-tellure (low thermal e. m. f.). For low thermal e. m. f. connecting leads, we recommend types LK410-TS and LK425-A/TS, see page 63.



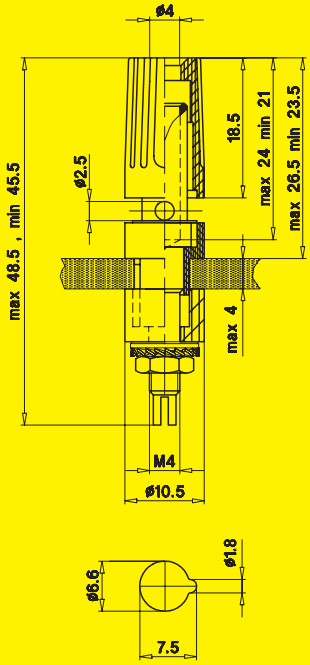

Type	PK4-T	PK4-T/A	PK4-TS
Rated current	35 A	35 A	35 A
Insulation	PA	PA	PA
Operating temperature	-40°C ... +80°C	-40°C ... +80°C	-40°C ... +80°C
Metal part, plating	machined brass, nickel-plated	machined brass, gold-plated	machined Cu-Te, gold-plated
Terminal	threaded bolt M4 and ø 2.5 mm cross hole	threaded bolt M4 and ø 2.5 mm cross hole	threaded bolt M4 and ø 2.5 mm cross hole
Tightening torque	max. 100 Ncm	max. 100 Ncm	max. 100 Ncm
Panel thickness	max. 4 mm	max. 4 mm	max. 4 mm
Drill hole	see sketch	see sketch	see sketch
	A	A	A
Standard colours*	20 - 26, 29	20 - 26, 29	21 - 22
Order No.	**23.0330-***	**23.0360-***	**23.0350-***

8

*Colour code	**20** green-yellow	**21** black	**22** red	**23** blue	**24** yellow	**25** green	**26** violet	**27** brown	**28** grey	**29** white	**30** orange	**33** transparent

Binding posts with covered ø 4 mm socket, rigid. With ø 2 mm cross hole for quick wire connection. Insulated head undetachable. Suitable for mounting on panels or test boards with anti-rotation lug.

Various colour combinations (with colours 21 - 26) can be achieved with the two part insulation head of the PKUI-35. For example, to order a 2 colour version: PKUI-35, Order No. 64.9214-2122 for black / red (head/crown).

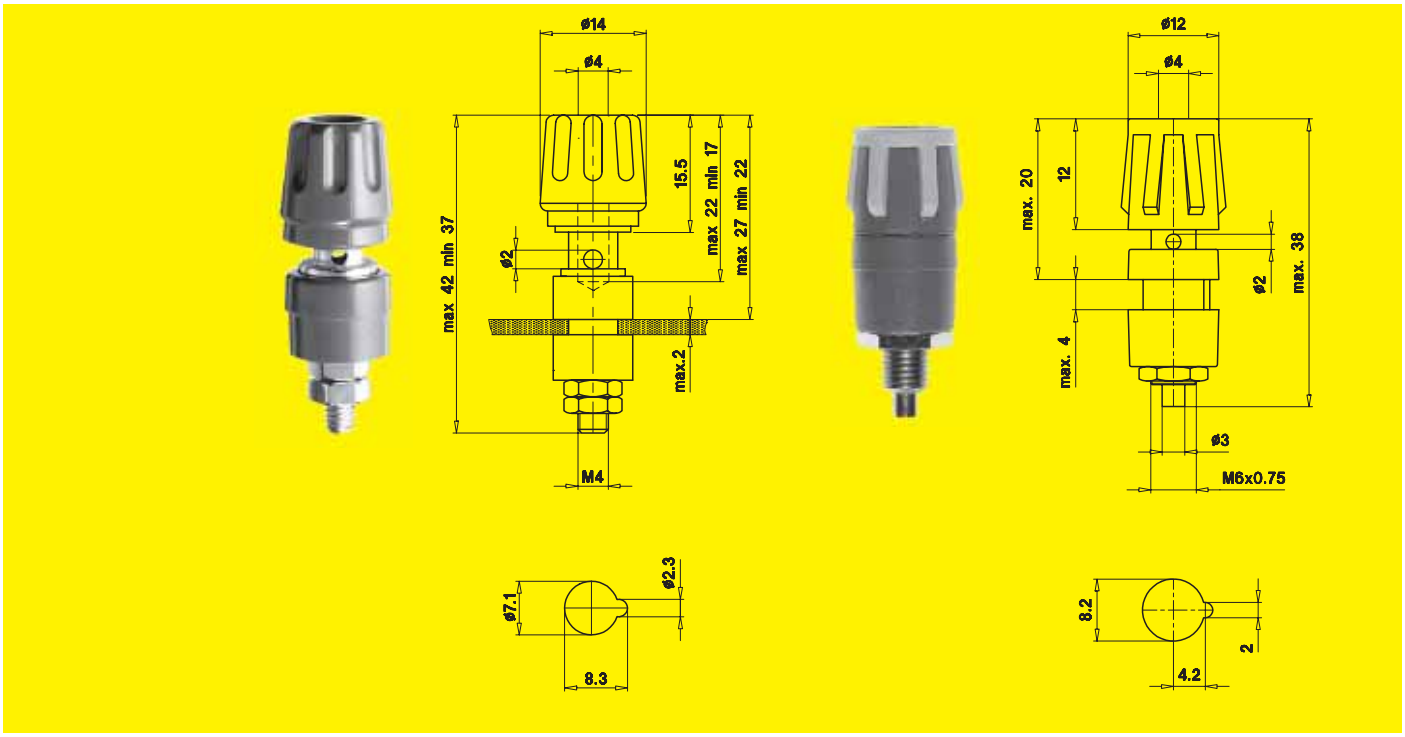

Type	PK4-H	PKUI-35
Rated current	35 A	35 A
Insulation	Duroplast	PA
Operating temperature	-10°C ... +80°C	-40°C ... +80°C
Metal part, plating	machined brass, nickel-plated	machined brass, nickel-plated
Terminal	threaded bolt M4 and ø 2 mm cross hole	threaded bolt M6 and ø 2 mm cross hole
Tightening torque	max. 100 Ncm	max. 100 Ncm
Panel thickness	max. 2 mm	max. 4 mm
Drill hole	see sketch	see sketch
Standard colours*	20 - 25	20 - 26
Order No.	**23.0310-***	**64.9214-***

*Colour code	**20** green-yellow	**21** black	**22** red	**23** blue	**24** yellow	**25** green	**26** violet	**27** brown	**28** grey	**29** white	**30** orange	**33** transparent

Highly flexible adapter leads. One end with ø 2 mm stackable plug, the other end with ø 4 mm stackable plug. Available with hollow or Multilam plugs.

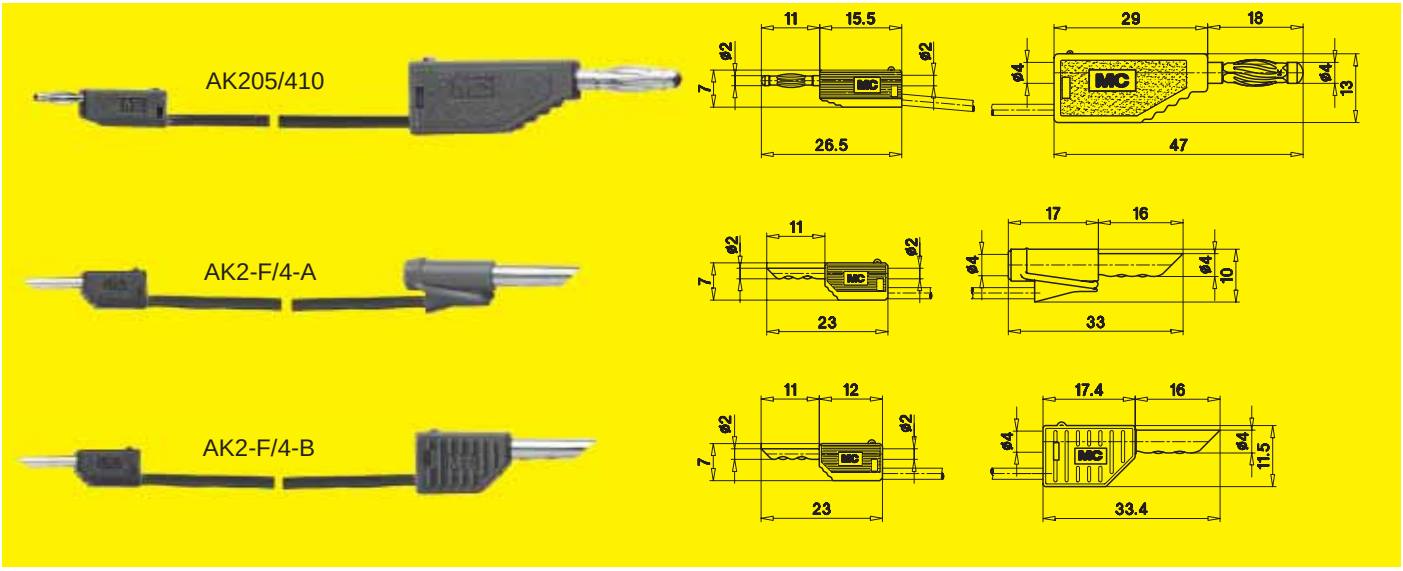

Type	AK205/410	AK2-F/4-A	AK2-F/4-B
Rated current	10 A	10 A	10 A
Lead cross section	0.5 mm^2	0.5 mm^2	0.5 mm^2
Lead insulation	PVC	PVC	PVC
Operating temperature	-10°C ... +70°C	-10°C ... +70°C	-10°C ... +70°C
Insulation	PA	PVC / PA	PA
Plug design	Multilam plug	hollow plug	hollow plug
Metal parts, plating	brass, gold-plated with Multilam, hard-drawn copper alloy, gold-plated	hard-drawn copper alloy, gold-plated	hard-drawn copper alloy, gold-plated
	Ⓐ	Ⓐ	Ⓐ
Standard colours*	20 - 29	20 - 29	20 - 29
Standard lengths:	**Order No.**	**Order No.**	**Order No.**
7.5 cm	**28.0011-007***	**28.0009-007***	**28.0010-007***
15 cm	**28.0011-015***	**28.0009-015***	**28.0010-015***
30 cm	**28.0011-030***	**28.0009-030***	**28.0010-030***
45 cm	**28.0011-045***	**28.0009-045***	**28.0010-045***
60 cm	**28.0011-060***	**28.0009-060***	**28.0010-060***

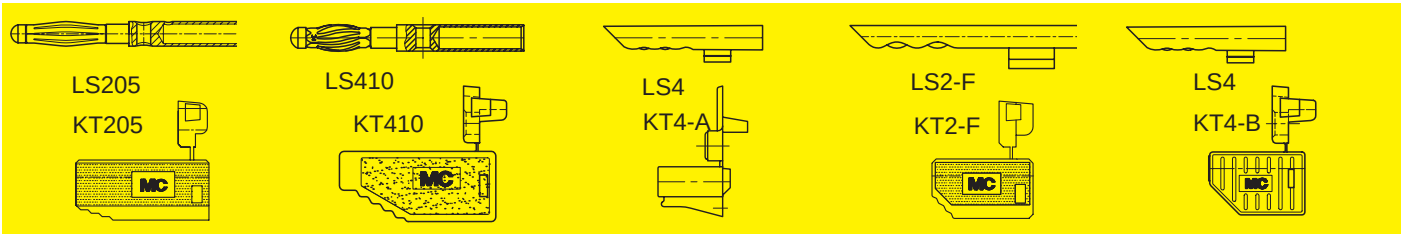

ø 2 mm insulator ø 4 mm insulator	**KT205, Order No. 22.2030-*** **KT410, Order No. 22.2140-***	**KT2-F, Order No. 22.2020-*** **KT4-A, Order No. 22.2050-***	**KT2-F, Order No. 22.2020-*** **KT4-B, Order No. 22.2060-***
ø 2 mm plug ø 4 mm plug	**LS205, Order No. 22.1004** **LS410, Order No. 22.1010**	**LS2-F, Order No. 22.1006** **LS4, Order No. 22.1005**	**LS2-F, Order No. 22.1006** **LS4, Order No. 22.1005**
Multistrand wires, see pages 124 - 126	**FLEXI-E/HK 0,50 (PVC), Order No. 60.7005-***	**FLEXI-E/HK 0,50 (PVC), Order No. 60.7005-***	**FLEXI-E/HK 0,50 (PVC), Order No. 60.7005-***
Assembly instructions on request !	MA 110 + MA 134	MA 118 + MA 133	MA 111 + MA 133

*Colour code	**20**	**21**	**22**	**23**	**24**	**25**	**26**	**27**	**28**	**29**	**30**	**33**
	green-yellow	black	red	blue	yellow	green	violet	brown	grey	white	orange	transparent

Highly flexible adapter leads. One end with axial ø 4 mm safety socket, the other end with stackable ø 2 mm Multilam plug or spring-loaded 0.63 (ø 0.78) socket for wire-wrap-posts.



AK205/405-BK

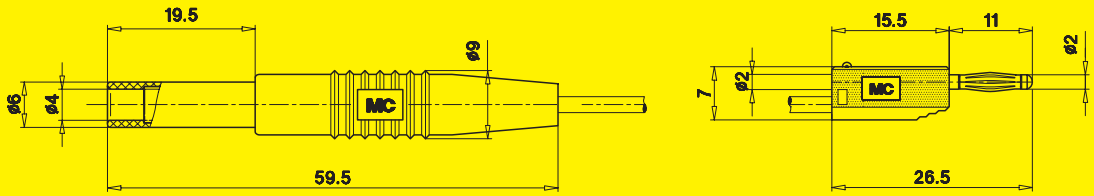



AK0,63-B/405-BK

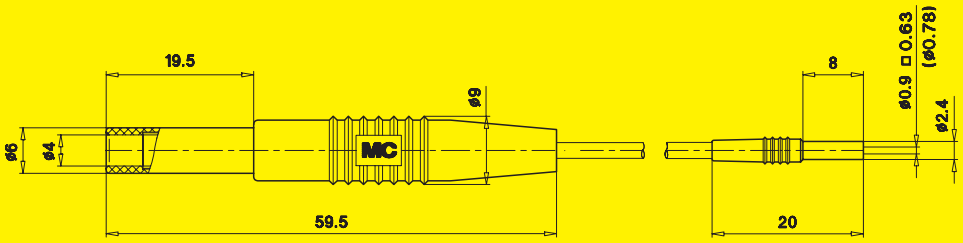

Type	AK205/405-BK	AK0,63-B/405-BK
	These adapter leads can only be used at a rated voltage of 30 V_{AC} / 60 V_{DC} !	
Rated current	10 A	6 A
Lead cross section	0.5 mm²	0.25 mm²
Lead insulation	PVC	PVC
Operating temperature	-10°C ... +70°C	-10°C ... +70°C
Insulation plug / socket	PVC / PA	PVC / PA
Metal parts, plating	brass, gold-plated	brass, gold-plated
Terminal	stackable ø 2 mm plug	spring-loaded 0.63 (ø 0.78) socket
Standard colours*	21 - 22	black
Standard length	15 cm	15 cm
Order No.	**28.0012-015***	**28.0005-01521**

	ø 2 mm plug	ø 4 mm safety socket	0,63 (ø 0,78) mm socket	ø 4 mm safety socket
Insulator	**KT205 Order No. 22.2030-***	**KT405-BK Order No. 22.230-***	**KT1-S Order No. 22.2070-***	**KT405-BK Order No. 22.2230-***
Plug / socket	**LS205 Order No. 22.1004**	**LS410-BK-I Order No. 22.1037**	**LS0,63-0,78-B-I Order No. 49.7001**	**LS410-BK-I Order No. 22.1037**
Multistrand wires, see pages 124 - 126	**FLEXI-E/HK 0,50 (PVC), Order No. 60.7005-***		**FLEXI-E/HK 0,25 (PVC), Order No. 60.7013-***	
Assembly instructions on request !	MA 127		MA 128	
Consult supplementary label !	RZ 002		RZ 002	

*Colour code	20	21	22	23	24	25	26	27	28	29	30	33
	green-yellow	black	red	blue	yellow	green	violet	brown	grey	white	orange	transparent

Highly flexible adapter leads. One end with axial ø 4 mm safety socket, the other end with different terminals.

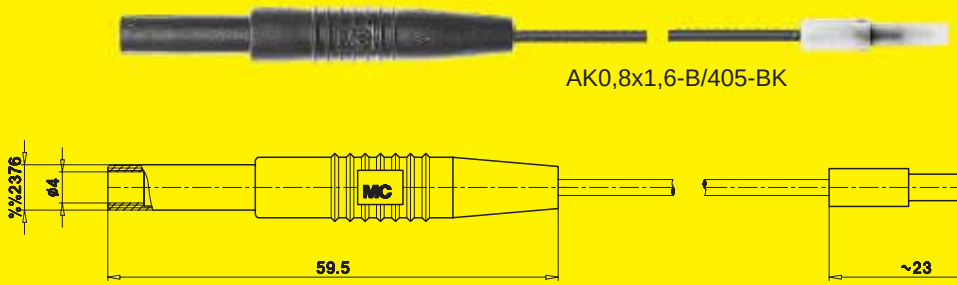

AK0,8x1,6-B/405-BK



AK1-A/4012-BK

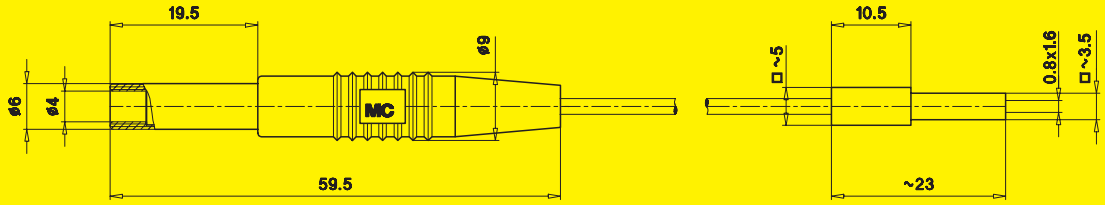

Type	AK0,8x1,6-B/405-BK	AK1-A/4012-BK
	These adapter leads can only be used at a rated voltage of 30 V_{AC} / 60 V_{DC} !	
Rated current	10 A	3 A
Lead cross section	0.5 mm²	0.127 mm²
Lead insulation	PVC	PVC
Operating temperature	-10°C ... +70°C	-10°C ... +70°C
Insulation adapter / socket	PVC / PA	PVC / PA
Metal parts, plating	brass, gold-plated	brass, gold-plated
Terminal	test plug 0.8 x 1.6 mm	stackable, rigid ø 1 mm plug (socket at rear is spring-loaded)
Standard colour*	black	21 - 22
Standard-Länge	22 cm	15 cm
Order No.	**28.0006-02221**	**28.0007-015***

	Not available as separate parts !	ø 1 mm plug	ø 4 mm safety socket
Insulator		**KT1-A Order No. 22.2040-***	**KT410-BK Order No. 22.2250-***
Plug		**LS1-A Order No. 22.1019**	**LS410-BK-I Order No. 22.1037**
Multistrand wires, see pages 124 - 126		**HK 0,127 (PVC), Order No. 22.0060-***	
Assembly instructions on request !	–	MA 129	
Consult supple-mentary label !	RZ 002	RZ 002	

*Colour code	**20** green-yellow	**21** black	**22** red	**23** blue	**24** yellow	**25** green	**26** violet	**27** brown	**28** grey	**29** white	**30** orange	**33** transparent

Lead couplers, suitable for spring-loaded ø 2 mm and ø 4 mm plugs.
All ø 2/2, 2/4, 4/4 mm combinations are available.

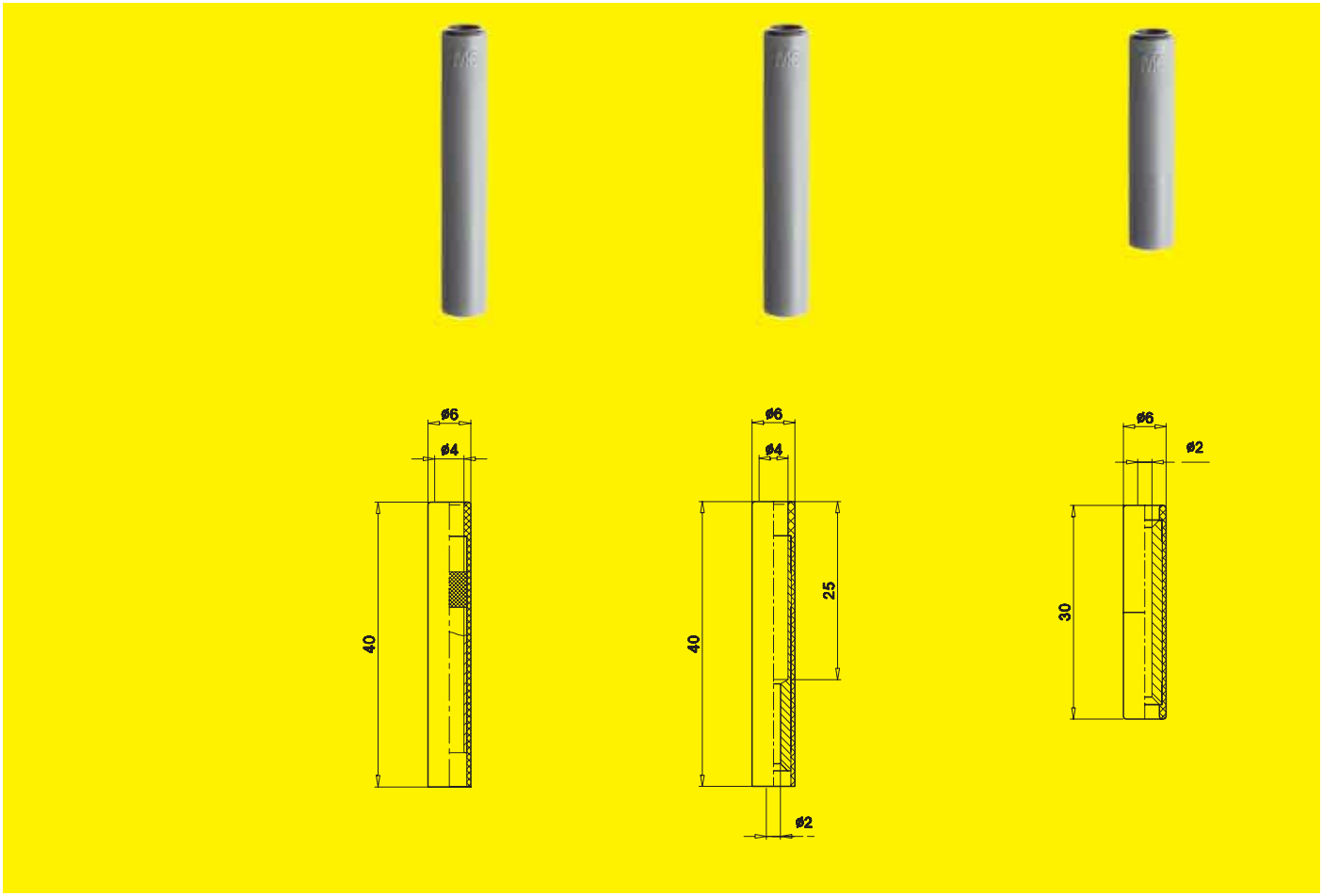

Type	KK4/4	KK2/4	KK2/2
	1000 V, CAT II	These adapters – even in conjunction with safety test leads – can only be used at a rated voltage of 30 V_{AC} / 60 V_{DC} !	
Rated current	32 A	19 A	15 A
Insulation	PA	PA	PA
Operating temperature	-40°C ... +80°C	-40°C ... +80°C	-40°C ... +80°C
Metal parts, plating	brass, gold-plated	brass, gold-plated	brass, gold-plated
Connectable spring-loaded plugs	two ø 4 mm (safety) plugs	ø 2 mm plug and ø 4 mm (safety) plug	two ø 2 mm plugs
Standard colours*	21 - 24	21 - 24	21 - 24
Order No.	**24.0142-***	**24.0141-***	**24.0140-***

Consult supplementary label !	RZ 006	RZ 002	RZ 002

*Colour code	20	21	22	23	24	25	26	27	28	29	30	33
	green-yellow	black	red	blue	yellow	green	violet	brown	grey	white	orange	transparent

Reducer adapters can be used in any ø 4 mm socket to reduce it to ø 2 mm.

Branch plug AZ4/4-2: Tapping from the rear is possible simultaneously with spring-loaded ø 2 mm and ø 4 mm plugs.

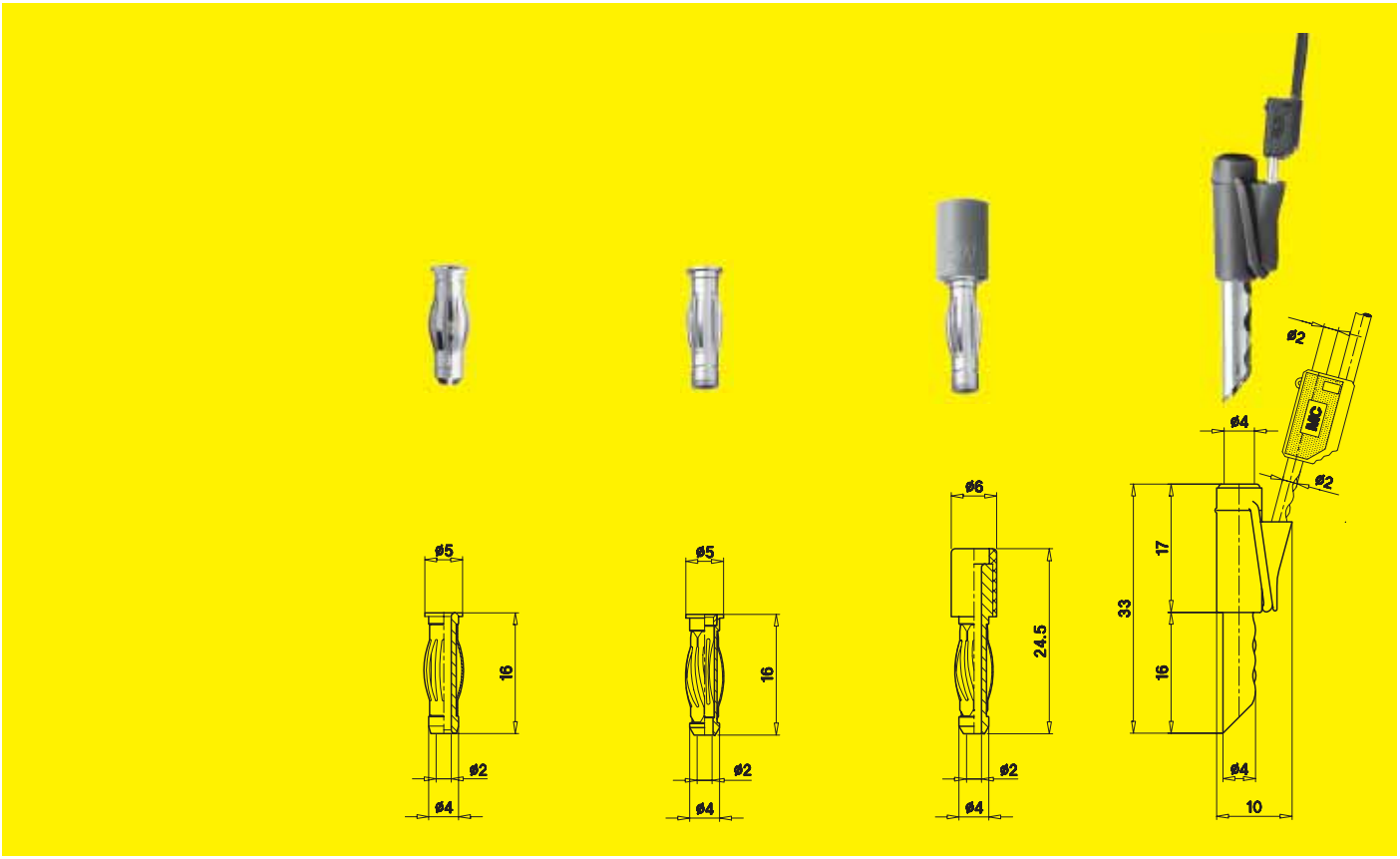

Type	R4/2	R4/2-F	R4/2-A	AZ4/4-2
Rated current	25 A	25 A	25 A	19 A
Transition resistance	< 1.0 mΩ	< 1.0 mΩ	< 1.0 mΩ	< 1.0 mΩ
Insulation	–	–	PA	PVC
Operating temperature	–	–	-40°C ... +80°C	-10°C ... +80°C
Metal parts, plating	brass, gold-plated	brass, gold-plated	brass, gold-plated	hard-drawn copper alloy, gold-plated
Design	ø 4 mm Multilam plug (Multilam version “straight”), uninsulated ø 2 mm rigid socket at rear	ø 4 mm Multilam plug (Multilam version “twisted”), uninsulated ø 2 mm socket at rear	ø 4 mm Multilam plug (Multilam version “twisted”), insulated ø 2 mm rigid socket at rear	ø 4 mm branch plug (hollow plug) with rear tapping with spring-loaded ø 2 mm and ø 4 mm plugs
	A	A	A	A
Standard colours*	–	–	21 - 24	21 - 29
Order No.	**24.0110**	**24.0107**	**24.0106-***	**22.3000-***

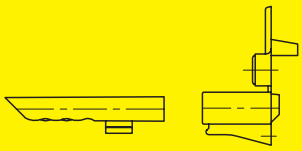

LS4 KT4-A

Insulator	Not available as separate parts !	**KT4-A Order No. 22.2050-***
Plug		**LS4 Order No. 22.1005**

*Colour code	**20** green-yellow	**21** black	**22** red	**23** blue	**24** yellow	**25** green	**26** violet	**27** brown	**28** grey	**29** white	**30** orange	**33** transparent

Adapters for connecting to conventional ø 2 mm and ø 4 mm rigid sockets.

Versions available fitted at rear with rigid ø 4 mm safety sockets, rigid ø 2 mm socket or spring-loaded socket for insertion of connecting wires up to ø 0.76 mm.

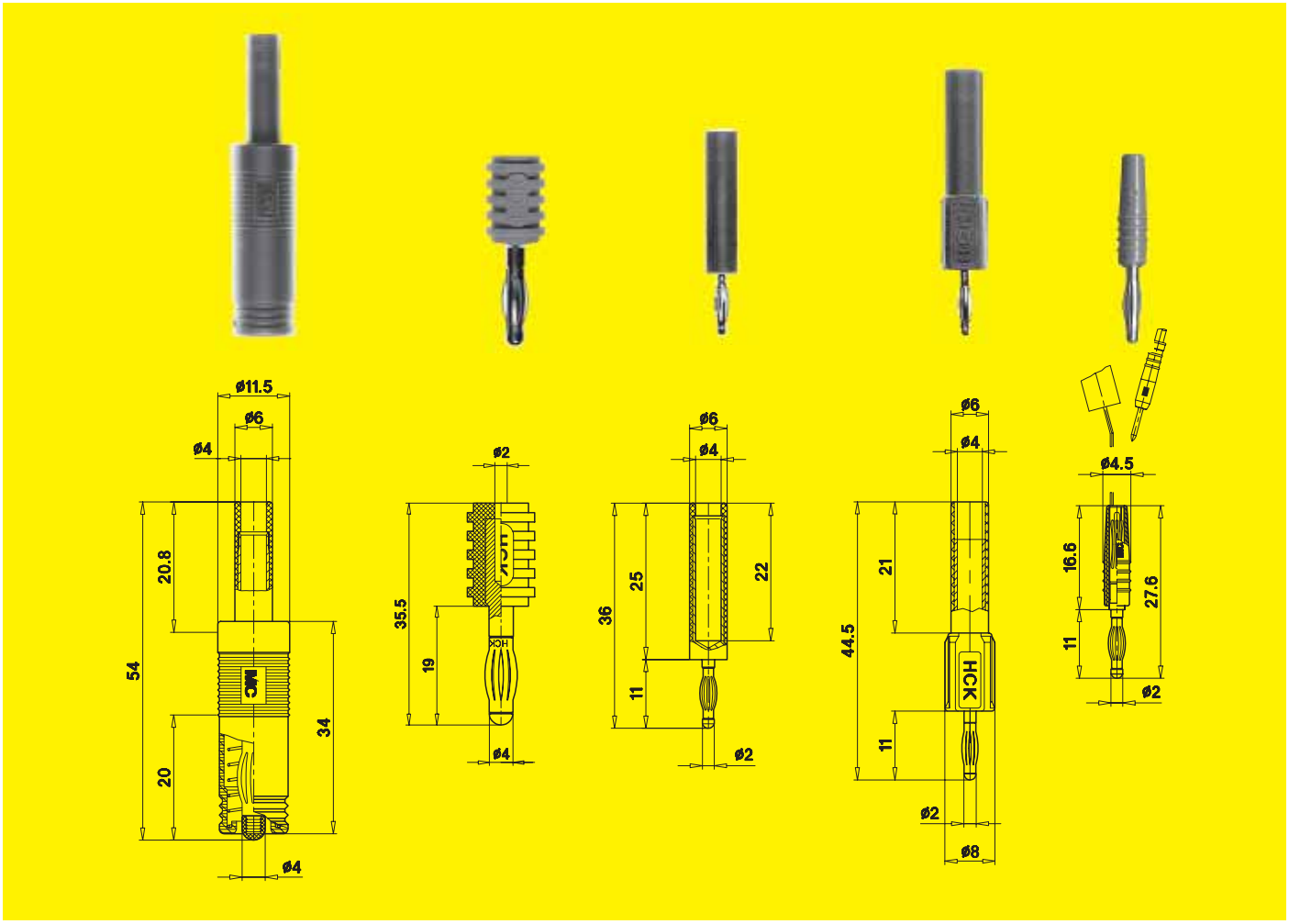

Type	A4/4-Z	AS-2/4	A2/4	RS-4/2A	KH2
	These adapters – even in conjunction with safety test leads – can only be used at a rated voltage of 30 V_{AC} / 60 V_{DC} !				
Rated current	25 A	10 A	10 A	10 A	10 A
Contact resistance	0.8 mΩ	0.8 mΩ	0.6 mΩ	0.8 mΩ	0.8 mΩ
Insulation	PA	PA	PA	PA	PA
Operating temperature	-40°C ... +80°C	-40°C ... +80°C	-40°C ... +80°C	-40°C ... +80°C	-40°C ... +80°C
Metal parts, plating	brass, nickel-plated	machined brass, nickel-plated	brass, gold-plated	brass, nickel-plated	brass, gold-plated
Connection at front	spring-loaded ø 4 mm plug with retractable insulating sleeve	spring-loaded ø 4 mm plug	spring-loaded ø 2 mm plug	spring-loaded ø 2 mm plug	spring-loaded ø 2 mm plug
Rear connection	rigid ø 4 mm safety socket	rigid ø 2 mm socket	rigid ø 4 mm safety socket	rigid ø 4 mm safety socket	spring-loaded socket for component wires up to ø 0.76 mm
	Ⓐ ⚠	Ⓐ	Ⓐ ⚠	Ⓐ	Ⓐ
Standard colours*	red	21 - 23	21 - 24	21 - 23	21 - 29
Order No.	**24.0116-22**	**64.9227-***	**24.0115-***	**63.9226-***	**24.0120-***

Consult supplementary label ! ⚠	RZ 002	–	RZ 002	–	–

*Colour code	20	21	22	23	24	25	26	27	28	29	30	33
	green-yellow	black	red	blue	yellow	green	violet	brown	grey	white	orange	transparent

Two or Four–Wire Measurements?

The electrical resistance ranges from Micro-Ohm to Giga-Ohm. Measurements in the range of Ohm and Mega-Ohm can usually be realised by a multimeter and the conventional two-wire measurement.

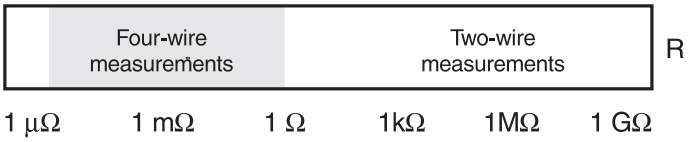

The internal resistance of the circuits and the contact connections may adversely affect the results of measurements at very small resistance below 1 Ohm down to the Micro-Ohm area. The four circuits of Kelvin measurement compensates this error and is therefore especially suitable for the measurement of smallest resistance. The accuracy reaches 0.01 %.

Principle of the Four-Wire Measurement

A defined current $I_{constant}$ flows through the resistance R, coming from a constant current source. The voltage U over the resistance R can be very accurately measured, as due to the high inner resistance of the voltmeter, the voltage drop on the circuits can be disregarded. According to the Ohm's law $R = U / I_{constant}$.

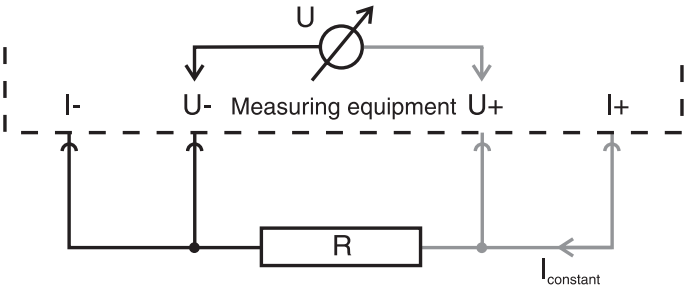

Specimen

R-, L- and C-components in wired or SMD-form, contact components.

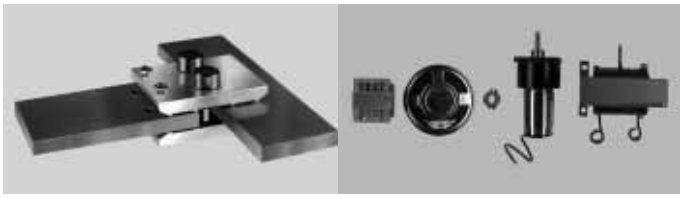

Examples:
small ferrites, small windings, motors, transmitters, mains transformers, high voltage transformers, spooling, ignition systems in automotive sector and for models, busbar bridges.

Very Practical

For four-wire measurements we have developed the special Kelvin clamp. When opened, the shanks of the Kelvin clamp are insulated to each other.

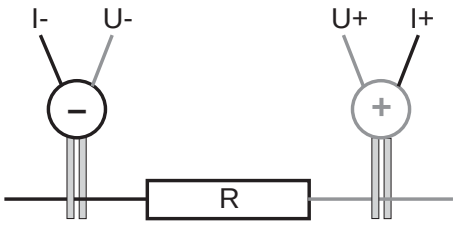

Only 2 clamps are needed to make the connections. Application is just as easy as with two-wire measurements.



Four-wire measurement with only two clamps.

Shielding

In practice, test bridges are often fed with AC voltages within the medium frequency range (a few kHz). To avoid interference, in such test circuits the feed leads to the Kelvin clamps should be shielded.

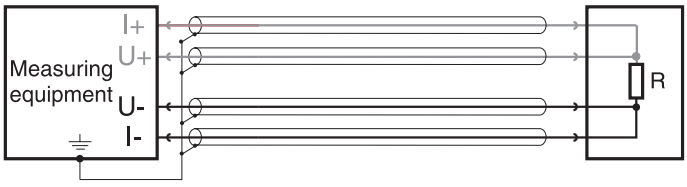

Assembled Kelvin Test Leads

Due to the large number of different applications we supply Kelvin test leads with clamps in different versions.
The connection to the test instrument is made with ø 4 mm plugs or BNC plugs. The shields of the employed coaxial leads are brought together in a shielding box, and if required can be grounded by means of an earthing lead included in the delivery. The Kelvin clamps and connectors are gold-plated and offer low contact resistance and resistance against corrosion. The insulating parts of all Kelvin clamps and connecting plugs are coloured red and black for easier identification.

*Colour code	**20**	**21**	**22**	**23**	**24**	**25**	**26**	**27**	**28**	**29**	**30**	**33**
	green-yellow	black	red	blue	yellow	green	violet	brown	grey	white	orange	transparent

Kelvin test lead. The contact force is exerted by insulated O-rings made of ozone-resistant material. The shields of the employed coaxial leads are brought together in a shielding box, and if required can be grounded by means of an earthing lead included in the delivery.

Lead with Kelvin clamp in small version, also usable in small installation spaces and casings.
The low weight of the clamp places little strain on the point of measurement. Typical applications are measurements on miniature coils, windings, contact surfaces and pins.

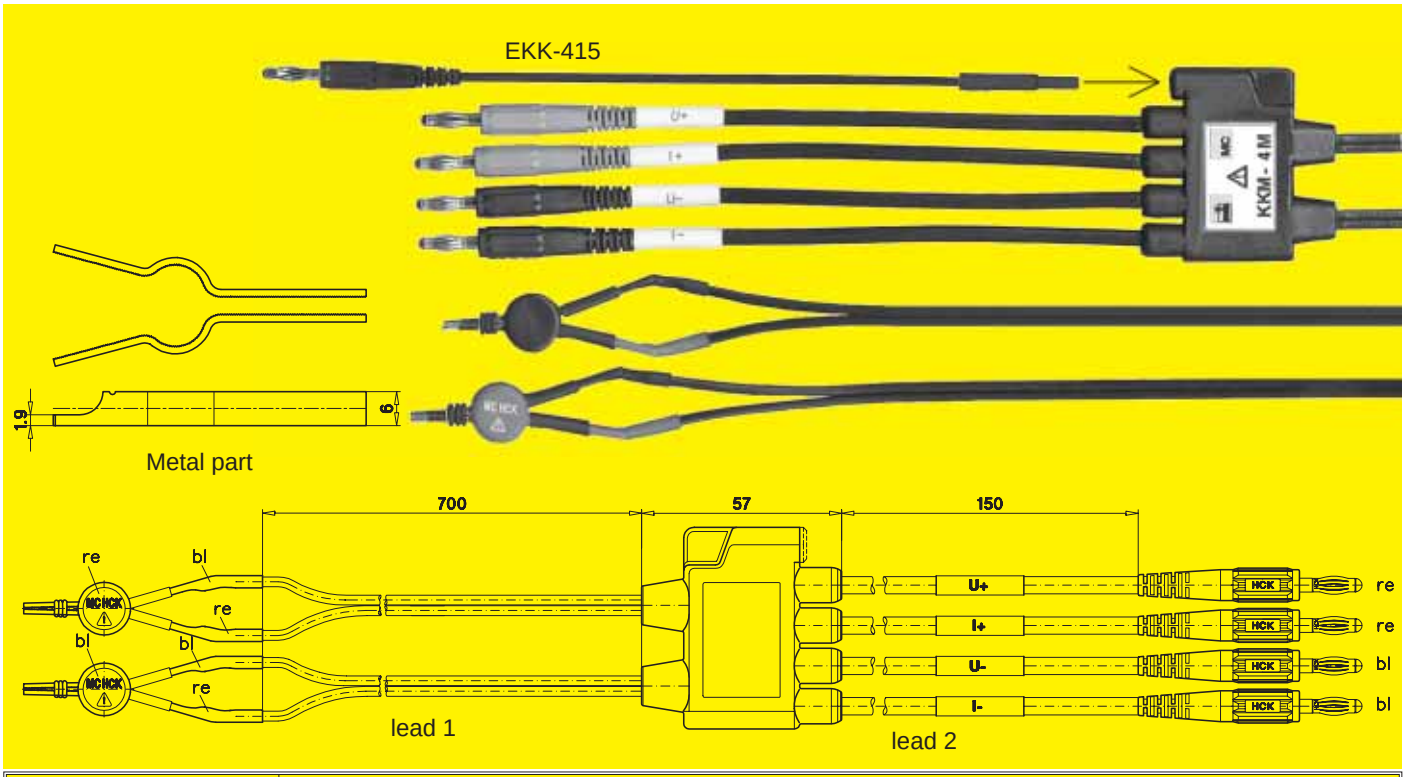

Type	KKM-4M
Coaxial wire	lead 1: 2 x RG-174U (twin wire, black) lead 2: 4 x SILI-SC 0,5/1,0, black
Terminal	instrument side: 4 x ø 4 mm plug shielding box: ø 2 mm safety socket
Insulation / operating temperature	Kelvin clamp: PA / -40°C ... +80°C ø 4 mm plug: PA / -40°C ... +80°C lead 1: PVC / -10°C ... +70°C lead 2: Silicone / -80°C ... +150°C
Metal parts, plating	brass, gold-plated
Lead length (lead 1)	70 cm
Order No.	**64.3429-070**
User information	MA 525

Accessory

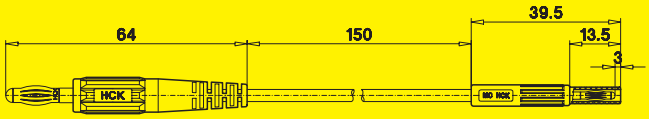

Type	Earth lead, **type EKK-415**
Lead cross section	0.75 mm^2 (Type SILI-1V 0,75/3,2)
Terminals	ø 4 mm plug (connection to the measuring equipment) ø 2 mm plug (connection to the shielding box)
Insulation / operating temperature	plug: PA / -40°C ... +80°C lead: Silicone / -80°C ... +150°C
Metal parts, plating	brass, gold-plated
Lead length	15 cm
Standard colour*	black
Order No.	**64.3433-01521**

*Colour code	**20**	**21**	**22**	**23**	**24**	**25**	**26**	**27**	**28**	**29**	**30**	**33**
	green-yellow	black	red	blue	yellow	green	violet	brown	grey	white	orange	transparent

Kelvin test leads. The contact force is exerted by insulating O-rings made of ozone-resistant material. The shields of the employed coaxial leads are brought together in a shielding box, and if required can be grounded by means of an earthing lead included in the delivery. The Kelvin clamp has insulated clamp halves to prevent touching with the hands and foreign objects. The finely toothed contact inserts allow connection with medium to small diameters.

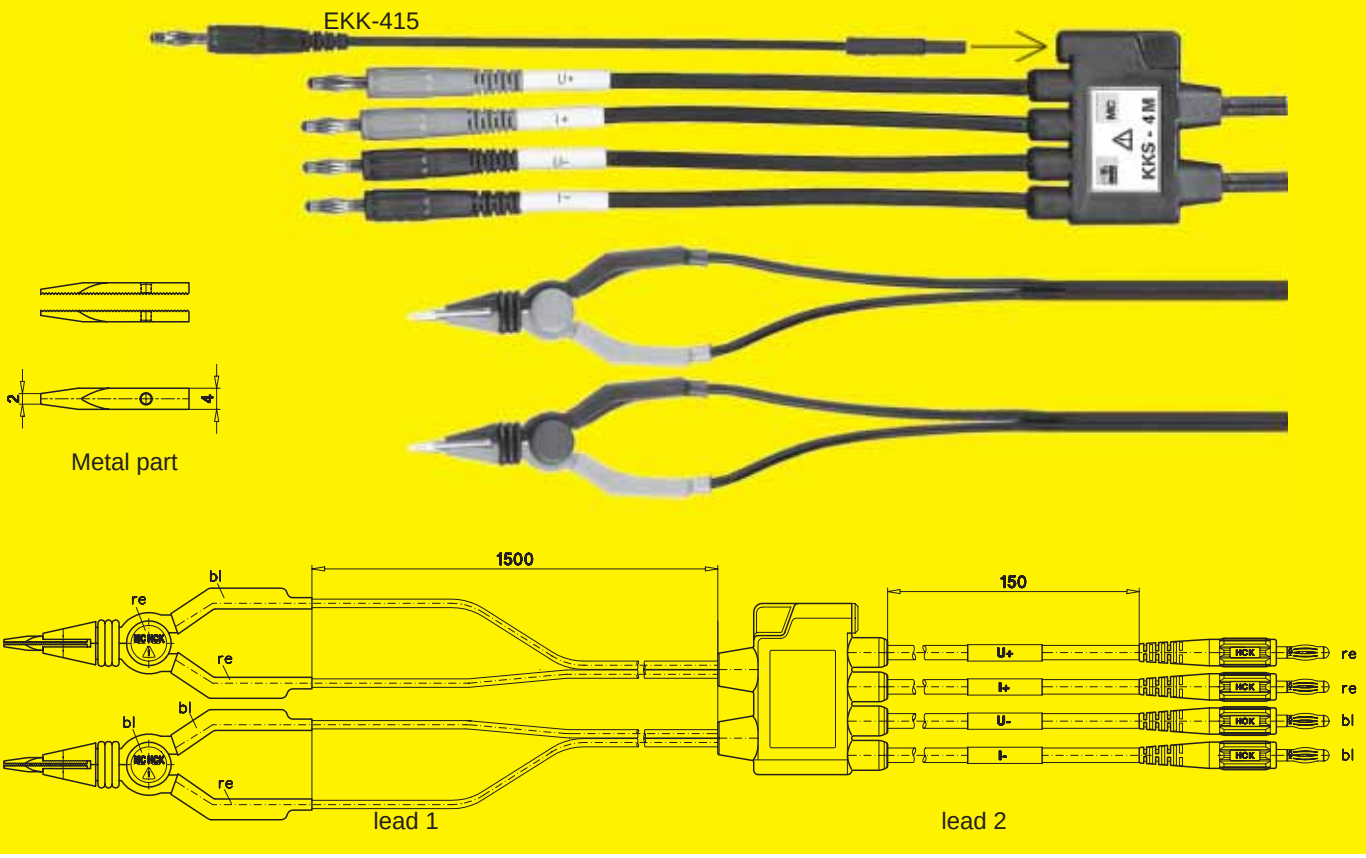

Type	KKS-4M
Coaxial wire	lead 1: 2 x RG-174U (twin wire, black) lead 2: 4 x SILI-SC 0,5/1,0, black
Terminal	instrument side: 4 x ø 4 mm plug shielding box: ø 2 mm safety socket
Insulation / operating temperature	Kelvin clamp: PA / -40°C ... +80°C ø 4 mm plug: PA / -40°C ... +80°C lead 1: PVC / -10°C ... +70°C lead 2: Silicone / -80°C ... +150°C
Metal parts, plating	brass, gold-plated
Lead length (lead 1)	150 cm
Order No.	**64.3445-150**
User information	MA 525

Accessory	Earth lead, see page 119 !

High-precision resistance measurement by the four-pole method using Kelvin leads.



*Colour code	**20**	**21**	**22**	**23**	**24**	**25**	**26**	**27**	**28**	**29**	**30**	**33**
	green-yellow	black	red	blue	yellow	green	violet	brown	grey	white	orange	transparent

Kelvin test tweezers for extremely fine test and measuring operations on small components. Connection to the test instrument is made, according to choice, with a BNC plug or a ø 4 mm-plug. If required, the shielding of the employed four-pole lead can be grounded via the ø 2 mm socket using an earthing lead included in the delivery. Tweezers with ribbed outer profile to provide a non-slip grip in the defined handling area. Precise guidance of contact arms. Supplied in red and black. Versions with two tweezers in which each arm is provided with only one contact.

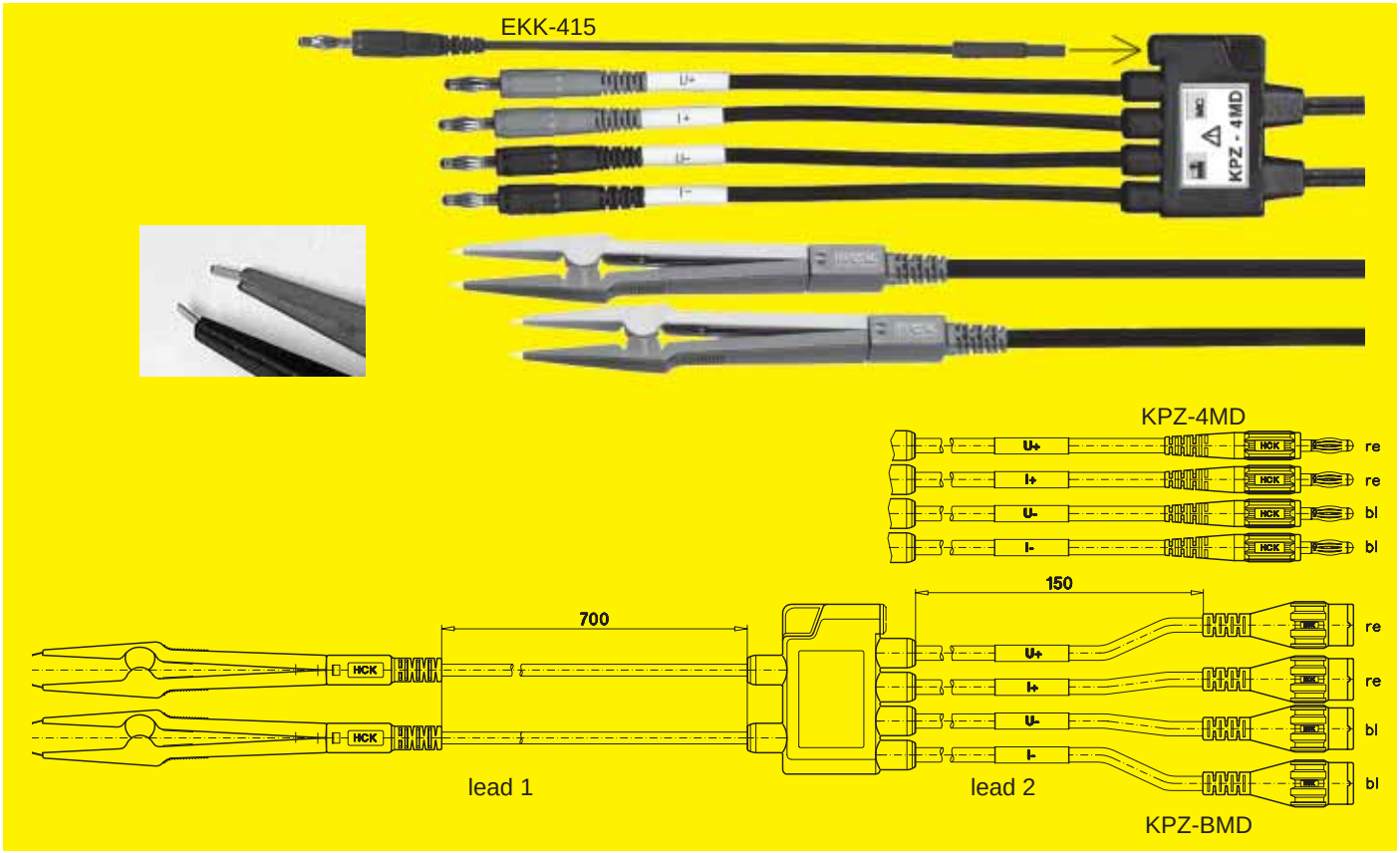

Type	KPZ-BMD	KPZ-4MD
Rated current	1 A	1 A
Design	two tweezers with one contact per arm	
Leads	lead 1: four-pole wire, black lead 2: 4 x coaxial wire (type SILI-SC 0,5/1,0, black)	
Terminal, on equipment	4 x BNC plug connector, fully insulated	4 x ø 4 mm plug
Terminal, shielding box	ø 2 mm safety socket	ø 2 mm safety socket
Insulation / operating temperature	CE test tweezers: PA / -40°C ... +80°C plug: PA / -40°C ... +80°C lead 1: Silicone / -80°C ... +150°C lead 2: Silicone / -80°C ... +150°C	
Metal parts, plating	brass, gold-plated	brass, gold-plated
Lead length (lead 1)	70 cm	70 cm
Order No.	**67.3431-070**	**64.3432-070**
User information	MA 525	MA 525

Accessory	Earth lead, see page 119 !





Test tweezers for extremely fine test connections

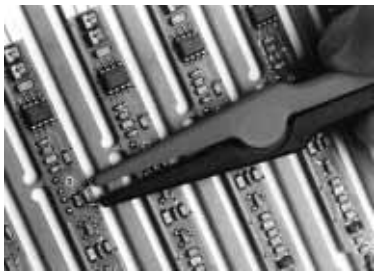

*Colour code	20	21	22	23	24	25	26	27	28	29	30	33
	green-yellow	black	red	blue	yellow	green	violet	brown	grey	white	orange	transparent

Kelvin test tweezers for extremely fine test and measuring operations on small components. Connection to the measuring instrument is made, according to choice, with a BNC plug or a ø 4 mm-plug. If required, the shielding of the employed four-pole lead can be grounded via the ø 2 mm socket using the earthing lead included in the delivery.

Tweezers with ribbed outer profile to provide a non-slip grip in the defined handling area. Precise guidance of contact arms. Supplied in red and black. Versions with single tweezers having an electrically conducting connection between the two contacts of each arm to ensure good contact with the components at the tip.

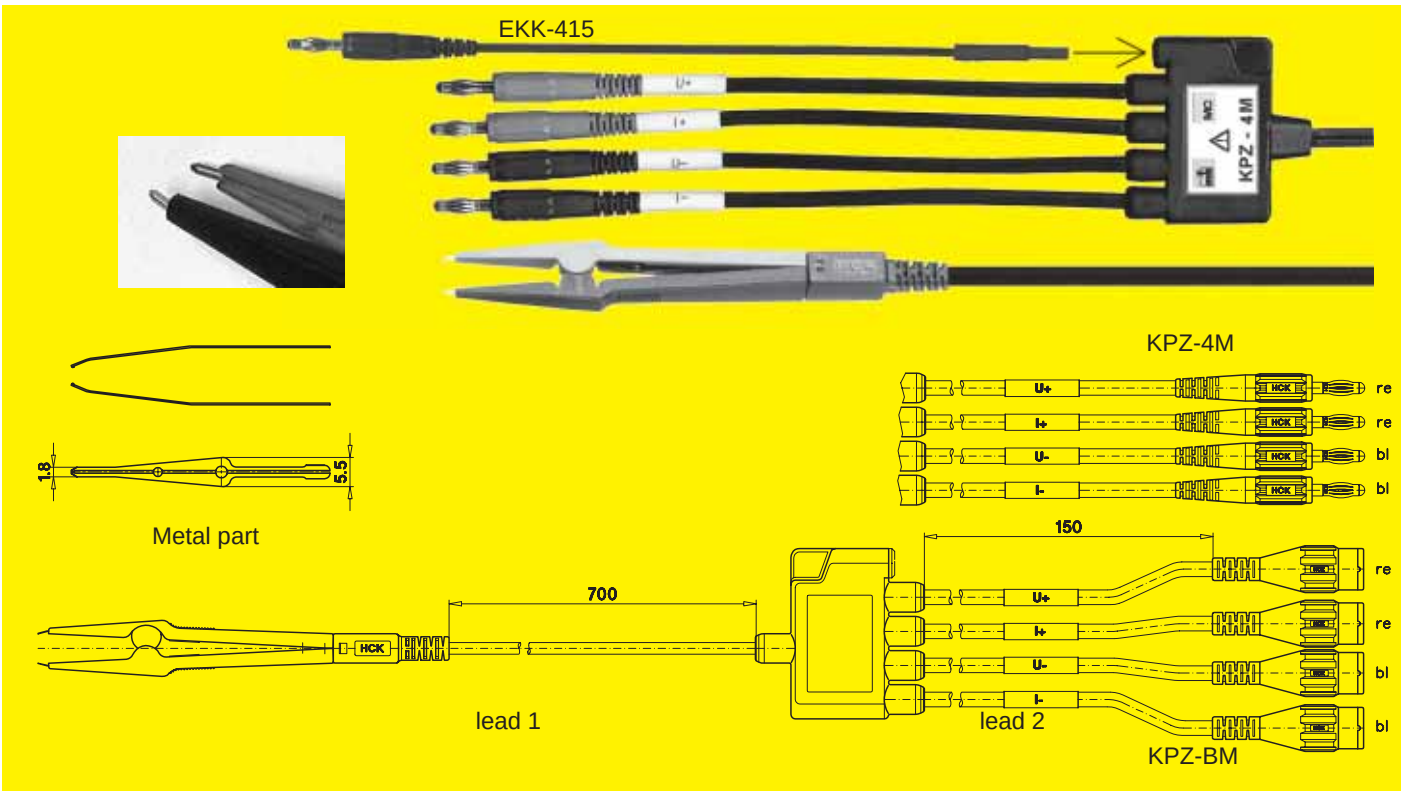

Type	KPZ-BM	KPZ-4M
Rated current	1 A	1 A
Design	1 tweezers with 2 contacts per arm	
Leads	lead 1: four-pole wire, black lead 2: 4 x coaxial wire (type SILI-SC 0,5/1,0, black)	
Terminal, on equipment	4 x BNC plug connector, fully insulated	4 x ø 4 mm plug
Terminal, shielding box	ø 2 mm safety socket	ø 2 mm safety socket
Insulation / operating temperature	CE test tweezers: PA / -40°C ... +80°C plug: PA / -40°C ... +80°C lead 1: Silicone / -80°C ... +150°C lead 2: Silicone / -80°C ... +150°C	test tweezers: PA / -40°C ... +80°C plug: PA / -40°C ... +80°C lead 1: Silicone / -80°C ... +150°C lead 2: Silicone / -80°C ... +150°C
Metal parts, plating	brass, gold-plated	brass, gold-plated
Lead length (lead 1)	70 cm	70 cm
Order No.	**67.3480-070**	**64.3430-070**
User information	MA 525	MA 525

Accessory	Earth lead, see page 119 !



Specially made versions on request

Different types of Kelvin clamps, connecting leads and plugs can be combined in a wide variety of ways. If for your special application you need an assembly that is not offered here – even if it uses components not listed in this catalogue – we will get together with you to find a solution.

Please get in touch with us !

Example of specially made version:
Large, robust Kelvin clamps, connecting leads with reinforced fabric sleeve and ø 4 mm plug.

*Colour code	**20** green-yellow	**21** black	**22** red	**23** blue	**24** yellow	**25** green	**26** violet	**27** brown	**28** grey	**29** white	**30** orange	**33** transparent

Mounting receptacles to equip test and work stations for the protection from electrostatic charging. The receptacles can be screw-mounted or pressed in predrilled panels or housings. The receptacles are to be used at test and work stations, as well as with earthing clip bracelets, which have to be protected from electrostatic discharges, or to make earthing connections between test stations. For connections with panel mounting receptacles we recommend connecting leads LK410-B and LK425-B (see page 70) or our touch-proof special leads SLK425-..T/N, see catalogue Lab Si.

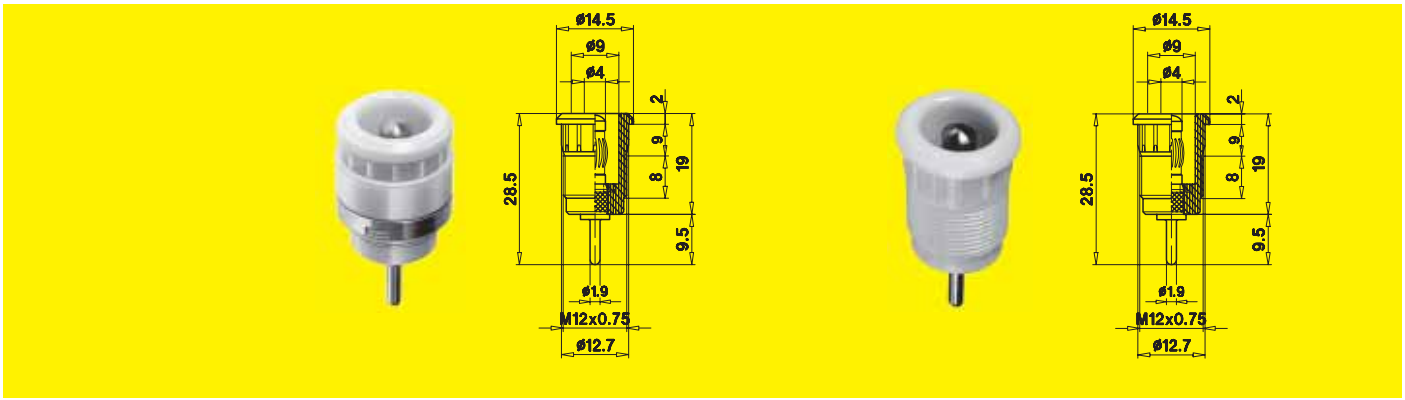

Type	ESD-ID/S4-S	ESD-ID/S4
Rated current	25 A (for use as earthing socket)	25 A (for use as earthing socket)
Insulation	PA	PA
Operating temperature	-40°C ... +80°C	-40°C ... +80°C
Metal parts, plating	brass, nickel-plated	brass, nickel-plated
Assembly	screw-in version	press-in version
Terminal	round connecting pin ø 1.9 mm	round connecting pin ø 1.9 mm
Drill hole	ø 12.8 ± 0.1 mm	ø 12.2 ± 0.1 mm
Panel thickness	Clamping distance with spacer: 1 mm - 4 mm Clamping distance without spacer: 6 mm - 9 mm	metal panel: > 1 mm plastic panel: > 2 mm
Standard colour*	yellow	yellow
Order No.	**24.0122-24**	**24.0121-24**

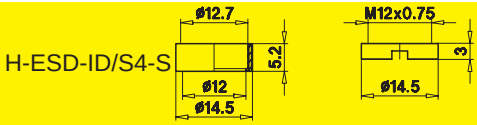

Assembly material	round nut **MUR-S/M12x0,75, Order No. 23.5116,** spacer sleeve **H-ESD-ID/S4-S, Order No. 24.5184**	—
Assembly tools	**SS2** (twist stop spanner), **Order No. 25.0022** **SS425** (for round nut), **Order No. 25.0020**	**MB4-ESD 25.0034**
Drill	HSS ø 12.8 mm	**HSS ø 12,2 mm, Order No. 25.0043**
Connection aids	round connecting receptacle (Au) **RSH ø 1,9 mm, Order No. 23.5202**	
Assembly instructions	MA 113	MA 112

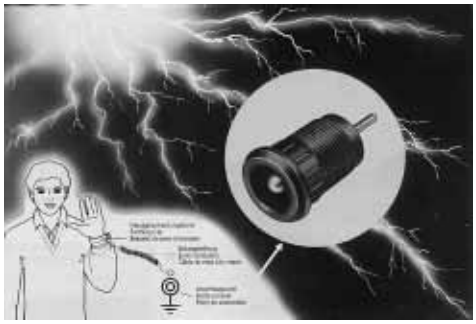

The mounting receptacle is a part of the safety system at test and work stations to prevent electrostatic.

Electrostatic charges are phenomena that create costly problems in many different industries. Static electricity and its effects have become one of the most serious problems facing makers and users of electrical components and equipment, therefore special precautions have to be taken to prevent the damage it can cause. To this subject we would like to draw your attention to the document:
"**Safety requirements for armband earthing clips** (Draft 6/92)"

Publisher:
Berufsgenossenschaft der Feinmechanik und Elektrotechnik
Gustav-Heinemann-Ufer 130
D - 50968 Köln

These requirements must be followed !

*Colour code	**20**	**21**	**22**	**23**	**24**	**25**	**26**	**27**	**28**	**29**	**30**	**33**
	green-yellow	black	red	blue	yellow	green	violet	brown	grey	white	orange	transparent

The following pages show cable which is used for the assembly of our test, connection and adapter leads.
It represents only a small selection from our vast range of highly flexible wire.

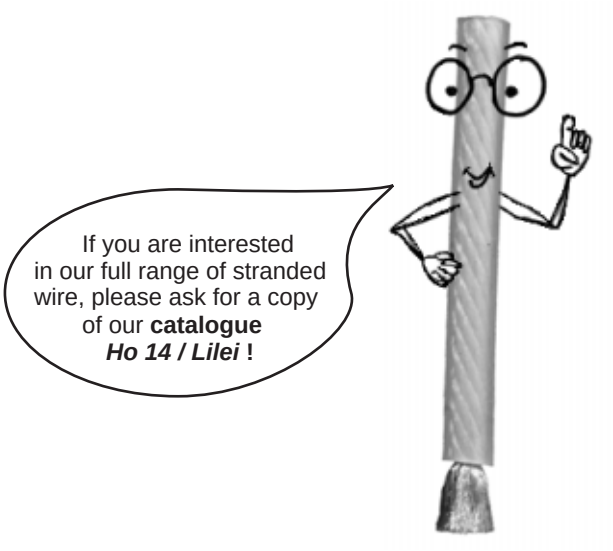

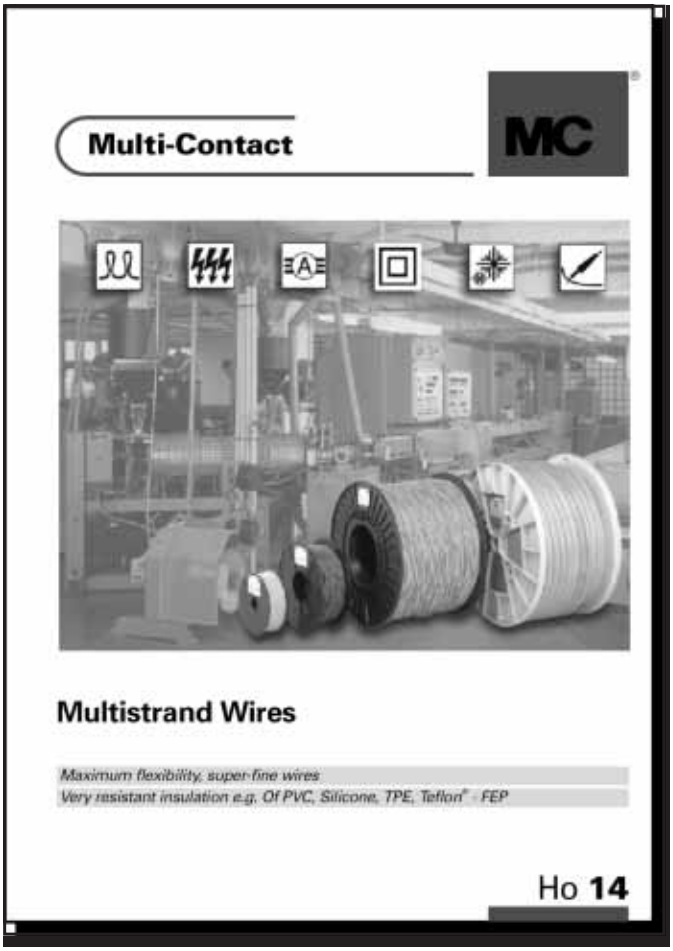

Wire Structure

The basis of our multistrand wires are the very thin strands of soft electrolytic copper wire which consist of several hundreds and up to several thousands of individual wires, depending on the cable cross section.
The individual wires have diameters from 50 µm up to 100 µm. These fine wires being stranded with very short turns, i. e. many coils around the longitudinal axis per unit of length, together with the very elastic insulation materials, results in an extremely high flexibility of the finished leads.

PVC Insulation

The PVC insulation used for our test leads etc. is especially designed for electrotechnical applications. It shows good mechanical properties and long term reliability and is completely flexible at temperatures of -10°C ... +70°C.

Silicone Insulation

Our Silicone insulation is **halogen-free** and thus environment-friendly. It shows good chemical properties and long term reliability, high impact value, maximum elongation and tear strength.
The Silicone we use in our extrusion plant displays long-term thermal stability between -80°C and 150°C and for a short time can even cope with up to 300°C (contact with soldering iron).
An additional safety aspect of Silicone insulation is that when burnt the remaining framework of Silicone ashes is also a good insulator. In the event of fire it is important that electrical installations in industrial plants etc. continue to function.

TPE Insulation (interlaced)

For our Thermoflex leads we use a sturdy TP elastomer with very good electrical, mechanical and thermal properties.
Temperature range:
-30°C ... 90°C (permanent)
up to 120°C (for max. 10 minutes)
up to 300°C (for max. 10 sec., contact with soldering iron)

*Colour code	**20** green-yellow	**21** black	**22** red	**23** blue	**24** yellow	**25** green	**26** violet	**27** brown	**28** grey	**29** white	**30** orange	**33** transparent

	Flexivolt®-E			
Type	**HK 0,127**	**FLEXI-E/HK 0,17**	**FLEXI-E/HK 0,25**	**FLEXI-E/HK 0,50**
Nominal voltage	50 V	50 V	300 V	500 V
Nominal current	3 A	4 A	6 A	10 A
Nominal cross section	0.127 mm² AWG: ~ 26	0.17 mm² AWG: ~ 25	0.25 mm² AWG: ~ 23	0.5 mm² AWG: ~ 20
Strand design	65 x ø 0.05 mm	84 x ø 0.05 mm	129 x ø 0.05 mm	256 x ø 0.05 mm
Insulation	PVC	PVC	PVC	PVC
Temperature range permanent	-10°C ... +70°C	-10°C ... +70°C	-10°C ... +70°C	-10°C ... +70°C
UL-approved as test lead wire	–	–	–	–
Outer diameter of the lead	1.0 mm	1.4 mm	1.4 mm	2.1 mm
	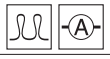			
Standard colours*	21 - 29	21 - 25, 29	21 - 29	20 - 29
Order No.	**22.0060-***	**60.7041-***	**60.7013-***	**60.7005-***

	Flexivolt®-E		
Type	**FLEXI-E/HK 1,0**	**FLEXI-E 1,5**	**FLEXI-E 2,5**
Nominal voltage	750 V	750 V	750 V
Nominal current	19 A	24 A	32 A
Nominal cross section	1.0 mm² AWG: ~ 17	1.5 mm² AWG: ~ 15	2.5 mm² AWG: ~ 13
Strand design	511 x ø 0.05 mm	392 x ø 0.07 mm	651 x ø 0.07 mm
Insulation	PVC	PVC	PVC
Temperature range permanent	-10°C ... +70°C	-10°C ... +70°C	-10°C ... +70°C
UL-approved as test lead wire	–	–	–
Outer diameter of the lead	2.7 mm	3.0 mm	3.6 mm
			
Standard colours*	20 - 29	20 - 29	20 - 29
Order No.	**60.7009-***	**60.7010-***	**60.7012-***

	Flexivolt®-2V	
Type	**FLEXI-2V 0,75**	**FLEXI-2V 1,0**
Nominal voltage	1500 V	1500 V
Nominal current	15 A	19 A
Nominal cross section	0.75 mm² AWG: ~ 18	1.0 mm² AWG: ~ 17
Strand design	196 x ø 0.07 mm	259 x ø 0.07 mm
Insulation	PVC	PVC
Temperature range permanent	-10°C ... +70°C	-10°C ... +70°C
UL-approved as test lead wire	up to +60°C (AWM 10292)	up to +60°C (AWM 10292)
Outer diameter of the lead	3.5 mm	3.9 mm
	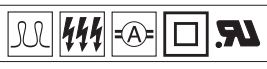	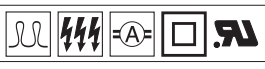
Standard colours*	21 - 27, 29	20 - 27, 29
Order No.	**60.7028-***	**60.7030-***

*Colour code	**20** green-yellow	**21** black	**22** red	**23** blue	**24** yellow	**25** green	**26** violet	**27** brown	**28** grey	**29** white	**30** orange	**33** transparent

	Flexiplast®-E	
Type	**PLAST-E 1,0**	**PLAST-E 2,5**
Nominal voltage	750 V	750 V
Nominal current	19 A	32 A
Nominal cross section	1.0 mm² AWG: ~ 17	2.5 mm² AWG: ~ 13
Strand design	259 x 0.07 mm	651 x 0.07 mm
Insulation	TPE	TPE
Temperature range permanent	-30°C ... +110°C	-30°C ... +110°C
UL-approved as test lead wire	–	–
Outer diameter of the lead	2.7 mm	3.6 mm
	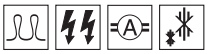	
Standard colours*	21 - 27, 29	21 - 27, 29
Order No.	**60.7190-***	**60.7200-***

	Silivolt®-E			Silivolt®-1V	
Type	**SILI-E 0,50**	**SILI-E 1,0**	**SILI-E 2,5**	**SILI-1V 0,75**	**SILI-1V 1,0**
Nominal voltage	300 V	600 V	600 V	1500 V	1500 V
Nominal current	10 A	19 A	32 A	15 A	19 A
Nominal cross section	0.5 mm² AWG: ~ 20	1.0 mm² AWG: ~ 17	2.5 mm² AWG: ~ 13	0.75 mm² AWG: ~ 18	1.0 mm² AWG: ~ 17
Strand design	129 x 0.07 mm	259 x 0.07 mm	651 x 0.07 mm	385 x ø 0.05 mm	511 x ø 0.05 mm
Insulation	Silicone	Silicone	Silicone	Silicone	Silicone
Temperature range permanent	-80°C ... +150°C	-80°C ... +150°C	-80°C ... +150°C	-80°C ... +150°C	-80°C ... +150°C
UL-approved as test lead wire	up to +60°C (AWM 3525)	up to +60°C (AWM 3525)	up to +60°C (AWM 3525)	up to +60°C (AWM 3525)	up to +60°C (AWM 3525)
Outer diameter of the lead	2.3 mm	3.0 mm	3.9 mm	3.5 mm	3.9 mm
					
Standard colours*	21 - 27, 29	20 - 27, 29	20 - 27, 29	20 - 27, 29	20 - 27, 29
Order No.	**61.7552-***	**61.7554-***	**61.7556-***	**61.7606-***	**61.7607-***

	High voltage wire	Thermoflex
Type	**HK18-H**	**HK2,5-D/TF**
Nominal voltage	5000 V	1000 V
Nominal current	16 A	32 A
Nominal cross section	0.82 mm² AWG: ~ 18	2.5 mm² AWG: ~ 13
Strand design	65 x 36 AWG	462 x 0.08 mm
Insulation	PVC	TPE, interlaced
Temperature range permanent	-10°C ... +80°C	-30°C ... +90°C
UL-approved as test lead wire	up to +80°C (AWM 1855)	–
Outer diameter of the lead	3.7 mm	4.0 mm
		
Standard colours*	21 - 22	21 - 26
Order No.	**22.0110-***	**22.0180-***

*Colour code	**20**	**21**	**22**	**23**	**24**	**25**	**26**	**27**	**28**	**29**	**30**	**33**
	green-yellow	black	red	blue	yellow	green	violet	brown	grey	white	orange	transparent

Insulation stripping pincers. Available with automatic or manual adaptation to wire cross-section.



Type	MINI-STRIPAX	STRIPAX	PTS
Wire cross-section range	0.08 mm^2 - 1 mm^2 AWG: 28 - 17	0.5 mm^2 - 4 mm^2 AWG: 20 - 11	0.2 mm^2 - 6 mm^2 AWG: 24 - 9
Adaptation to wire cross-section	automatic	automatic	manual
Cutting tool	wire cutter handles cross-sections up to 1 mm^2	wire cutter handles cross-sections up to 4 mm^2	built-in side cutter, heavy-duty version
Material	PA, glassfibre-reinforced	PA, glassfibre-reinforced	PA, glassfibre-reinforced and painted sheet steel
Overall length	150 mm	200 mm	178 mm
Weight	110 g	145 g	206 g
Order No.	**25.0014**	**25.0015**	**25.0016**

Spare blades	**MINI-STRIPAX/M Order No. 25.5014**	**STRIPAX/M Order No. 25.5015**	–

*Colour code	**20**	**21**	**22**	**23**	**24**	**25**	**26**	**27**	**28**	**29**	**30**	**33**
	green-yellow	black	red	blue	yellow	green	violet	brown	grey	white	orange	transparent

Holder for orderly storage of about 100 connecting and test leads. The wall-mounting holder is 30 cm long and carries 21 plastic brackets.

Distance lugs on the side of the console hooks safeguard a minimum spacing distance. For thinner leads the distance lugs can be removed. The holder is supplied disassembled. See below for parts list.



Type	LKH
Length of the plastic bracket carrier	30 cm
Number of plastic brackets	21 (Type LKH-K)
	Special lengths up to 3 m long available on request. 7 plastic hooks and fixing bolts supplied per 10 cm of holder length.
Depth of single plastic hook	approx. 70 mm
Order No.	**25.0001**

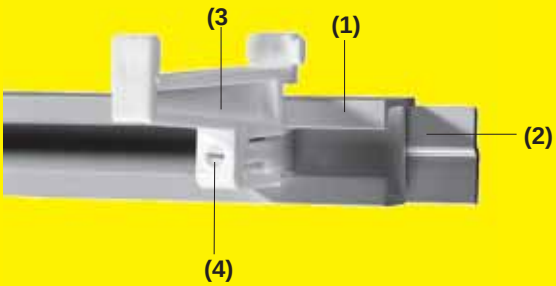



Plastic hook with fixing bolt

Clamp rail (1)	1x **LKH-S**, **25.5004,** anodized aluminium section, 30 cm long
Wood screw	2x **LKH-SCH**, **25.5008**
Wall plug	2x **LKH-D**, **25.5009**
Sheet metal screw	2x **LKH-BSCH**, **25.5010**
Fixing rail (2)	1x **LKH-A**, **25.5001,** anodized aluminium section, 30 cm long
Plastic hook (3)	21x **LKH-K**, **25.5003,** white plastic
Fixing bolt (4)	21x **LKH-B**, **25.5005**
Assembly instructions	MA 101

*Colour code	**20** green-yellow	**21** black	**22** red	**23** blue	**24** yellow	**25** green	**26** violet	**27** brown	**28** grey	**29** white	**30** orange	**33** transparent

Holder for orderly storage of laboratory leads and test leads. C-profile rails of different lengths can be used as a carrier for hanger modules MPK-10. Integral spacers maintain a set spacing of 4 mm.

When necessary, the spacers can be taken away easily to storage leads with smaller diameters. For thicker leads, the holders can be moved accordingly in the C-profile rail.



Type	MH-1/200	MH-1/250	MH-1/330	MH-1/500	MH-1/750	MH-1/1000
Material profile rail	Alu, anodized	Alu, anodized	Alu, anodized	Alu, anodized	Alu, anodized	Alu, anodized
Material of hanger module MPK-10	ABS plastic, black	ABS plastic, black	ABS plastic, black	ABS plastic, black	ABS plastic, black	ABS plastic, black
Standard length	20 cm	25 cm	33 cm	50 cm	75 cm	100 cm
Number of hangers	12	16	21	34	52	69
Order No.	**64.9242-020**	**64.9243-025**	**64.9244-033**	**64.9245-050**	**64.9246-075**	**64.9247-100**

Parts list: profile rail MPS, single hanger MPK-10 with fixing material



Single hanger	**MPK-10** (1 M4 x 20 screw and 1 nut supplied), **Order No. 64.9235**					
C-profile carrier	**MPS-200 64.9236-020**	**MPS-250 64.9237-025**	**MPS-330 64.9238-033**	**MPS-500 64.9239-050**	**MPS-750 64.9240-075**	**MPS-1000 64.9241-100**
Assembly instructions	MA 517					

*Colour code	**20** green-yellow	**21** black	**22** red	**23** blue	**24** yellow	**25** green	**26** violet	**27** brown	**28** grey	**29** white	**30** orange	**33** transparent

Trolley made of anodized aluminium square section tube for orderly storage of connecting and test leads.

2 lead holders, each with 39 plastic brackets.
For efficient packing, the trolley is supplied disassembled.



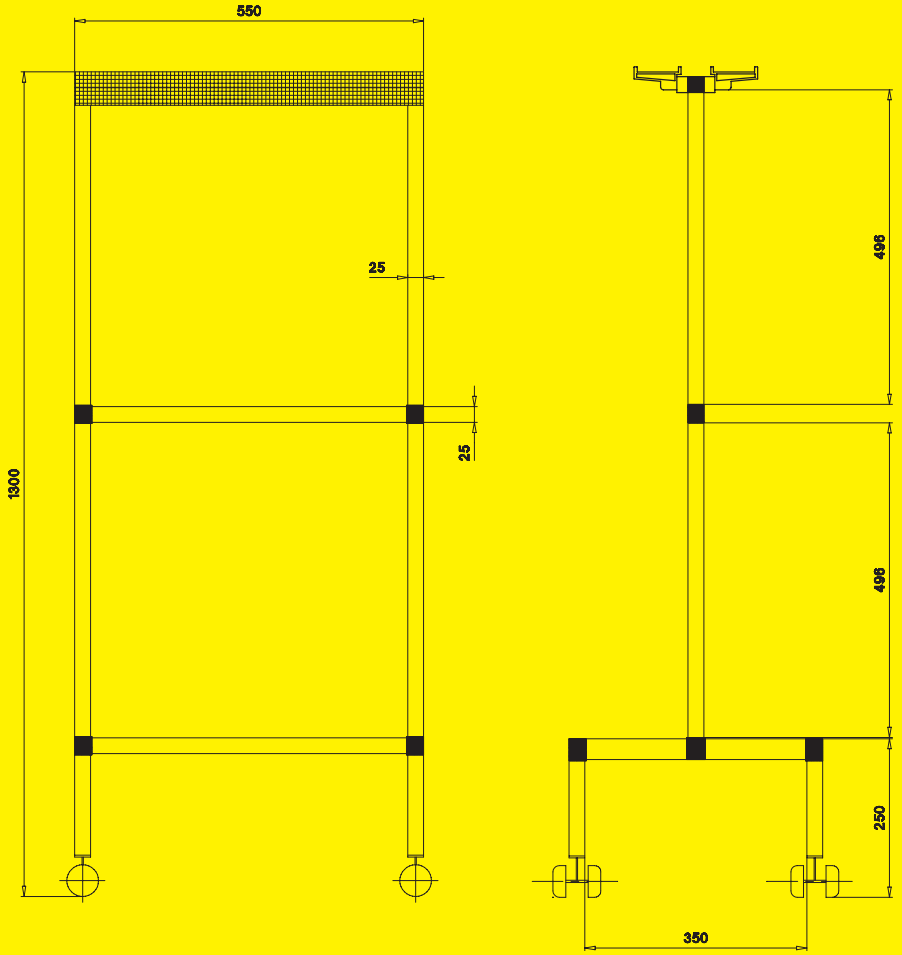

Type	LKW2
Height	130 cm
Width	55 cm
Depth	40 cm
Number of plastic brackets	2 x 39 (Type LKH-K)
	If required an additional lead holder with 39 plastic brackets can be mounted on the middle console.
Depth of single plastic bracket	approx. 70 mm
Weight (empty)	5.2 kg
	The test leads are not supplied !
Order No.	**25.0010**

Assembly instructions	MA 100

*Colour code	**20** green-yellow	**21** black	**22** red	**23** blue	**24** yellow	**25** green	**26** violet	**27** brown	**28** grey	**29** white	**30** orange	**33** transparent

MH-3R:
Mobile test lead stand with three holders.
The stand is mounted on a 5 roller free wheeling carriage.
A metal tray situated between the holders offers a storage place for further accessories which allows a transportation to work stations with everything together.

MH-3PL:
Test lead hanger with three arched bearing surfaces.
In particular suitable for kink sensitive leads and tubing.

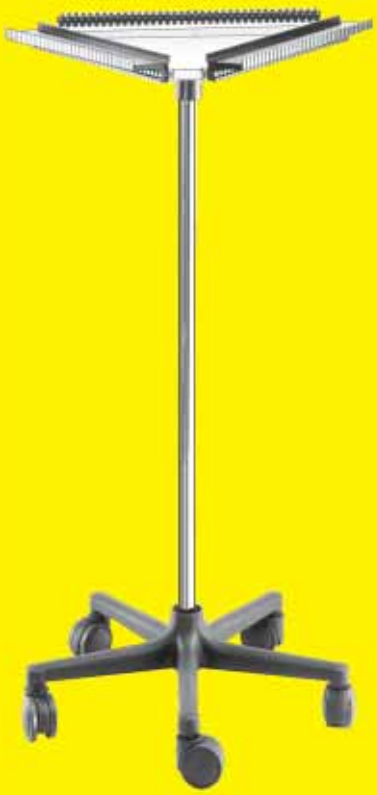



Type	MH-3R
Height	125 cm
Width	each side 63 cm
Number of hangers	3 x 37 (type MPK-10)
	Test leads are not supplied !
Order No.	**64.9251**

Type	MH-3PL
Arc lengths	75 mm / 125 mm / 180 mm
Depth	approx. 50 mm
Material	PS, light grey
Order No.	**69.8001**

Depth of single plastic bracket	approx. 70 mm
Material of hanger module MPK-10	ABS plastic, black
Single hanger	**MPK-10** (1 M4 x 20 screw and 1 nut supplied), **Order No. 64.9235**
Assembly instructions	MA 514



MPK-10

*Colour code	**20** green-yellow	**21** black	**22** red	**23** blue	**24** yellow	**25** green	**26** violet	**27** brown	**28** grey	**29** white	**30** orange	**33** transparent

Experimental kits for setting up experimental circuitry without soldering. The VZP-2.. branching points permit simultaneous connection of one spring-loaded ø 2 mm plug pin and up to six components with wires ranging from ø 0.4 mm to ø 1.0 mm. The connecting wires are held by contact springs.

The branching points are pressed into holes drilled in the test panel with any desired spacing.
The test panels are not delivered by us !
The various VZP2-.. models differ only in the connection at the rear.

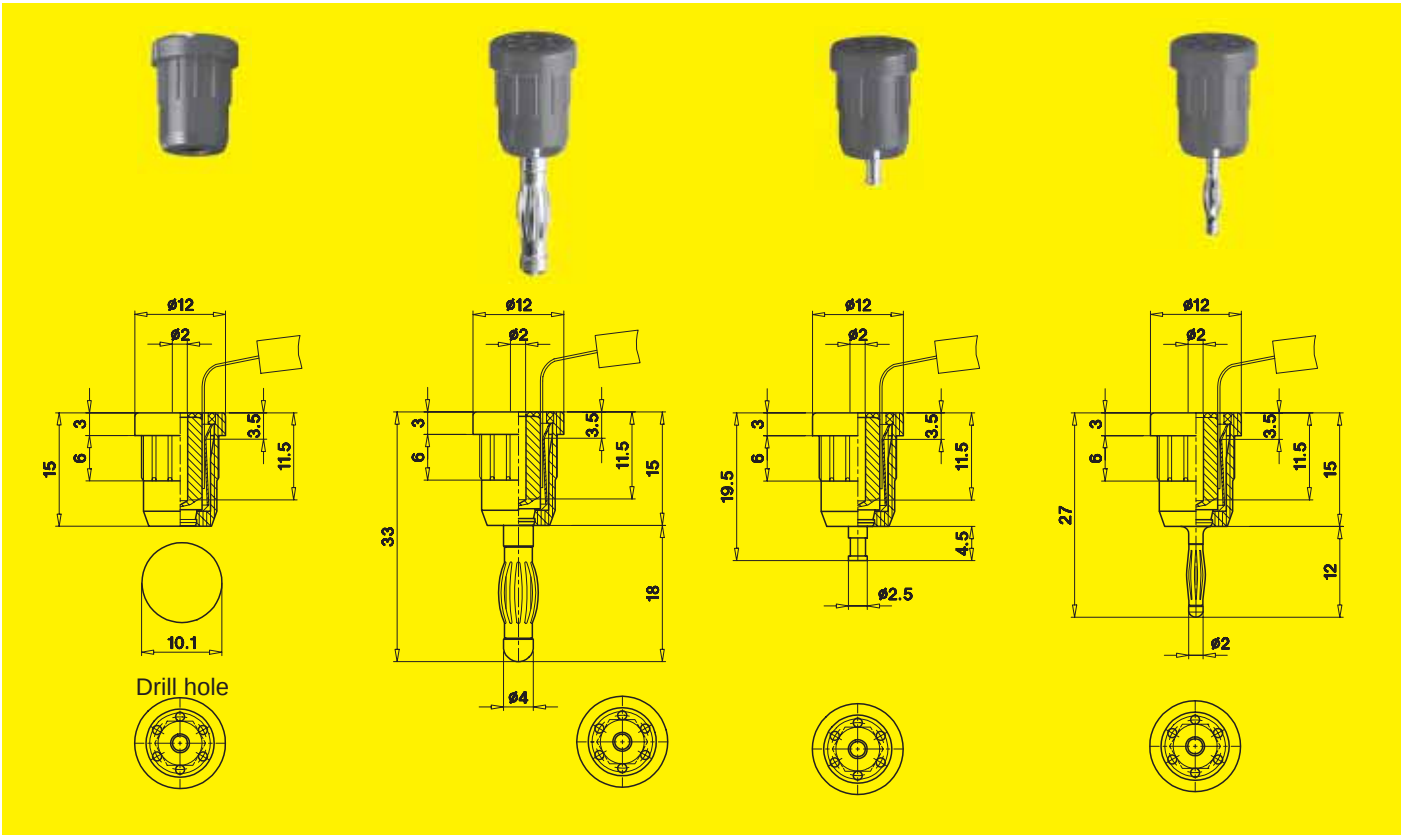

Type	VZP2-A	VZP2-B	VZP2-D	VZP2-E
Metal parts, plating	brass, gold-plated (contact springs: bronze, gold-plated)	brass, gold-plated (contact springs: bronze, gold-plated)	brass, gold-plated (contact springs: bronze, gold-plated)	brass, gold-plated (contact springs: bronze, gold-plated)
Insulation	PA	PA	PA	PA
Operating temperature	-40°C ... +80°C	-40°C ... +80°C	-40°C ... +80°C	-40°C ... +80°C
Diameter of clamped component wire	ø 0.4 mm to ø 1 mm	ø 0.4 mm to ø 1 mm	ø 0.4 mm to ø 1 mm	ø 0.4 mm to ø 1 mm
Rear connection	–	ø 4 mm Multilam plug	solder connection	ø 2 mm Multilam plug
Drill hole	ø $10.1^{+0.1}$ mm	ø $10.1^{+0.1}$ mm	ø $10.1^{+0.1}$ mm	ø $10.1^{+0.1}$ mm
Standard colours*	21 - 22	21 - 22	21 - 22	21 - 22
Order No.	**24.0170-***	**24.0180-***	**24.0195-***	**24.0199-***

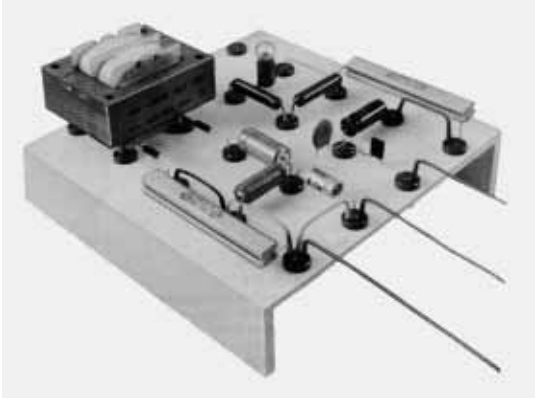

Application:

Test panel with branching points and components.

*Colour code	**20** green-yellow	**21** black	**22** red	**23** blue	**24** yellow	**25** green	**26** violet	**27** brown	**28** grey	**29** white	**30** orange	**33** transparent

Catalogues Lab 1-4 (this catalogue) and Lab Si (safety test accessories) present our complete range of standard products in the laboratory / test accessories field.

Many of our standard articles are available from stock.
Of course we would be pleased to quote on lead combinations not included in the catalogue and on other specials.

Examples of lead combinations:

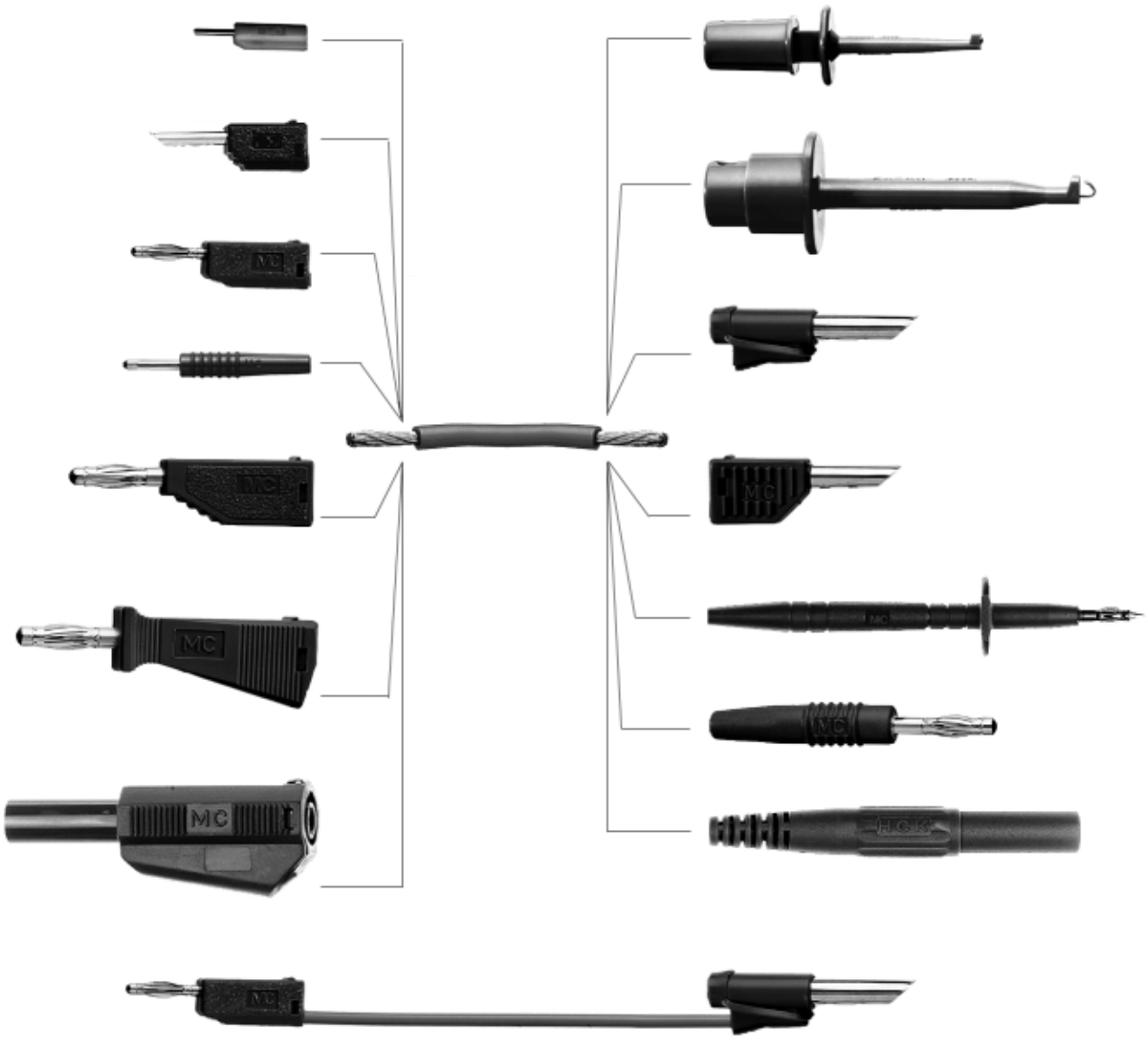

Please state your needs in detail when inquiring !

*Colour code	**20** green-yellow	**21** black	**22** red	**23** blue	**24** yellow	**25** green	**26** violet	**27** brown	**28** grey	**29** white	**30** orange	**33** transparent

Assembly instructions MA
see *Ordering Information, page 2*.

AWG (American Wire Gauge)
The appropriate measurement can be found in the technical data section of the multistrand wire chapter next to the cross sectional area, mm^2.

Basic insulation
Basic insulation is the insulation applied to live parts to provide basic protection against electric shock.

Clearance distance
The clearance distance of electrical equipment with which the user comes into contact is the shortest air gap between a live part and a part of the user's body.

Connecting cycles
refer to plugging-and-unplugging cycles of connectors and plug devices. One plugging / unplugging operation is a connection cycle. The maximum number of connection cycles of the standard plug-in connections is several thousands, depending of duty conditions.
Precondition is a thin film of lubricant on the contacts prior to initial mating. Because higher cycle requirements call for special surface treatment, guiding and lubrication measures, each case must be investigated to establish the specification.

Connectors
are designed to be connected and disconnected in the de-energized condition only.

Contact carrier
is a part made of insulating material for holding and positioning the contact elements in the connector.

Contact resistance
is the resistance occuring at the contact point of two contact areas. Its value is calculated with the measured voltage drop and the rated current in new condition. The technical data here stated are mean values.

Contact surfaces
Because the surfaces of solids are always rough in the physical sense, it is important to achieve a contact surface that is as smooth and metallically pure as possible and affords a large number of contact points in the contact zone. The condition of the contact surfaces has a decisive influence on the contact resistance.

Creepage currents
Creepage currents on the surface of an insulator are created due to perspiration, condensation, pollution or the very small conductivity of the insulating material itself when a voltage is applied.

Creepage distance
The creepage distance of electrical equipment with which the user comes into contact is the shortest distance on the surface of an insulating material between a live part and a part of the user's body. Sufficiently long creepage distances are important for safety, particularly at voltages above 30 V_{AC} / 60 V_{DC}.

Double insulation
Double insulation consists of basic insulation and an additional insulation, so that the secondary insulation offers protection even when the first is damaged.
Double insulation is not required for articles used at voltages not exceeding 30 V_{AC} / 60 V_{DC}. Articles with double or reinforced insulation are denoted by the sign .

Flow soldering
Function of the special contour for flow soldering:

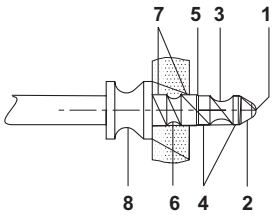

1) Shank tip is sufficiently rounded so as not to cause damage to any insulations.
2) Tapered sides of shank tip. After assembly, gold finish is not damaged, good soldering qualities.
3) Reducing the shank, produces when soldering, a narrow heat transfer pass. The flowing tin in the narrow neck produces a better mechanical adhesion.
4) The shank ø 1 mm can easily be pressed into printed circuit boards. The provisional fit is enough to hold the socket resp. plug.
5) Tapered extension of shank to the press fit ø 1.08 mm.
6) The shank reduction is a narrow heat transfer pass between the soldering tip and the socket resp. plug body.
7) Shank allows a good press fit in the printed circuit board hole.
8) The narrowing of the plug shoulder is for a better mechanical yielding by eventual canting of the plug through misalignment of the socket to the plug. It therefore protects the press fit and solder joint from excessive stress.

Gold plating
Gold has good electrical conductivity and affords unexcelled corrosion protection. Contact resistance is low and constant. A nickel or copper layer is applied as diffusion barrier.

Hollow plugs

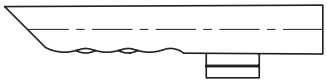

Our sleeve-shaped hard-drawn copper alloy plug with solder tab is rolled, hardened and gold-plated. Due to their very good mechanical and electrical properties, the hollow plugs have been used successfully for nearly four decades and together with the newer Multilam plugs they still occupy an important position in the fabrication of connecting leads. For the many uses of our connecting leads with hollow plugs, *see page 67*.

Insertion and withdrawal force

is the force required to plug in a connector fully or to pull it out without mechanical assistance. Because of the spring loading normally present, the plug-in force is usually greater than the pull-out force.
The forces are determined in a polished steel socket resp. with a polished steel plug.

Insulation coordination

This refers to the concept of determining the creepage, clearance and assembly distances of electrical apparatus with regards to the specific conditions of application.
See also *Overvoltage Category*.

Insulation materials

Listed below are our most commonly used insulation materials:

Insulation material	Typical application	Operating temperature**
ABS	Connecting plug	-10°C ... +70°C
PA (Polyamide)	Insulators	-20°C ... +90°C -25°C ... +70°C -40°C ... +80°C -40°C ... +70°C
PP (Polypropylene)	Insulators	-40°C ... +80°C
PVC (Polyvinylchloride)	Lead insulation Insulators	-10°C ... +70°C -10°C ... +80°C
Silicone	Lead insulation	-80°C ... +150°C
TPE (Thermoplastic elastomer)	Insulators	-40°C ... +80°C -40°C ... +110°C
TPE, interlaced (Thermoplastic elastomer)	Lead insulation	-30°C ... +90°C

**Some insulating materials are supplied in different types specially tailored for a specific application. This can result in some variations in the temperature range. The applicable temperature range is the one stated in the product description.

Kelvin measurement

A four circuit measuring method for measurement of smallest resistances with very high accuracy.
For detailed information, *see page 118*.

Lead length

See *Ordering Information, page 2*.

Level of protection against electric shock

Safety features such as insulation and finger guards are incorporated into the product design to minimize the risk of accidental contact to live parts.
The level of protection is denoted by a maximum voltage rating which is determined by the application in which the product is being used *(rated voltage)*.

Lubricants

To give our connectors optimum protection from wear, we recommend applying a thin film of lubricant to the contacts before the first connection is made.
We recommend the following lubricants
- Synthesin PDL250/1 (Order No. 73.1050) grease
- Kontasynth BA 100 (Order No. 73.1051) spray
from Klüber Lubrication in Munich.

MC Multilam® plug

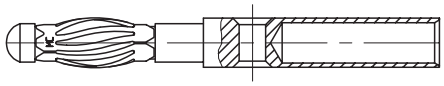

The MC Multilam plug consists of a turned brass pin and the MC Multilams® of hard-drawn copper alloy. The pin and Multilams® are gold-plated, or in some cases nickel-plated. The Multilam® bands are seated spring-loaded in a recess in the metal pin. Their geometry and material have optimal mechanical and electrical properties for effective connections: extremely rugged and crush-proof due to the solid metal pins, highly resistant to vibration in the plugged condition, high current-carrying capacity, minimal contact resistance, low self-heating.
The MC Multilam® connectors generally have a plug at one end and socket at the other. As a result, any number of leads can be connected in series.

MC Multilams®

are special contact elements developed by Multi-Contact with outstanding electrical and mechanical properties. The Multilam® form a contact cage inserted between two contact surfaces. The Multilams® contact the two surfaces at a large number of points, each of which acts as a “bridge” for passage of current.
Most of the MC Multilams® for laboratory use are made of hard-drawn copper alloy and are gold-plated. They have high current-carrying capacity in continuous and intermittent operation and perform very reliably over a broad temperature range.
For detailed information, refer to the publication “*The MC Multilam® Principle*”.

Nickel plating

In cases where electrical specifications are less demanding, nickel-plated contact elements are used. This process is also used frequently to provide a diffusion barrier prior to gold plating.

Panel-mount and press-in sockets

Our sockets are offered in a wide variety of versions: press-in or screw-in designs, insulated or uninsulated, for different types of connections.
Sockets are in most cases rigid types; some are also spring-loaded with the tried and tested Multilam®.

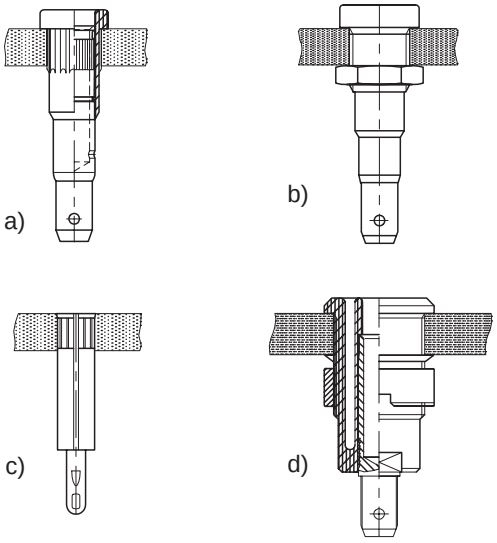

a.) Insulated press-in sockets (rigid and spring-loaded)
b.) Insulated screw-in sockets (rigid and spring-loaded)
c.) Uninsulated press-in sockets (rigid)
d.) Safety sockets, *see catalogue Lab Si*

Overvoltage, Overvoltage Category

When voltages increase over their normal level for a short time, these are known as overvoltages or transients. The level of overvoltage that can occur in electrical equipment depends on its position in the mains supply system.

General rule:
The more switches and fuses there are between the source of the overvoltage and the point of connection within the installation the smaller the overvoltages will be.

Since it is impossible to determine the exact overvoltage in each case, **Overvoltage Categories (CAT)** were introduced. The subdivision of Overvoltage Categories is derived from the **insulation coordination** in IEC 664-1, where the expected overvoltages are oriented around standard fuses and overvoltage protectors.

IEC 664-1 defines **4 Overvoltage Categories (CAT):**

CAT I
Equipment in overvoltage category I is equipment intended for connection to the fixed electrical installation of a building. Outside the equipment, either in the fixed installation or between the fixed installation and the equipment, measures have been taken to limit transient overvoltages to the appropriate levels.

CAT II
Equipment in overvoltage category II is equipment intended for connection to the fixed electrical installation of a building.
Examples:
Domestic appliances, portable tools and similar equipment.

CAT III
Equipment in overvoltage category III is equipment that forms part of the fixed installation and other equipment of which a higher degree of availability is expected.
Examples:
Distribution panels, power switches, distribution systems (IEV 826-06-01, including cables, busbars , distribution boxes, switches, power sockets) in the fixed installation and equipment for industrial use as well as other equipment such as stationary motors with a permanent connection to the fixed installation.

CAT IV
Equipment in overvoltage category IV is intended for use in buildings or at the origin of the electrical installation of buildings between the main distribution and the public supply network.
Examples:
Electricity meters, overcurrent protection equipment and ripple control devices.

The table shows the rated impulse voltages for different, nominal mains voltages and Overvoltage Categories. These voltages are used when calculating the appropriate insulation requirements for electrical parts.

Nominal voltages to earth ac or dc	Overvoltage Category			
	CAT I	CAT II	CAT III	CAT IV
	Rated impulse voltages in volts			
50	330	500	800	1500
100	500	800	1500	2500
150	800	1500	2500	4000
300	1500	2500	4000	6000
600	2500	4000	6000	8000
1000	4000	6000	8000	12000

Table: Rated impulse voltages

Plug devices
are designed to be connected and disconnected under load.

Pollution Degree
The insulation capability of test accessories may be reduced due to pollution of their surfaces. Moisture, dust or combustion particles create conductive bridges which reduce the creepage resistance of the surfaces substantially.

IEC 664-1 defines **4 Pollution Degrees:**

Pollution Degree 1
No pollution or only dry, non-conductive pollution occurs. The pollution has no influence.

Pollution Degree 2
Normally only non-conductive pollution occurs. Occasionally, however, a temporary conductivity caused by condensation is to be expected.

Pollution Degree 3
Conductive pollution occurs, or dry non-conductive pollution, which becomes conductive due to condensation, is to be expected.

Pollution Degree 4
The pollution generates persistent conductivity caused by conductive dust, rain or snow.

Rated current AC / DC
(DIN VDE 0627) is a continuous current, not intermittent, which can flow through every contact simultaneously without the temperature exceeding the allowed upper limit.

Rated voltage AC / DC
(DIN VDE 0627) is the determined voltage of a plug connector from which the related operating characteristics are defined.
For articles that may be used at voltages above 30 V_{AC} / 60 V_{DC}, the catalogue states the rated voltage together with the relevant *Overvoltage Category*.
The rated voltage given in this catalogue always refers to a Pollution Degree 2.

Reinforced insulation
Reinforced insulation is a single insulation system applied to live parts, which provides a degree of protection against electric shock equivalent to *double insulation*.

Safety connectors
All live parts of safety connectors are insulated in such a way, that they cannot be contacted accidentally in the plugged or unplugged condition, if the connector is used properly. Safety connectors comply with all safety standards, eg. IEC/EN 61010-2-031.
A wide range of safety test accessories and safety connectors can be found in our *catalogue Lab Si*.

Silver plating
Silver has very good electrical properties. One drawback is that sulphide tends to form in sulphurous, humid atmospheres.

Supplementary label
Details of the maximum *rated voltage* and *current* are marked on all our products. However, if there is insufficient space on the product itself then this information will be shown on a supplementary label.

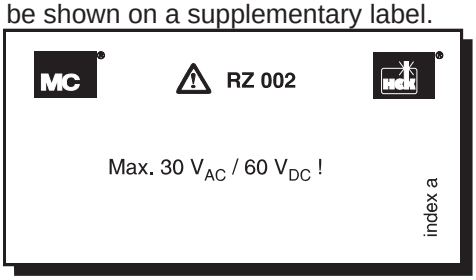

Example

We supply this product with the respective supplementary label as mentioned in the catalogue.

Surface treatment
MC / HCK contact elements are plated, in some cases with precious metals, to protect against corrosion. Typical materials are gold (Au), nickel (Ni) and silver (Ag).

Technical Data
In the case of parts consisting of several components, such as adapter leads, the rating for the whole part is always that of the component with the lowest nominal value.

Technical modifications
We have a policy of continuous improvement and reserve the right to make technical modifications to any product in accordance with any safety and technical developments.

Test voltage
This refers to the voltage a connector is capable of withstanding under pre-established conditions without breaking down or flashing over. In order to avoid possible confusion with rated voltage, the test voltage value is not stated in the catalogue.

Wire structure
Our highly flexible cable consists of very fine individual copper strands. The number, thickness and braiding of these strands determines the wire structure.

Withdrawal force
see *Insertion and withdrawal force*.

Type	Page
A	
A-SLK4-RG	90
A2/4	117
A4/4-Z	117
AGK10	87
AGK20	87
AGK40	50
AK0,63-B/405-BK	27, 28, 113
AK0,8x1,6-B/405-BK	114
AK1-A/4012-BK	114
AK1-B/1-S	5
AK2-F/4-A	112
AK2-F/4-B	112
AK205/410	112
AK205/405-BK	113
AK410-BK/TK	89
AK410-L/B	69
APK-4	87
AS-2/4	117
ASTV4-AH	85
ASTV4-AS	85
AZ4/4-2	116
B	
B-2G	52
B-2N	52
B-4N	101, 102
B-EB2	53
B-EB2-A	53
B-EB2-F	53
B-EB2-WR	53
B-EB4	102
B-EB4-A	102
B-EB4-B	103
B-EB4-C	103
B-EB4-F	103
B-LB2-R	54
B-LB4-R	104
B-LB4-R/A	104
B0,5	16
B0,56-0,64	16
B0,6-0,8	16
B0,7	16
B0,7-0,8	16
B0,7-B	16
B0,8	17
B0,8-H	17
B1	17
B1,25	20
B1,3	20
B1,5	20
B1,57-16	20
B1,57-20R	20
B1-A	18
B1-AI	19
B1-B	18
B1-BI	19
B1-S	18
B1-T	17
B1-TH	17
B2	21
B2-A	21
B4-E-IM4	92
B4-E-IM4-I	92
B4-E-IM5	92
B4-E-IM5-I	92
B4-E-M3	91
B4-E-M3,5	91
B4-E-M3,5-I	91
B4-E-M3-I	91
B4-E-M4	91
B4-E-M4-I	91
B4-E-M5	91
B4-E-M5-I	91
BI-LB2-IF	54
BI-LB4-R/I	104
BI-LB-I2R	54
BI-LB-I4/2P	107
BI-LB-I4Q	106
BI-LB-I4R	105
BI-LB-I4R-A	105
BI-LB-I4R-B	105
BI-LB-IF2R	54
BI-LB-IF4/2P	107
BI-LB-IF4Q	106
BI-LB-IF4R	106
BI-LB-IF4R-A	106
BS1	19
BS1/90	18
C	
CH225-L	58
CH225-M3	58
E	
EB0,76	14
EB1	14
EB2	53
EB2-A	53
EB2-F	53
EB2-WR	53
EB4	102
EB4-A	102
EB4-B	103
EB4-C	103
EB4-F	103
EBI-2	54
EBI-40	105
EKK-415	119
EPB-2G	52
EPB-2N	52
EPB-4N	102
ES-1	86
ESD-ID/S4	123
ESD-ID/S4-S	123
F	
FAL	69
FLEXI-2V 0,75	*69,* 125
FLEXI-2V 1,0	*71, 72,* 125
FLEXI-E 1,5	*61, 66, 68, 70,* 125
FLEXI-E 2,5	62, 64, 65, 68, 70, 72, 125
FLEXI-E/HK 0,17	*4,* 125
FLEXI-E/HK 0,25	*5, 7, 113,* 125
FLEXI-E/HK 0,50	*7, 8, 32, 33, 34, 35, 36, 38, 39, 112, 113,* 125
FLEXI-E/HK 1,0	61, 64, 66, 67, 68, 69, 70, 125
FML	60
FS/M2	40
FS/M2,5	42
FS/M3	42, 43, 77
FS/M4	78
FSH2,8x0,8	52, 53, 54
FSH4,8x0,8	101, 102, 103, 105, 106
FSL	60
G	
GL-438	72
GL-458	71
GMF-402	73
GMF-438	72
GMF-480	73
GMS-402	73
GMS-438	72
GMS-480	73
GS-LS425-SM	21, 26, 58
GVF-458	71
GVS-458	71
H	
H-491N	75
H-ESD-ID/S4-S	123
H2,5-6	80
H6-10	80
HK-42	29
HK 0,127	*6, 114,* 125
HK18-H	*37,* 126
HK2,5-D/TF	*62,* 126
HLB2-G	55
HLK218-L	37
HSS2,7	14
HSS4,9	53
HSS6,8	102, 103
HSS12,2	123
I	
I-A2/4	91, 92
I-CH225	21, 26, 58
I-EB1	14, 17, 18
I-EB2	53
I-EB4	102, 103
I-EB4-B	103
I-KK2/2	92
K	
K-41	74
KB0,63-0,8-5,08	10
KB0,63-2,54/1	10
KB1-2,54	13
KB1-2,54/1	13
KB1-5,08	13
KB1-5,08/1	13
KB2-10	45
KH2	117
KK2/2	115
KK2/4	115
KK4/4	115
KKM-4M	119
KKS-4M	120
KLS4	95
KP4-2P/19	95
KPS1	29
KPS1/B2	50
KPS2	29
KPS4/1	28
KPS5/4	87
KPSO	29
KPZ-4M	122
KPZ-4MD	121
KPZ-BM	122
KPZ-BMD	121
KS0,63-2,54	10
KS0,63-5,08	10
KS0,63-6,35	10
KS1-2,54	12
KS1-5,08	12
KS1-6,35	12
KS1-10,16	12
KS1-11,43	12
KS1-15,24	12
KS1-20,32	12
KS2-5,08	44
KS2-5,08/1	44
KS2-5,08/1A	44
KS2-5,08L	45
KS2-5,08L/1	46
KS2-10	44
KS2-10L	46
KS2-10L/1	47
KS2-19L	47
KS2-19L/1	47
KS4-10	96
KS4-12	96
KS4-14	96
KS4-14L/A	97
KS4-14L/N	97
KS4-14LA/A	97
KS4-14LA/N	97
KS4-19	96
KS4-19L	98
KS4-19L/1	98
KS4-25L	99
KSI0,63-10,16	9
KSI0,63-11,43	9
KSI0,63-2,54	9
KSI0,63-5,08	9
KSI0,63-6,35	9
KSI0,63-7,62	9
KSI0,63-8,89	9
KSI1-2,54	11
KSI1-5,08	11
KSI1-6,35	11
KT-TS1	63
KT-TS2,5	63
KT0,76-S	4, 22
KT1-A	6, 19, 114
KT1-S	5, 7, 18, 23, 113
KT2,3-F	38
KT2,3-F90	38
KT2-F	33, 112
KT2-F90	33
KT2-S	7, 8, 17, 20, 25, 26, 32, 35, 39
KT205	34, 112, 113
KT205-S	21, 26, 32, 35, 36
KT218-H	37
KT4-A	66, 112, 116
KT4-B	66, 112
KT4-B1,5	66
KT4-B90	67
KT405-BK	113
KT410	61, 63, 112
KT410-BK	114
KT410-D90	64
KT410-L	68, 69, 70, 108
KT415	61
KT415-L	68, 70, 108
KT425	65
KT425-A	62, 63
KT425-D90	64
KT425-G	65
KT425-L	68, 70, 108
KT425-ZL	72
L	
L-400	69
L-409	74
L-41	74
L-41Q	74
L-421	75
L-471	75
LB-I2R	54
LB-I4/2P	107
LB-I4Q	106
LB-I4R	105
LB-I4R-A	105
LB-I4R-B	105
LB-IF2R	54
LB-IF4/2P	107
LB-IF4Q	106
LB-IF4R	106
LB-IF4R-A	106
LB0,76	14, 17
LB1	14, 18
LB2	51
LB2-A	51
LB2-D	51
LB2-D/N	51
LB2-IF	54
LB2-R	54
LB4	101
LB4-A	101
LB4-G/M3,5	93
LB4-G/M4	93
LB4-N	101
LB4-R	104
LB4-R/A	104

Type	Page
LB4-R/I	104
LBH225-M3	21, *58*
LK0,76-S	4
LK1,25-B	7
LK1,5-S	8
LK1,62-S	8
LK1-A	6
LK1-B	7
LK1-S	5
LK2-F	33
LK2-F/SIL	33
LK2-F90	33
LK2-F90/SIL	33
LK2-S	32
LK2-S/A	32
LK205	34
LK205/SIL	34
LK205-A	34
LK205-A/SIL	34
LK205-B	36
LK205-B/SIL	36
LK205-BF	36
LK205-BF/SIL	36
LK205-L	35
LK205-S	35
LK205-S/SIL	35
LK205-U	32
LK205-U/SIL	32
LK205-X	34
LK2,3-F	38
LK2,3-F/SIL	38
LK2,3-F90	38
LK2,3-F90/SIL	38
LK305-L	39
LK4-A	66
LK4-A/SIL	66
LK4-B	66
LK4-B/SIL	66
LK4-B1,5	66
LK4-B90	67
LK4-B90/SIL	67
LK410	61
LK410/SIL	61
LK410-B	70
LK410-B/SIL	70
LK410-D90	64
LK410-D90/SIL	64
LK410-L	68
LK410-L/SIL	68
LK410-TS	63
LK410-X	61
LK415	61
LK415-B	70
LK415-L	68
LK425	65
LK425/SIL	65
LK425-A	62
LK425-A/SIL	62
LK425-A/TF	62
LK425-A/TS	63
LK425-A/X	62
LK425-B	70
LK425-D90	64
LK425-D90/SIL	64
LK425-G	65
LK425-G/SIL	65
LK425-L	68
LK425-Z	71
LK425-Z/SIL	71
LK425-ZL	72
LK425-ZL/SIL	72
LKH	128
LKH-A	128
LKH-B	128
LKH-BSCH	128
LKH-D	128
LKH-K	128
LKH-S	128
LKH-SCH	128
LKW2	130
LS0,63-0,78-B-I	113
LS0,76-S	4, 22
LS1	19
LS1-A	6, 19, 114
LS1-B	5, 7, 18
LS1-S	5, 23
LS1,25-B	7, 20
LS1,5-S	8, 25
LS1,62-S	8, 25
LS2-F	33, 112
LS2-F/N	33
LS2-S	26, 32
LS2-S/A	26, 32
LS205	34, 41, 112, 113
LS205-A	34, 41
LS205-B	36
LS205-BF	21, 36
LS205-L	35, 40
LS205-S	35, 41
LS205-U	26, 32
LS218-H	37, 41
LS225	26, 58
LS225-BF	21, 58
LS2,3-F	38
LS305-L	39, 43
LS4	66, 67, 112, 116
LS4N	66, 67
LS4/2P	83
LS410	61, 62, 81, 112
LS410-B	69, 70
LS410-BK-I	113, 114
LS410-L	68, 69, 81
LS410-TS	63, 84
LS425	64, 65, 82
LS425-A/TS	63, 84
LS425-AM	*62,* 84
LS425-B	70
LS425-G	65
LS425-L	*68,* 82
LS425-S	82
LS425-SK	82
LS425-SK/N	82
LS425-SL	81
LS425-SL/N	81
LS425-SM	83
LS425-SW	83
LS425-SW/A	83
LS425-ZL	72
LS425-ZL/M3	72
LS440	84
LSH225-M3	26, *58*
M	
M-CZ	20, 22
MB0,76	14
MB1	14
MB2	51, 52, 53
MB2-S	30
MB4	102, 103
MB4-ESD	123
MCL-1	27
MEB1,5-R	30
MGA-4	86
MH-1/200	129
MH-1/250	129
MH-1/330	129
MH-1/500	129
MH-1/750	129
MH-1/1000	129
MH-3PL	131
MH-3R	131
MICROGRIP-A	28
MINI-STRIPAX	127
MINI-STRIPAX/M	127
MINIGRIP-4/A	88
MINIGRIP-4/B-50	88
MINIGRIP-4/B-100	88
MINIGRIP-4/CI	88
MLB1,5-R	30
MLK1,5-B/SIL	30
MPK-10	*129,* 131
MPK4-T	109
MPS-200	129
MPS-250	129
MPS-330	129
MPS-500	129
MPS-750	129
MPS-1000	129
MSK-150	86
MU/M5	54
MU/M6x0,5	54
MU/M8x0,5	104, *105, 106, 107*
MU0,5D/M2	40
MU0,5D/M2,5	42
MU0,5D/M3	*42, 43,* 77
MU0,5D/M3N	77
MU0,5D/M4	78
MU0,5D/M5	79
MU0,8D/M2	40
MU0,8D/M2,5	42
MU0,8D/M3	*42, 43,* 77
MU0,8D/M3N	77
MU0,8D/M4	55, 78
MU0,8D/M5	79
MUE/M6x0,75	104
MUR/M6x0,5	54
MUR/M8x0,5	104, *105, 106*
MUR/M12x0,75	55
MUR-S/M12x0,75	123
P	
P1/30-BS	57
P1/30-SSK	57
P1/30-SSL	57
PA2-5x0,65/B4	94
PA2-8x0,8/B4	94
PK2-T	55
PK4-H	111
PK4-T	110
PK4-T/2P	109
PK4-T/A	110
PK4-TS	110
PKUI-35	111
PLAST-E 1,0	126
PLAST-E 2,5	126
PP-130	86
PP-140	86
PP-70/2	49
PP1	49
PPK1	48
PS2,3	90
PTS	127
PZ0,76	4
PZK3	81
R	
R4/2	116
R4/2-A	116
R4/2-F	116
RS-4/2A	117
RSH1,9	30, 53, 102, 123
S	
S-KS2-10L	46
S-KS2-19L	47
S-KS2-5,08L	45
S-KS4-19L	98
S-KS4-25L	99
S-VS4-38	100
S0,8	22
S0,8-H	22
S1	22
S1,3-12	24
S1,3-15	24
S1,3-18,5	24
S1,3-22	24
S1,3-31	24
S1,3-44	24
S1-A	22
S1-B	23
S1-C	23
S1-D	23
S1-E	23
S1-F	23
S2-D	25
S2L	25
S2L-S	25
SA2,5	42
SA2,5-G	42
SA2,8	42
SA200	40
SA203	40
SA300	43
SA301	43
SA400	78
SA400-B	78
SA400-M/1	80
SA401	79
SA402	79
SA402-H	79
SA403	78
SA404	77
SA405	77
SA479	79
SA481	80
SA482	80
SA483	77
SA484	77
SA485	80
SA486	78
SAL	69
SCHUDE-LB	108
SILI-1V 0,75	*69,* 126
SILI-1V 1,0	*71, 72,* 126
SILI-E 0,50	*32, 33, 34, 35, 36, 38,* 126
SILI-E 1,0	*61, 64, 66, 67, 68, 70,* 126
SILI-E 2,5	*62, 64, 65, 72,* 126
SMC-10	27
SML	60
SP2	54
SP4	104, *105, 106, 107*
SPPK4	90
SS2	54, 123
SS2-S	30
SS4	30, 104, 105, 106
SS425	55, 123
SSL	60
SSP4	55
STRIPAX	127
STRIPAX/M	127
STS1,5	95
T	
T-POAG6	84
U	
U/M2	40
U/M2,5	42
U/M3	*42, 43,* 77
U/M3N	77
U/M4	55, 78
U/M5	79
V	
VS4-38	100
VZP2-A	132
VZP2-B	132
VZP2-D	132
VZP2-E	132

ø1 mm up to ø4 mm Connectors
not touch-protected.
Miniature connectors, plug connectors for printed circuits, connecting leads, plugs, sockets, test probes, clips and other test accessories for use up to 30 V_{AC} / 60 V_{DC}.



ø2 mm, ø4 mm, ø6 mm Safety Connectors
touch-protected according to IEC / EN 61010-2-031.
Safety test and connecting leads, safety panel-mount sockets, safety test probes, safety clips, SMD test tweezers, safety special adapters for practically every conceivable type of contact.



High Frequency Safety Test Accessories
touch-protected up to 1000 V, CAT II according to IEC / EN 61010-2-031.
Fully insulated high frequency test probes with plug-on accessories for different types of connections, fully insulated BNC connectors, BNC leads, BNC adapters, BNC panel-mount sockets.

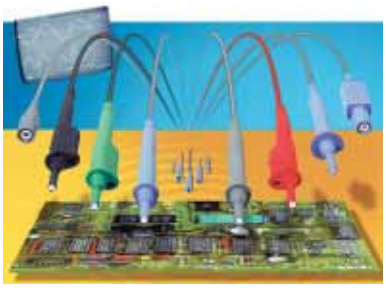

Multistrand Wires
highly flexible, very thin wires, extremely resistant sheathing (e. g. of Silicone, PVC, TPE, Teflon®-FEP), wire cross sections from 0,1 mm^2 up to 300 mm^2, rated current up to max. 600 A, Special wires for impulse voltages and high voltage applications as well as coaxial cable.

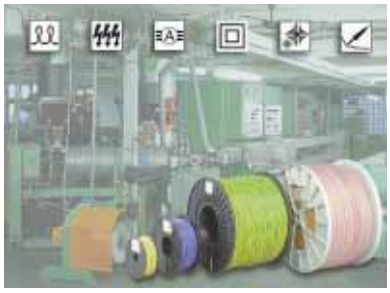

High Current Product Group
Round connectors, insulated and uninsulated up to 6000 A, fork connectors and flat connectors for busbars, crossbar distributors, multi-pole round connectors (up to 109 pole + PE), motor terminal plugs, connectors for slide-in rack systems, photovoltaic connectors, special connectors with the MC Multilam® technology.

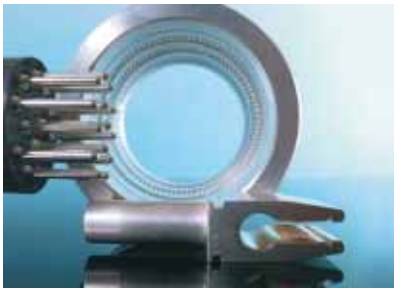

Test Equipment Product Group
for safety tests complying with IEC / EN / VDE / DIN
- insulating oil tests
- dielectric strength tests
- insulation and protective conductor tests
- routine tests of electrical equipment, machines and installation during production.



MC®-Niederlassungen / MC®-Companies / Filiales MC®

World Headquarters:
Multi-Contact AG Basel
Stockbrunnenrain 8+12
CH – 4123 Allschwil 1
Tel. +41/61/306 55 55
Fax +41/61/306 55 56
e-mail: mailbox@multi-contact.com
http://www.multi-contact.com

Multi-Contact Deutschland GmbH
Hegenheimerstrasse 19
Postfach 1606
D – 79551 Weil am Rhein
Tel. +49/76 21/6 67 - 0
Fax +49/76 21/6 67 - 100
e-mail: mailbox@multi-contact.de

Multi-Contact Essen GmbH
Hövelstrasse 214
Postfach 120 164
D – 45311 Essen
Tel. +49/2 01/8 31 05 - 0
Fax +49/2 01/8 31 05 - 99
e-mail: mce@multi-contact.com

Multi-Contact France S.A.
Siège social
4, rue de l'Industrie
B.P. 37
F – 68221 Hésingue Cedex
Tel. +33/3/89 67 65 70
Fax +33/3/89 69 27 96
e-mail: info@multi-contact-france.fr

Austria: Multi-Contact
Handelsges.m.b.H. Austria
Hauptplatz 8
A – 3452 Heiligeneich
Tel. +43/2275/56 56
Fax +43/2275/56 56 4
e-mail: multi-contact@netway.at

Multi-Contact Benelux N.V./S.A.
Kortrijksesteenweg 90/D
B – 9830 Sint-Martens-Latem
Tel. +32/9/281 07 50
Fax +32/9/281 07 55
e-mail: info@mc-benelux.be

Multi-Contact Italia S.r.l.
Via Vetreria, 1 "Como 90"
I – 22070 Grandate (CO)
Tel. +39/031/56 52 52
Fax +39/031/56 52 62
e-mail: multi-contact-it@betacom.it

Multi-Contact (UK) Ltd.
3 Presley Way
Crownhill
Milton Keynes
GB – Buckinghamshire MK8 OES
Tel. +44/1908 26 55 44
Fax +44/1908 26 20 80
e-mail: sales@multi-contact.co.uk

Multi-Contact USA
U.S. Headquarters
5560 Skylane Boulevard
Santa Rosa, CA 95403-8244
Tel. +1/707/575 - 7575
Fax +1/707/575 - 7373
e-mail: mailbox@multi-contact-usa.com
http://www.multi-contact-usa.com

Multi-Contact SEA
(South East Asia) Pte. Ltd.
9 Pioneer Road North #01-55
Singapore 628461
Tel. +65/266 09 00
Fax +65/266 10 66
e-mail: mailbox@multi-contact.com.sg

Multi-Contact (Thailand) Co., Ltd.
160/71 Silom Road
ITF Silom Palace, 10th-Floor
Bangrak
Bangkok 10500
Tel. +66/2/266 78 79; 268 08 04
Fax +66/2/267 76 80
e-mail: mconthai@asiaaccess.net.th

Vertretungen / Representatives / Représentations commerciales

Argentina
IDUR S.A.
La Rábida 1251
AR – 1642 San Isidro, Prov. de Bs. As.
Tel. +54/11/4723 8773
Fax +54/11/4723 8380
e-mail: idursa@ciudad.com.ar

Australia
Edward Keller Australia Pty. Ltd.
14-17 Dansu Court
Hallam Vic 3803
Tel. +61/3/9554 6666
Fax +61/3/9554 6677
e-mail: electrical@diethelmkeller.com.au
http://www.diethelmkeller.com.au

Brazil
CRIEM Ltda.
Rua Crepusculo, 28
California
BR – Belo Horizonte -MG-CEP-30 855-000
Tel. +55/313/388 6300; 388 6373
Fax +55/313/388 6513
e-mail: criem@task.com.br

Canada
DCS Electronics Ltd.
85 Chambers Dr., Unit 7
AJAX, ONTARIO
L1Z 1E2 / Canada
Tel. +1/905-683-4500
Fax +1/905-683-8074
e-mail: info@dcs.ca
http://www.dcs.ca

Czech Republic and Slovakia
A.W.V. Elektro spol. s.r.o.
merici a laboratorni technika
Zizkova 247
CZ – 39701 Pisek
Tel. +420/362-212595; 213756
Fax +420/362-213756
e-mail: awv@awv.cz
http://www.awv.cz

Denmark
Hin Horsens A/S
Langmarksvej 29
DK – 8700 Horsens
Tel. +45/7625 9090
Fax +45/7625 9091
e-mail: hin@hin.dk

Finland
Multirel Oy
Kivenlahdenk. 1 B 43
FIN – 02320 Espoo
Tel. +358/9/8190 630
Fax +358/9/8190 6321

Greece
Nikolaos AD. Stylas Agencies
10, Grammou Street
GR – 50100 Kozani
Tel. +30/461/22178
Fax +30/461/30008

Hungary
Mistral-Contact Bt.
Zrinyi Str. 82
H – 1196 Budapest
Tel. +36/1/347 04 10
Fax +36/1/347 04 11
e-mail: csombordi@vnet.hu
http://www.mc.vnet.hu

Iran
RASANA-Mehr Co.
No. 30, 27th St., Alvand Ave.
Argentina Square
Tehran 15166 / Iran
Tel. +98/21/888 19 69; 877 60 90
Fax +98/21/879 66 59; 223 53 73
e-mail: rasana@neda.net

Israel
Giveon Electronics Ltd.
22 Derech Hashalom
Tel Aviv 67892
Tel. +972/3/561 21 71
Fax +972/3/561 21 73
e-mail: agiveon@attglobal.net

Japan
Solton Co. Ltd.
2-13-7 Shin-Yokohama
Kohoku-ku
Yokohama 222
Tel. +81/45/471 77 11
Fax +81/45/471 77 17
e-mail: k-kurima@solton.co.jp

Norway
Teknodidakt A/S
Post-box 36
Kalbakken
N – 0901 Oslo
Tel. +47/22/91 79 75
Fax +47/22/91 79 90
e-mail: tede@teknodidakt.no

Peru
CENTEL S.A.C.
Avenìda Brasil 351 Cercado de Lima
Lima 1 / Peru
Tel. +51/1/423 62 53; 331 01 85
Fax +51/1/433 51 18
e-mail: centel@amauta.rcp.net.pe

Poland
Semicon
ul. Zwolenska 43
PL – 04-761 Warszawa
Tel. +48/22/615 64 31
Fax +48/22/615 73 75
e-mail: info@semicon.com.pl
http://www.semicon.com.pl

Portugal
NOVA ZETA 3
Alam. St.° Antonio dos Capuchos, 4B
P – 1169-092 Lisboa
Tel. +351/21/355 39 30
Fax +351/21/355 39 39
e-mail: info@novazeta3.pt
http://www.novazeta3.pt

Romania
Arc Brasov Srl
Str. Gradinarilor nr. 22
RO – 2200 Brasov
Tel. +40/68/47 25 77 up to 81
Fax +40/68/41 97 49
e-mail: arc@deltanet.ro

Russia
AG ECOINVENT
Didactic Equipment
Ljalin per. 3a
RU – 103062 Moscow
Tel. +7/95/916 7113
Fax +7/95/916 7111
e-mail: sergeyt@education.ecoinvent.ru

Slovenia/Croatia
Belmet d.o.o.
Test and Measurements
Equipment
Ljubljanske brigade 23a
SI – 1000 Ljubljana
Tel. +386/1/518 88 10
Fax +386/1/518 88 20
e-mail: peter.pristov@belmet.si

South Africa
Christensen Tools (Pty) Ltd.
11, Jules Street
2094 Jeppestown RSA
Tel. +27/11/618-3200
Fax +27/11/614-2821
e-mail: info@christensen.co.za

South Korea
Solton Liaison Office
Samboe Trading Corporation
Kangnam (Young Dong)
P.O. Box #2008
Kangnam-Ku
Seoul, Korea
Tel. +82/2/562 9970
Fax +82/2/554 2868
e-mail: maxpow@samboe.com

Spain
Circutor S.A.
Lepanto 49
E – 08223 Terrassa
Tel. +34/93/745 29 00
Fax +34/93/745 29 05
e-mail: central@circutor.es
http://www.circutor.com

Sweden
Elproman AB
Loevbacksvaegen 3
S – 14171 Huddinge
Tel. +46/8/97 00 70
Fax +46/8/646 31 48
e-mail: mail@elproman.se
http://www.elproman.se

Yugoslavia
Blazic Elektronik
Ustanicka 128 B/I
YU – 11000 Beograd
Tel. +381/11/347 22 21; 347 33 36
Fax +381/11/347 15 98
e-mail: blazice@beotel.yu
http://www.blazicelektronik.co.yu

Copyright by MCE / ***MCE - DTP***