PU8704

Pressure transmitter

PU-010-SEG14-V-DVG/DE

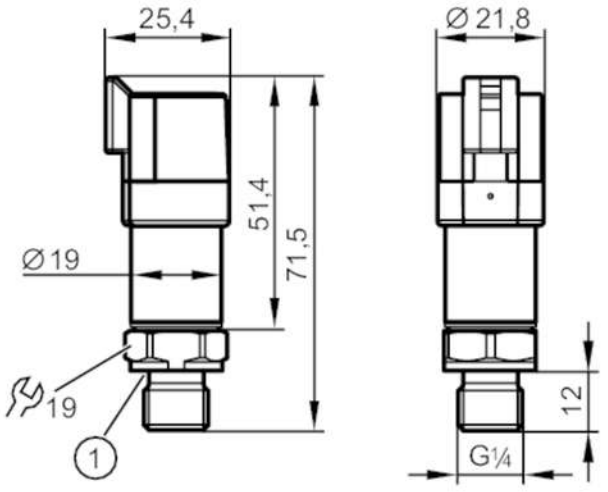

1 Sealing

Product characteristics				
Number of inputs and outputs	Number of analogue outputs: 1			
Measuring range	0...10 bar	0...145 psi	0...1000 kPa	0...1 MPa
Process connection	threaded connection G 1/4 external thread (DIN EN ISO 1179-2)			
Application				
Measuring element	metallic thin film cell			
Application	for mobile applications			
Media	liquids and gases			
Medium temperature [°C]	-40...125			
Min. bursting pressure	300 bar	4350 psi	30 MPa	
Pressure rating	25 bar	360 psi	2.5 MPa	
Note on pressure rating	static			
Vacuum resistance	-1000 mbar	-0.1 MPa		
Type of pressure	relative pressure			
Electrical data				
Operating voltage [V]	8...32 DC			
Current consumption [mA]	< 12			
Min. insulation resistance [MΩ]	100; (500 V DC)			
Protection class	III			
Reverse polarity protection	yes			
Power-on delay time [s]	< 0.1			
Inputs / outputs				
Number of inputs and outputs	Number of analogue outputs: 1			
Outputs				
Total number of outputs	1			
Output signal	analogue signal			
Number of analogue outputs	1			
Analogue voltage output [V]	0.5...4.5			

PU8704

Pressure transmitter

PU-010-SEG14-V-DVG/DE

Min. load resistance	[Ω]	2000			
Short-circuit proof		yes			
Overload protection		yes			
Measuring/setting range					
Measuring range		0...10 bar	0...145 psi	0...1000 kPa	0...1 MPa
Accuracy / deviations					
Repeatability	[% of the span]	< ± 0,05; (with temperature fluctuations < 10 K)			
Characteristics deviation	[% of the span]	< ± 0,8; (incl. drift when overtightened, zero point and span error, non-linearity, hysteresis)			
Linearity deviation	[% of the span]	< ± 0,25 (BFSL) / < ± 0,5 (LS)			
Hysteresis deviation	[% of the span]	< ± 0,2			
Long-term stability	[% of the span]	< ± 0,1; (per 6 months)			
Temperature coefficient zero point	[% of the span / 10 K]	< ± 0,1 (0...80 °C); < ± 0,2 (-40...0 °C / 80...125 °C)			
Temperature coefficient span	[% of the span / 10 K]	< ± 0,1 (0...80 °C); < ± 0,2 (-40...0 °C / 80...125 °C)			
Response times					
Step response time analogue output	[ms]	2			
Operating conditions					
Ambient temperature	[°C]	-40...100			
Storage temperature	[°C]	-40...100			
Protection		IP 67; IP 69K			
Tests / approvals					
EMC		compliant with UN ECE R10, rev. 5			
		ISO 11452-2	100 V/m		
		DIN EN 61326-1			
Shock resistance		DIN EN 60068-2-27	500 g (1 ms)		
Vibration resistance		DIN EN 60068-2-6	20 g (10...2000 Hz)		
MTTF	[years]	658			
Pressure Equipment Directive		Sound engineering practice; can be used for group 2 fluids; group 1 fluids on request			
Mechanical data					
Weight	[g]	61.5			
Housing		cylindrical			
Dimensions	[mm]	Ø 19 / L = 71.5			
Materials		stainless steel (630/1.4542/17-4 PH); stainless steel (316L/1.4404); PPS			
Materials (wetted parts)		stainless steel (630/1.4542/17-4 PH); stainless steel (303/1.4305)			
Min. pressure cycles		60 million; (at 1.2 times nominal pressure)			
Tightening torque	[Nm]	25...35; (recommended tightening torque; depends on lubrication, seal and pressure rating)			
Process connection		threaded connection G 1/4 external thread (DIN EN ISO 1179-2)			
Process connection sealing		HNBR (DIN EN ISO 1179-2)			

PU8704

Pressure transmitter

PU-010-SEG14-V-DVG/DE

Restrictor element integrated	yes

Remarks

Remarks	BFSL = Best Fit Straight Line
	LS = limit value setting
Pack quantity	1 pcs.

Electrical connection

Connector: 1 x DEUTSCH connector (DT04-3P); Maximum cable length: 30 m

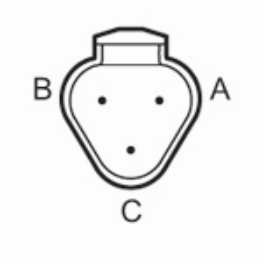

Connection

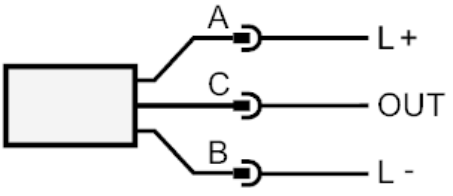

OUT	analogue output