Brand of NTN corporation

Technical data

ESFL.208

Bearing units



Grey cast housing, radial insert ball bearing with eccentric locking collar, single lip seal

KIT CONTENT

ES.208.G2, FL208

VISUAL (S)

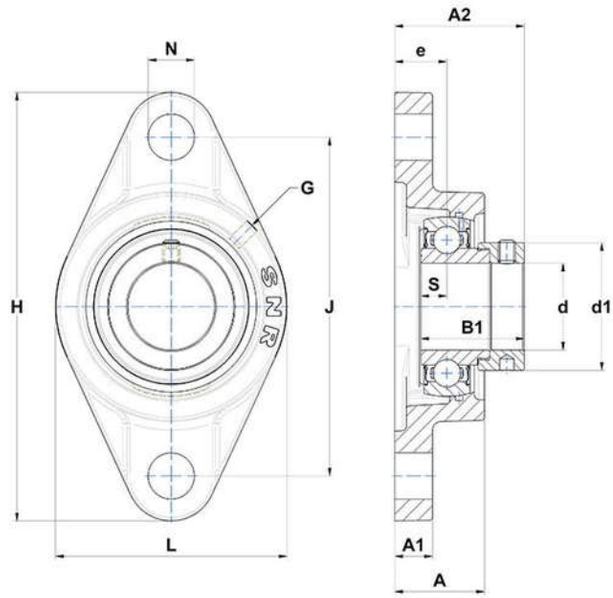

PRODUCT DEFINITION

Brand	SNR
A - Housing height	36 mm
A1 - Housing foot height / flange height	14 mm
A2 - Total height from mounting surface	53,7 mm
B - Width of Inner Ring	30,2 mm
B1 - Overall width Inner Ring	43,7 mm

NTN Europe
1 rue des Usines · BP 2017 · 74010 Annecy Cedex · France · Tel. +33 (0)4 50 65 30 00
S.A. au capital de 322 639 919 € · RCS ANNECY B 325 821 072 · Id. Fiscale : FR 48 325 821 072
SIRET 325 821 072 00015 · Code APE 2815 Z · Code NACE 28.15

PRODUCT DEFINITION	
d - Shaft diameter	40 mm
d1 - Outer dia of eccent. Lock. collar / nut of adapter sleeve	58 mm
e - Distance mounting surface to bearing center	21 mm
G - Grease fitting	M6x1
H - Housing length, width or diameter	175 mm
J - Mounting holes distance	144 mm
L - Housing width / diameter	100 mm
N - Mounting hole dimension	16 mm
S - Distance front side/bearing centre	11 mm

PRODUCT PERFORMANCE	
C - Dynamic load rating	29600000 mN
C0 - Static load rating	18200000 mN
Operating temperature min.	253,15 °K
Operating temperature max.	373,15 °K

OTHER FEATURES	
Mass	1,49 kg
Recommended tightening torque for set screw	11.5 N-m