

Adjustable roller lever, D=18mm, metal

Part no. LSM-XRLA
Article no. 266160

Catalog No. LSM-XRLA

Delivery programme

Basic function			Operating heads
Part group reference			LS(M)-…
Product range			Adjustable roller lever
Diameter	⌀	mm	18
For use with			Basic devices LS(M)…

Notes The operating head can be rotated at 90° intervals to adapt to the specified approach direction.

Approvals

Product Standards	IEC/EN 60947-5; UL 508; CSA-C22.2 No. 14; CE marking
UL File No.	E29184
UL Category Control No.	NKCR
CSA File No.	12528
CSA Class No.	3211-03
North America Certification	UL listed, CSA certified

Technical data ETIM 5.0

Sensors (EG000026) / Drive head for position switches/hinge switches (EC001483)

Electric engineering, automation, process control engineering / Binary sensor technology, safety-related sensor technology / Position switch / Drive head for position switches (ecl@ss8-27-27-06-04 [BAA083008])

Type of control element			Adjustable roller lever

Dimensions

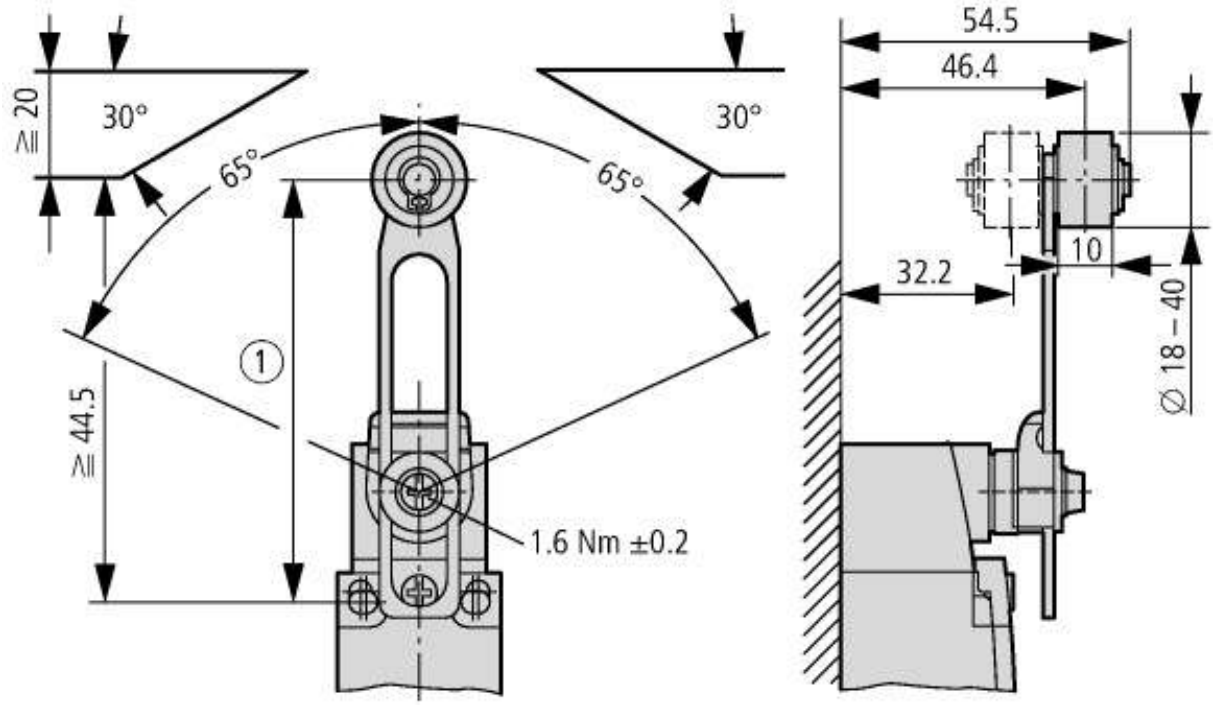

1 Setting range of 54.5 to 97

© 07/2014 by Eaton Industries GmbH