VARIMETER
Frequency Relay
MK 9837N, MH 9837

0260272



Setting

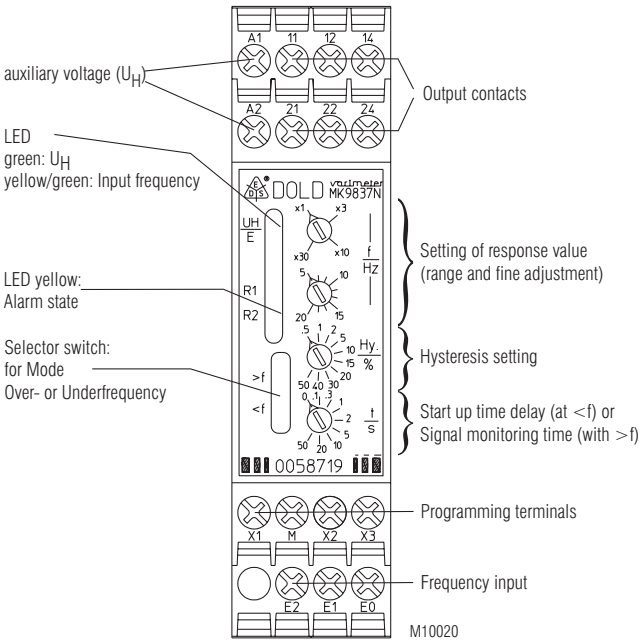

Your Advantages
- Universal usage
- Easy handling

Features
- According to IEC/EN 60 255-1
- Detection of over- or underfrequency of alternating voltage (adjustable function)
- Fast reaction time by measuring duration of cycle of input frequency
- Universal measuring input for AC-voltages of 15 ... 280 V as well as 30 ... 550 V
- As option with measuring input for inverters
- 4 ranges adjustable response value 1,5 ... 200 Hz or 5 ... 600 Hz
- Adjustable hysteresis
- Adjustable start up time delay 0 ... 50 s at function underfrequency
- Adjustable monitoring time for missing input signal at function overfrequency
- Response delay programmable via terminals 0 ... 100 s
- Alarm storing or auto-reset programmable via terminals
- Galvanic separation between measuring input, auxiliary voltage and output contacts
- MH 9837 available with wide input range for auxiliary supply (AC/DC 24 ... 60 V or AC/DC 110 ... 230 V)
- 2 changeover contacts, closed circuit operation
- Open circuit operation on request
- LED indication for auxiliary voltage, measuring voltage and alarm status
- MH 9837.12/008: with galvanic separated analogue output (current/voltage) and 11 step LED chain for the actual frequency
- Device available with 2 response values and seperately controlled outputrelays for under- and overfrequency see MK 9837N/500
- 2 possible compact designs:
  MK 9837N: Width 22,5 mm
  MH 9837: Width 45 mm

Approvals and Markings

A025518

*) only MK 9837N

Applications

- Monitoring of frequency in AC systems
- Monitoring of rotor frequency on slip ring motors
- Control and monitoring of motors in sewage water treatment plants
- Monitoring of output voltage on inverters (variant /050)
- Monitoring of supply voltage frequency on railway rolling stock

All technical data in this list relate to the state at the moment of edition. We reserve the right for technical improvements and changes at any time.

Function Diagram

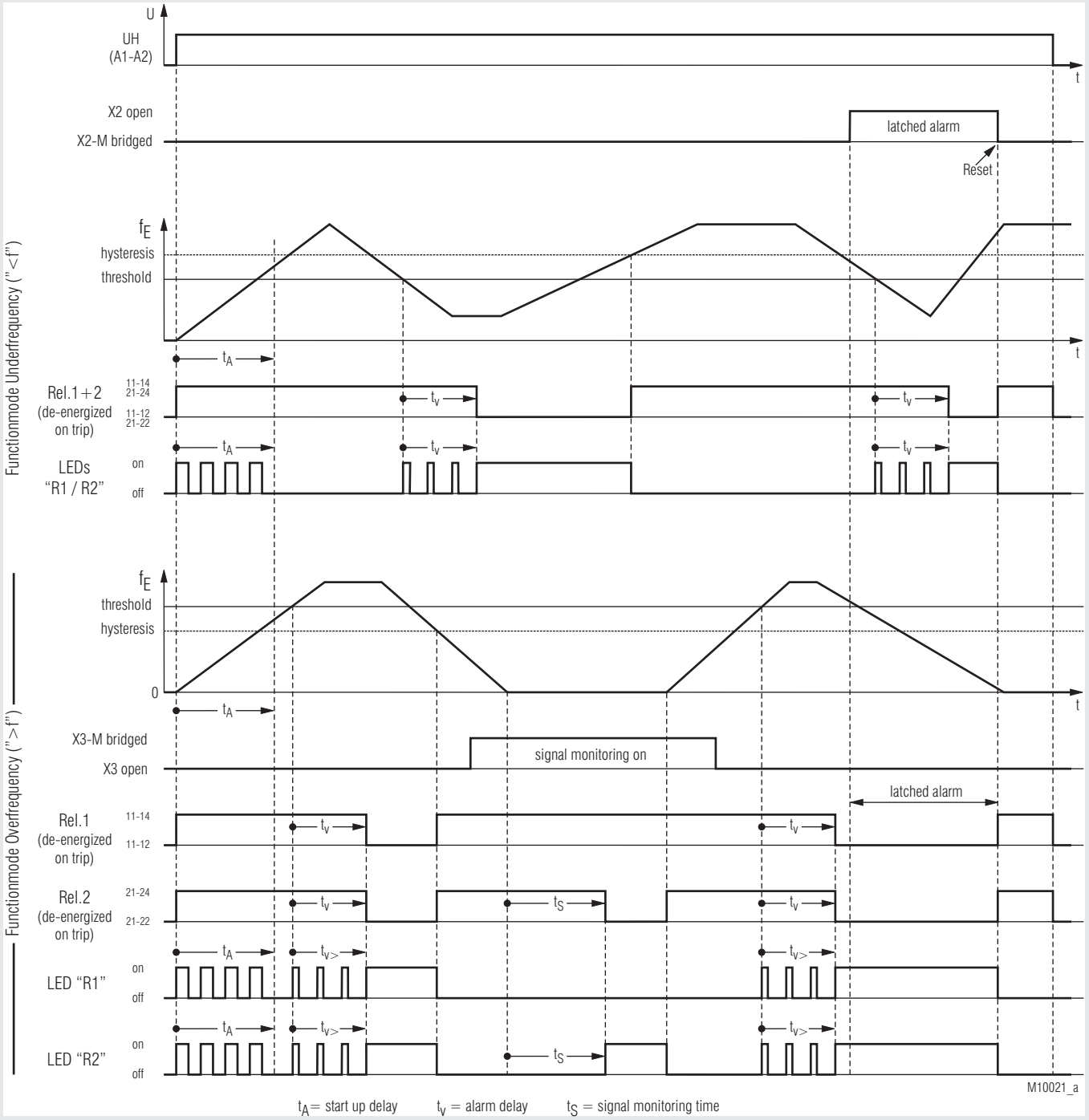

Circuit Diagrams

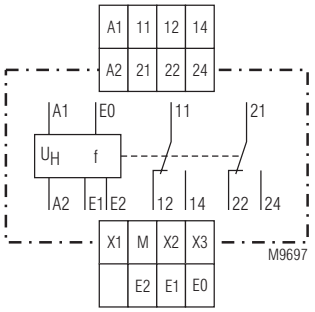

MK 9837N

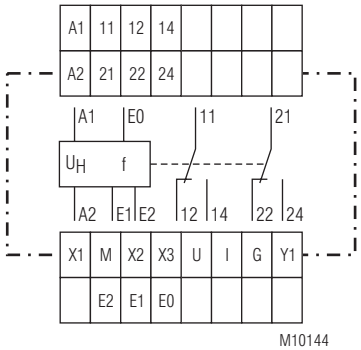

MH 9837/008

Connection Terminals

Terminal designation	Signal designation
A1+, A1	+ / L
A2	- / N
E0, E1, E2	Frequency input
X1, X2, X3	Programming terminals
M	Reference for programming terminals
U	Analogue output voltage
I	Analogue output current
G	Reference for analogue output
Y1	Range selection for analogue output
11, 12, 14, 21, 22, 24	"monitoring output frequency failure (2 changeover contacts)"

Functions

The auxiliary supply is connected to terminals A1-A2.
Terminals E0-E1-E2 form the measuring input. For low voltages the measuring voltage is connected to E1-E0 and for higher voltages to E2-E0 (see section technical data).
The input frequency is compared to the setting value (response value = fine tunig x range).
As the device measures the cycle duration the fastest frequency measurement is possible (reaction time = cycle time + 10 ms).
In overfrequency mode (switch on front in pos. “>f”) the output relay switches to alarm state if the input frequency rises above the response value for a longer time then selected on the terminals. If the measuring frequency drops again under the hysteresis value, the output relay switches back to good state without delay.
In underfrequency mode (switch on front in pos. “<f”) the output relay switches to alarm state, if the input frequency drops below the response value for a longer time then selected on the terminals. If the measuring frequency rises again above the hysteresis value, the output relay switches back to good state without delay.

If manual reset is chosen, the output relay stays in tripped position, even if the frequency is back to normal. The reset is made by bridging terminals X2-M or by disconnecting the auxiliary supply.

In alarm state the yellow LEDs „R1“ / „R2“ are continuously on, during time delay they flash with short pulse.

In de-energized on trip mode the output relay is energized in good state (contacts 11-14 etc. closed).
In energized on trip mode the output relay is energized in alarm state (contacts 11-14 etc. closed).

If start up delay is selected a timer is started after connection of auxiliary supply that disables the measuring circuit for the adjusted time. This start up delay avoids an alarm e.g. when starting a generator or motor.

When measuring overfrequency, monitoring of the signal on E0-E1-E2 can be selected. If the signal is missing longer then the selected monitoring time, relay 2 (contacts 21-22-24) and LED “R2” indicate alarm.

Indicators

Upper LED „UH/E“: - green, when only auxiliary voltage connected to A1 - A2
- yellow/green, when measuring frequency is detected on E0-E1-E2

Lower LED „R1“ (yellow): - On, when alarm state (under- / overfrequency) flashes (with short pulse) when time delay is active

Lower LED „R2“ (yellow): - On, when alarm state (under- / overfrequency) flashes (with short pulse) when time delay is active
- additional flashes at signal monitoring alarm LEDs "R1" and "R2" flash together during start up delay

Notes

Frequency measuring input

The standard measuring input is divided up in to voltage ranges (E1-E0 AC 15… 280 V and E2-E0 AC 30 … 550 V). If the measuring voltage is always higher then AC 30 V, the higher range should be used. To measure the output frequency on inverters the variant /_5_ has to be used. A special dimensioned measuring input with low pass characteristic avoids the measuring of the pulse frequency. In addition the input sensitivity is adapted to the voltage-/frequency-characteristic of inverters (see diagram in technical data).
Visual indication of measuring voltage: If the voltage on the measuring input is to low for correct function on inputs E0-E1-E2 the upper 2-colour LED “UH/E” shows green continuous light. If underfrequency is selected the unit indicates underfrequency alarm, if overfrequency is selected together with measuring signal monitoring the unit indicates measuring signal alarm. If the voltage on the measuring input is high enough the LED “UH/E” flashes yellow/green.

Notes

Start up delay / monitoring of measuring signal.
The start up time delay (tA) can be adjusted with the lowest potentiometer on the front side of the unit and is activated when connecting the auxiliary supply.
In underfrequency mode (“<f”) the start up delay can be extended/restarted at any time with a control contact between terminals X3-M. As long as X3-M is bridged the start up delay is continuously on and the frequency is not measured. When the link on X3-M is opened the start up delay time restarts.
In overfrequency mode (“>f”) with a bridge on X3-M, the lowest potentiometer sets the measuring signal monitoring time (tS) (The adjusted time values tA/tS are identically).
When signal monitoring in mode “>f” is selected by bridging X3-M the measuring input is monitored as follows: If during the adjusted monitoring time interval no measuring signal is detected, measuring signal alarm is indicated. As soon as the measuring signal returns the alarm status is reset (auto reset selected) and the monitoring interval tS starts again.
The alarm status is indicated on relay 2 (contacts 21-22-24) and LED “R2” and can be easily differentiated from under/over frequency alarm where both relays (contacts 11-12-14and 21-22-24) and LEDs “R1”and “R2”) are active.
The detection of missing measuring signal can increase the safety in critical applications on overfrequency. It detects if the measuring signal is connected to the input of the device and works correctly

Programming terminals (M-X1-X2-X3):

Attention! The terminals M-X1-X2-X3 have no galvanic separation to the measuring circuit, and must be operated potential free.

M: Common connection (Ground) of the programming terminals
X1: A response delay of 0…100 s after connection of auxiliary supply is achieved by connecting a X1 to M with a potentiometer or fixed resistor (see technical data). The delay can be stopped by bridging X1 to M at any time.
If no start up delay is required the terminals X1-M must be linked.
X2: Manual reset with NO contact push button on X2-M, auto reset with terminals X2-M bridged.
X3: When X3-M is bridged in mode “underfrequency” the start up delay is continuously active or the time is restarted. In mode overfrequency the monitoring of the measuring signal is switched on by bridging X3-M.

Adjustment aid for start up delay and alarm delay

During the elapse of start up delay and alarm delay the yellow LED „R1“ and „R2“ is flashing with a frequency of 2 Hz. To set a specific time value in seconds the number of flash pulses can be used to check the setting: Number of flash pulses divided by 2 = time delay in seconds.

Variant MH 9837.12/008: 45 mm width
Identically to MK 9837N.12, but with 11 step LED chain indicator and galvanic separated analogue output to display the actual measured frequency.
On terminals U/G of the analogue output 0-10 V are provided, on terminals I/G 0-20 mA are available. By bridging terminals Y1 and G the output can be switched over to 2-10 V and 4-20 mA. The max. value of the analogue output is indicating 2 times of the max. value of the selected range this allows also to indicate overfrequency values. The scaling is linear to the input frequency (lowest analogue value is 0 Hz). The LED chain indicator shows on 10 LEDs the actual frequency (≤ 10% ... 100% of the setting range). If the frequency exceeds the maximum value of the range the idicator is switched over to 2 x max value and the top LED (red) is on.

Frequency Measuring Input (E0-E1-E2)

Standard-frequency measuring
Voltage range
E0-E1: AC 15 ... 280 V,
E0-E2: AC 30 ... 550 V
Input resistance
E0-E1: approx. 300 kΩ
E0-E2: approx. 850 kΩ

Frequency Measuring Input for Inverters (variant /_5_)

Max. input voltage: AC 550 V
Min. measuring voltage: see characteristic M9349
Input resistance: approx. 900 kΩ

Common Data for Both Measuring Inputs

Galvanic separation: Frequency measuring input to auxiliary voltage and output contacts

Frequency ranges:

1,5 ... 6 Hz	5 ... 20 Hz	15 ... 60 Hz	50 ... 200 Hz or
5 ... 20 Hz	15 ... 60 Hz	50 ... 200 Hz	150 ... 600 Hz 4 ranges selectable

Response time
(response value): continously variable;
1:4 in each response value

Tolerances of the adjusted tripping values at variation of auxiliary supply and temperature: better than ± 1 %
Hysterese: continously variable: 0,5 ... 50 % of adjustable response value

Reaction time of Frequency monitoring: (Alarm delay set to 0)
Duration of 1 cycle (inverse value of adjusted frequency) + 10 ms

Response delay: adjustable 0 ... 100 s with resitor/potentiometer across terminals X1-M:

R / kΩ:	0	15	22	33	47	68	100	150	220	470	∞
t_v / s:	0	0.3	0.7	1.3	2.3	5	9	15	25	50	100

Time between connection of auxiliary supply and ready to mesure: approx. 0,4 s (with start up delay is 0)
Start up time delay / Signal monitoring time: 20 ms ... 50 s continously variable on logarithmic scale

Auxiliary Circuit (A1-A2)

Auxiliary voltage U_H
(galvanic separation): AC 115, 230, 400 V
DC 12, 24, 48 V
AC/DC 24 ... 60, 110 ... 230 V (only for MH-version possible)
Voltage range
AC: 0,8 ... 1,1 U_H
DC: 0,9 ... 1,2 U_H
AC/DC: 0,75 ... 1,2 U_H
Frequency range
AC: 45 ... 440 Hz
Nominal consumption:
AC: approx. 4 VA
DC: approx. 2 W

Output (11-12-14, 21-22-24)

Contacts: 2 changeover contacts
Thermal current I_{th}: 4 A
Switching capacity
according to AC 15
NO contact: 3 A / AC 230 V IEC/EN 60 947-5-1
NC contact: 1 A / AC 230 V IEC/EN 60 947-5-1
according to DC 13
NO contact: 1 A / DC 24 V IEC/EN 60 947-5-1
NC contact: 1 A / DC 24 V IEC/EN 60 947-5-1
Electrical life
acc. to AC 15 at 1 A, AC 230 V: 1,5 x 10^5 switching cycles IEC/EN 60 947-5-1
Short circuit strength
max. fuse rating: 4 A gL IEC/EN 60 947-5-1
Mechanical life: ≥ 30 x 10^6 switching cycles

Technical Data

Analogue Output with MH 9837.12/008

galvanic separation AC 3750V
to auxiliary supply, measuring circuit and relay outputs
terminal U(+) / G(-): 0 ... 10 V, max. 10 mA
terminal I (+) / G(-): 0 ... 20 mA, max. burden 500 Ohm
change to 2 ... 10 V or 4 ... 20 mA by bridging terminal Y1 and G.
scaling is linear with frequency (lowest value at f = 0, highest value at 2 x max setting value)

General Data

Nominal operating mode: continuous operation
Temperature range
Operation: - 20 ... + 60°C
(higher temperature with limitations on request)
Storage: - 25 ... + 60°C
Altitude: < 2,000 m
Clearance and creepage distance
rated impulse voltage / pollution degree:
output to measuring circuit: 4 kV / 2 IEC 60 664-1
output to auxiliary circuit: 4 kV / 2 IEC 60 664-1
output to output: 4 kV / 2 IEC 60 664-1
auxiliary circuit to measuring input: 4 kV / 2 IEC 60 664-1
Programming terminals M-X1-X2-X3: without galv. separation to measuring circuit

EMV
Electrostatic discharge (ESD): 8 kV (air) IEC/EN 61 000-4-2
HF-irradiation
80 MHz ... 1 GHz: 20 V/m IEC/EN 61 000-4-3
1 GHz ... 2.5 GHz: 10 V/m IEC/EN 61 000-4-3
2.4 GHz ... 2.7 GHz: 1 V/m IEC/EN 61 000-4-3
Fast transients: 2 kV IEC/EN 61 000-4-4
Surge voltage between
wires for power supply: 1 kV IEC/EN 61 000-4-5
between wire and ground: 2 kV IEC/EN 61 000-4-5
HF-wire guided: 10 V IEC/EN 61 000-4-6
Interference suppression: Limit value class B EN 55 011
Degree of protection:
Housing: IP 40 IEC/EN 60 529
Terminals: IP 20 IEC/EN 60 529
Housing: thermoplastic with V0 behaviour according to UL subject 94
Vibration resistance: Amplitude 0,35 mm
Frequency 10 ... 55 Hz IEC/EN 60 068-2-6
Climate resistance: 20 / 060 / 04 IEC/EN 60 068-1
Terminal designation: EN 50 005
Wire connection: 1 x 4 mm² solid or
2 x 1,5 mm² solid or
1 x 2,5 mm² stranded wire with sleeve DIN 46 228-1/-2/-3/-4 or
2 x 1,5 mm² stranded wire with sleeve DIN 46 228-1/-2/-3/
Wire fixing: Plus-minus terminal screws
M3,5 box terminals with wire protection
Fixing torque: 0.8 Nm
Mounting: DIN rail IEC/EN 60 715
Weight:
MK 9837N: approx. 210 g
MH 9837: approx. 350 g

Dimensions

Width x heigh x depth:
MK 9837N: 22,5 x 90 x 97 mm
MH 9837: 45 x 90 x 97 mm

Classification to DIN EN 50155

Vibration and shock resistance: Category 1, Class B IEC/EN 61 373
Ambient temperature: T1 compliant
T2, T3 and TX with operational limitations
Protective coating of the PCB: No

CCC-Data

Auxiliary voltage U_N:
MK 9837N: AC 115, 230 V
DC 12, 24, 48 V

Switching capacity
to AC 15
NO contact: 1,5 A / AC 230 V IEC/EN 60 947-5-1

Technical data that is not stated in the CCC-Data, can be found in the technical data section.

Standard Types

MK 9837N.12 5 ... 600 Hz U_H AC 230 V
Article number: 0058719

- Switchable monitoring modus: over- or underfrequency
- Closed circuit operation
- Mode overfrequency with selectable signal monitoring
- 4 settable frequency ranges are possible:
  5 ... 20 Hz, 15 ... 60 Hz, 50 ... 200 Hz, 150 ... 600 Hz
- Settalbe hysteresis of 0,5 ... 50 %
- Start up time delay / signal monitoring time:
  settable to 0 ... 50 s
- Response delay: settalbe with external resitor to 0 ... 100 s
- Alarm storing or auto-reset selectable
- Frequency measuring input: AC 15 ... 280 V / AC 30 ... 550 V
- Auxiliary voltage U_H: AC 230 V
- Output: 2 changeover contacts
- Width: 22,5 mm

Variants

MK 9837N.12/050: as MK 9837N.12, but with measuring input for intverters
MH 9837.12: as MK 9837N.12, but for variants with wide auxiliary voltage range
Width: 45 mm
MH 9837.12/008: similar to MK 9837N.12, but with galvanic separated analogue output (current/voltage) and 11 step LED chain.
Width: 45 mm

Ordering example for variants

MK 9837N .12 /050 1,5 ... 200 Hz U_H AC 230 V
- Auxiliary voltage
- Response value
- Variant, if required
- Contacts
- Width: 22,5 mm

MH 9837 .12 1,5 ... 200 Hz U_H AC/DC 110 ... 230 V
- Auxiliary voltage
- Response value
- Contacts
- Width: 45 mm

Characteristic

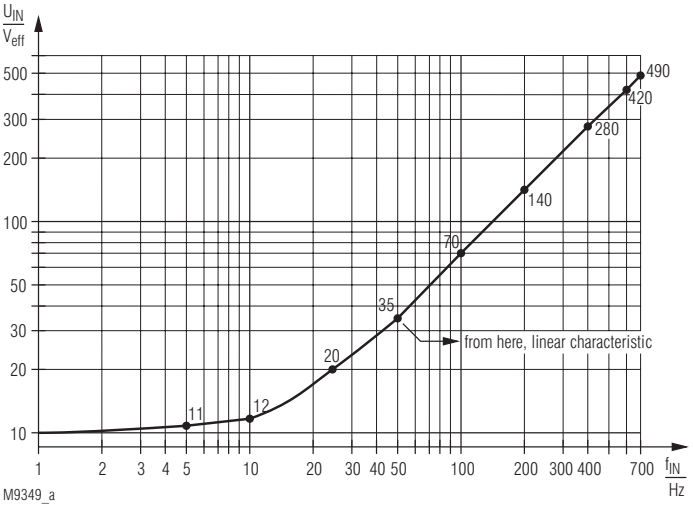

Typical sensitivity of the measuring input at variant MK 9837N.12/_5_