Technical Guidance for Product Selection

Ingress Protection

When choosing a control device, apart from the electrical performance, consideration must be given to the environmental conditions in which the device will be placed. The item may be subjected to dust or dirt or it may come in contact with varying degrees of moisture. Indoor conditions will vary considerably but items may well be placed outdoors where the full influence of rain, ice & snow will be present. Protecting items to varying degrees is detailed in BS EN 60529:1992.

Employing a two digit code the standard defines protection against solid objects and separately protection against water i.e.

IP66
- protection against solid objects
- protection against water

The following extract defines the IP categories used within this document.

1st Digit	Protection against solid objects	
0	Not Protected	
2	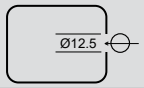	Protected against solid objects greater than Ø12.5
4	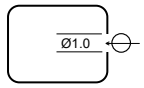	Protected against solid objects greater than Ø1.0
5	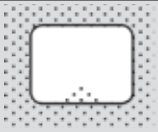	Protected against dust allowing a degree of ingress that isn't harmful to the assembly.
6	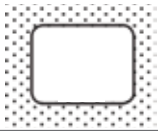	No ingress of dust.

2nd Digit	Protection against water	
0	Not Protected	
1		Protected against dripping water.
4		Protected against splashed water from any direction.
5		Protected against water jets from any direction.
6		Protected against strong water jets from any direction.

Please refer to BS EN 60529:1992 for full details.

Product Guide

Comparing to European standards (BS EN 60947-3) :-

Definition	'Trade' Description	Technical Description
Disconnector Sym. 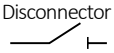 Switch Sym. 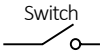 Switch-disconnector Sym. 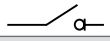	Isolator	A 'Disconnector' is a mechanical switch which in the 'Open' position, complies with requirements specified for the isolating function. A 'Disconnector' or 'Isolator' is an off-load device and marked 'Isolate elsewhere before opening' they have an AC20/DC20 utilisation category. A 'Switch' is a mechanical switching device capable of making, carrying and breaking current under normal circuit conditions, which may include specified operating overload conditions. They also carry, for a specified time, currents under specified abnormal circuit conditions, such as those of short circuit (i.e. Utilisation category AC23A duty). A 'Switch-disconnector' meets both of these criteria and with a Red/Yellow padlockable handle may also be called a 'Safety Isolator'.
Changeover Switch-disconnector Sym. 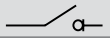	Changeover Switch	A 'Changeover' device is used to connect to one of two sources and in this isolation application will require a central 'Off' position. In all other respects it conforms to the 'Switch-disconnector' requirements.
Fuse Combination Unit Sym. 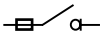	Switch-Disconnector Fuse	A 'Switch-Disconnector Fuse' is a combination of a mechanical switching device with fuses in a composite assembly.

Corrosive Environment

When choosing an enclosure, care must be taken to select the most suitable material taking into account the location, level of pollution, temperature, UV levels, vibration and humidity.

Typical enclosure materials include Aluminium, powder coated Mild Steel or Stainless Steel. Enclosures that are sealed to IP65 are commonly mistaken as being suitable for all outside environments. A powder coated mild steel or Aluminium enclosure will degrade and corrode under certain environmental conditions.

Installing enclosures in an external environment may also result in condensation forming on the inside of the enclosure, resembling water ingress. This is caused by a difference in temperature between inner and outer surfaces of the enclosure and the most common solution is to fit an anti-condensation heater and breather gland within the enclosure.

When the product is subject to chemical cleaning a stainless steel enclosure is recommended although the correct grade of stainless steel must be selected. If in doubt, please consult our technical department on sales@craigandderricott.com or +44(0)1543 375 541.

ENCLOSED SWITCHGEAR

Craig & Derricott has been at the forefront of switchgear design and manufacture for more than 70 years, and in that time the requirements of the installer & end user have always been paramount in the design concept. This attitude has culminated in the design of the 'i-switch' range where a wider choice of products has been offered to the customer, all of which are simple to install and provide the user with a product that is safe and effective in use.

The 'i-switch' range provides the user with a wide choice of products to safely disconnect an item of electrical equipment from the supply and are primarily designed to comply with the following minimum requirements:-

- Provide an effective clearance between the supply and the load appropriate to the voltage applied.
- Provide a means of locking in the 'Off' position. (Padlocking)
- Provide a true indication of the contact state.
- Provide a safe disconnection from the supply even under fault conditions.

All of Craig & Derricott's products meet, and often exceed, the above requirements making each one a product of choice in today's market.



Moulded Plastic Enclosed Switchgear

A range of moulded plastic enclosed isolation equipment with sealing up to IP66. All units have a padlockable handle which allow for the insertion of up to three padlocks in the 'Off' position thus preventing the isolator being switched to the 'On' position. The units have the ability to add a selection of auxiliary blocks providing additional contacts and a choice of Neutral assemblies. All units are interlocked in the ON position preventing the lid from being removed and when padlocked in the OFF position. Compliant to IEC / BS EN 60947-3.

'N' = switched neutral (Early make, late break)
'NL'= Unswitched neutral
'EB'= Early break auxiliary contacts

Add suffix '/10' to the Cat. No. for padlocking in the 'On' position e.g. SDP253/10



Switch-Disconnectors (O-I)									
Image	Rating	Interior Switch	Format	Cat. No.	Encl. Size	Encl. Material	IP Rating	Encl. Colour	Cable Entries
	20A	GX20	6P	SDP206	A	PA / ABS	IP66	Light Grey RAL 7035	2 x M20 knock-outs top & bottom
			6P+2EB Aux	SDP206EB					
	25A	CS25	2P	SDP252	A	PA / ABS	IP66	Light Grey RAL 7035	2 x M20 knock-outs top & bottom
			3P	SDP253					
			3P+NL	SDP253NL					
			3P+N	SDP253N					
			3P+2EB Aux	SDP253EB					
	32A	CS32	2P	SDP322	A	PA / ABS	IP66	Light Grey RAL 7035	2 x M20 knock-outs top & bottom
			3P	SDP323					
			3P+NL	SDP323NL					
			3P+N	SDP323N					
			3P+2EB Aux	SDP323EB					
	40A	CS40R	2P	SDP402	B	PC / ABS	IP65	Light Grey RAL 7035	2 x M20/25 knock-outs top & bottom. Back face - 2 x M20 knock-outs
			3P	SDP403					
			3P+NL	SDP403NL					
			3P+N	SDP403N					
			3P+2EB Aux	SDP403EB					
		GX40	6P	SDP406					
			6P+2EB Aux	SDP406EB					
	63A	CS63	2P	SDP632	B	PC / ABS	IP65	Light Grey RAL 7035	2 x M20/25 knock-outs top & bottom. Back face - 2 x M20 knock-outs
			3P	SDP633					
			3P+NL	SDP633NL					
			3P+N	SDP633N					
			3P+2EB Aux	SDP633EB					
	80A	CS80	2P	SDP802	C	PA / PC	IP65	Light Grey RAL 7035	Blank sides
			3P	SDP803					
			3P+NL	SDP803NL					
			3P+N	SDP803N					
			3P+2EB Aux	SDP803EB					
	100A	CS100	2P	SDP1002	D	PA / PC	IP65	Light Grey RAL 7035	Blank sides
			3P	SDP1003					
			3P+NL	SDP1003NL					
			3P+N	SDP1003N					
			3P+2EB Aux	SDP1003EB					
Changeover Switch-Disconnectors (I-O-II)									
	20A	GX20	2P	SCODP202	A	PC / ABS	IP66	Light Grey RAL 7035	2 x M20 knock-outs top & bottom
			3P	SCODP203					
			4P	SCODP204					
	40A	GX40	2P	SCODP402	B	PC / ABS	IP65	Light Grey RAL 7035	2 x M20/25 knock-outs top & bottom. Back face - 2 x M20 knock-outs
			3P	SCODP403					
			4P	SCODP404					

Die-Cast Aluminium Enclosed Switchgear

A range of die-cast aluminium enclosed isolation equipment with sealing up to IP66 available in Light Grey (RAL 7035) or Traffic Red (RAL3020) powder coated finish. These units can be placed in environments where resistance to impacts, moisture and dust/dirt are a concern. All units have a padlockable handle which allows for the insertion of up to three padlocks in the 'Off' position thus preventing the isolator being switched to the 'On' position. All units are interlocked in the ON position preventing the lid from being removed and when padlocked in the OFF position. The option to add a selection of auxiliary blocks providing additional contacts and a choice of Neutral assemblies increases the flexibility of the product range. Compliant to IEC / BS EN 60947-3.

Enclosures finished Red (RAL 3020) are available to order, please contact our Sales team for details. Replace 'G' in the Cat. No. to 'R' e.g. SDDR253N

'N' = switched neutral (Early make, late break) | 'NL' = Unswitched neutral | 'EB' = Early break auxiliary contacts
'X' = Bottom cable entries only. For top and bottom cable entries, replace 'X' with 'Y' in the Cat. No. E.g. SDDG402Y

Add suffix '/10' to the Cat. No. for padlocking in the 'On' position e.g. SDDG253/10



Switch-Disconnectors (O-I)									
Image	Rating	Interior Switch	Format	Cat. No.	Encl. Size	Encl. Material	IP Rating	Encl. Colour	Cable Entries
	20A	GX20	6P	SDDG206	A	Die cast aluminium alloy	IP66	Light Grey RAL 7035	2xM20 on bottom face
			6P+2EB Aux	SDDG206EB					
	25A	CS25	2P	SDDG252	A	Die cast aluminium alloy	IP66	Light Grey RAL 7035	2xM20 on bottom face
			3P	SDDG253					
			3P+NL	SDDG253NL					
			3P+N	SDDG253N					
			3P+2EB Aux	SDDG253EB					
	32A	CS32	2P	SDDG322	A	Die cast aluminium alloy	IP66	Light Grey RAL 7035	2xM20 on bottom face
			3P	SDDG323					
			3P+NL	SDDG323NL					
			3P+N	SDDG323N					
			3P+2EB Aux	SDDG323EB					
	40A	CS40R	2P	SDDG402X	A	Die cast aluminium alloy	IP66	Light Grey RAL 7035	2xM25 on bottom face
			3P	SDDG403X					
			3P+NL	SDDG403NLX					
			3P+N	SDDG403NX					
			3P+2EB Aux	SDDG403EBX					
			2P	SDDG402	B	Die cast aluminium alloy	IP65	Light Grey RAL 7035	2xM25 + 1xM20 on bottom face
			3P	SDDG403					
			3P+NL	SDDG403NL					
			3P+N	SDDG403N					
			3P+2EB Aux	SDDG403EB					
		GX40	6P	SDDG406					
			6P+2EB Aux	SDDG406EB					
	63A	CS63	2P	SDDG632	B	Die cast aluminium alloy	IP65	Light Grey RAL 7035	2xM25 + 1xM20 on bottom face
			3P	SDDG633					
			3P+NL	SDDG633NL					
			3P+N	SDDG633N					
			3P+2EB Aux	SDDG633EB					
			6P	SDDG636					
			6P+2EB Aux	SDDG636EB					
	80A	CS80	3P	SDDG803	B	Die cast aluminium alloy	IP65	Light Grey RAL 7035	2xM32 + 1xM20 on bottom face
			3P+NL	SDDG803NL					
			3P+N	SDDG803N					
Changeover Switch-Disconnectors (I-O-II)									
	20A	GX20	2P	SCODDG202	A	Die cast aluminium alloy	IP66	Light Grey RAL 7035	2xM20 on bottom face
			3P	SCODDG203					
			4P	SCODDG204					
	40A	GX40	2P	SCODDG402	B	Die cast aluminium alloy	IP65	Light Grey RAL 7035	2xM25 + 1xM20 on bottom face
			3P	SCODDG403					
			4P	SCODDG404					

Technical Data Page 15 | Dimensions Page 20

Stainless Steel Enclosed Switchgear

A range of isolation equipment housed in Grade 304 stainless steel enclosures sealed to IP66. All units have a padlockable handle which allow for the insertion of up to three padlocks in the 'Off' position thus preventing the isolator being switched to the 'On' position. All units are interlocked in the ON position preventing the lid from being removed.

As a standard feature the units have the ability to add a selection of auxiliary blocks providing additional contacts and a choice of Neutral assemblies. External mounting feet in stainless steel are offered as an accessory sized to match each enclosure. The range is supplied with a handle manufactured from a material suitable to withstand cleaning products containing sodium hydroxide.

Stainless Steel Grade 316 enclosures are available on request.

'N' = switched neutral (Early make, late break) | 'NL' = Unswitched neutral | 'EB' = Early break auxiliary contacts

Switch-Disconnectors (O-I)									
Image	Rating	Interior Switch	Format	Cat. No.	Encl. Size	Encl. Material	IP Rating	Encl. Colour	Cable Entries
	20A	GX20	6P	SDS206	A	Stainless Steel Grade 304	IP66	Brushed Satin Finish	2 x M20
			6P+2EB Aux	SDS206EB					
	25A	CS25	2P	SDS252	A	Stainless Steel Grade 304	IP66	Brushed Satin Finish	2 x M20
			3P	SDS253					
			3P+NL	SDS253NL					
			3P+N	SDS253N					
			3P+2EB Aux	SDS253EB					
	32A	CS32	2P	SDS322	A	Stainless Steel Grade 304	IP66	Brushed Satin Finish	2 x M20
			3P	SDS323					
			3P+NL	SDS323NL					
			3P+N	SDS323N					
			3P+2EB Aux	SDS323EB					
	40A	CS40R	2P	SDS402	B	Stainless Steel Grade 304	IP66	Brushed Satin Finish	2 x M20 + 2 x M25
			3P	SDS403					
			3P+NL	SDS403NL					
			3P+N	SDS403N					
			3P+2EB Aux	SDS403EB					
		GX40	6P	SDS406					
			6P+2EB Aux	SDS406EB					
	63A	CS63	2P	SDS632	B	Stainless Steel Grade 304	IP66	Brushed Satin Finish	2 x M20 + 2 x M25
			3P	SDS633					
			3P+NL	SDS633NL					
			3P+N	SDS633N					
			3P+2EB Aux	SDS633EB					
Changeover Switch-Disconnectors (I-O-II)									
	20A	GX20	2P	SCODS202	A	Stainless Steel Grade 304	IP66	Brushed Satin Finish	2 x M20
			3P	SCODS203					
			4P	SCODS204					
	40A	GX40	2P	SCODS402	B	Stainless Steel Grade 304	IP66	Brushed Satin Finish	2 x M20 + 2 x M25
			3P	SCODS403					
			4P	SCODS404					

Accessories

The external fixing feet listed below can be supplied on request.

Image	Description	Cat. No.
	External Fixing Feet for 20A- 32A	EFA
	External Fixing Feet for 40A- 63A	EFB

Technical Data Page 15 | Dimensions Page 21

Stainless Steel Sloping Roof Enclosed Switchgear

A range of isolation equipment housed in Grade 316 stainless steel enclosures, supplied with a specially designed stainless steel 'sloping roof'. These units are ideally suited for hygienic environments with their associated severe cleaning routines. The design has been created to minimise areas where dirt can accumulate and incorporates a flush rear surface and universal fixing sealed to IP66.

All units are supplied with a handle manufactured from a material suitable to withstand cleaning products containing sodium hydroxide. All units have a padlockable handle which allow for the insertion of up to three padlocks in the 'Off' position thus preventing the isolator being switched to the 'On' position. All units are interlocked in the ON position preventing the lid from being removed.

'N' = switched neutral (Early make, late break) | 'EB' = Early break auxiliary contacts

Optional pre-drilled bottom entries can be supplied. For 2xM20 in Size A Enclosures add suffix '/M20' to the Cat. No. e.g. SDSSR253/M20 | For 2xM25 in Size B Enclosures add suffix '/M25' to the Cat. No. e.g. SDSSR253/M25.

Switch-Disconnectors (O-I)										
Image	Rating	Interior Switch	Format	Cat. No.	Encl. Size	Encl. Material	IP Rating	Encl. Colour	Roof Angle	Cable Entries
	20A	GX20	6P	SDSSR206	A	Stainless Steel Grade 316	IP66	Brushed Satin Finish	15° Slope	None
			6P+2EB AUX	SDSSR206EB						
	25A	CS25	2P	SDSSR252	A	Stainless Steel Grade 316	IP66	Brushed Satin Finish	15° Slope	None
			3P	SDSSR253						
			3P+2EB AUX	SDSSR253EB						
			3P+N	SDSSR253N						
	32A	CS32	2P	SDSSR322	A	Stainless Steel Grade 316	IP66	Brushed Satin Finish	15° Slope	None
			3P	SDSSR323						
			3P+2EB AUX	SDSSR323EB						
			3P+N	SDSSR323N						
	40A	CS40R	2P	SDSSR402	B	Stainless Steel Grade 316	IP66	Brushed Satin Finish	15° Slope	None
			3P	SDSSR403						
			3P+2EB AUX	SDSSR403EB						
			3P+N	SDSSR403N						
		GX40	6P	SDSSR406						
			6P+2EB AUX	SDSSR406EB						
	63A	CS63	2P	SDSSR632	B	Stainless Steel Grade 316	IP66	Brushed Satin Finish	15° Slope	None
			3P	SDSSR633						
			3P+2EB AUX	SDSSR633EB						
			3P+N	SDSSR633N						
	80A	CS80	2P	SDSSR802	B	Stainless Steel Grade 316	IP66	Brushed Satin Finish	15° Slope	None
			3P	SDSSR803						
			3P+2EB AUX	SDSSR803EB						
			3P+N	SDSSR803N						

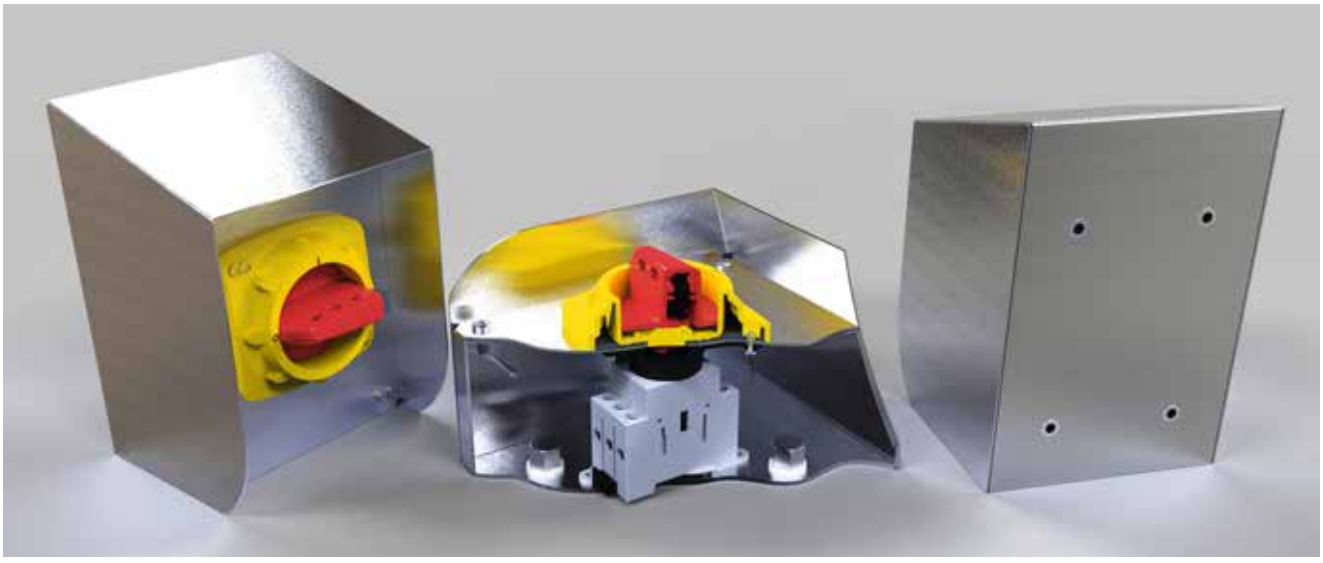

Section view showing the enclosures flush rear face with 'sealed' fixings that ensure the IP66 seal is maintained.

Flush Mounting Enclosed Switchgear

A range of flush mounting isolation equipment ranging 20A to 63A, supplied with a sheet steel back box and stainless steel fascia plate sealed up to IP65. All units are supplied with a handle manufactured from a material suitable to withstand cleaning products containing sodium hydroxide. Suitable for installation in kitchens, laboratories, food processing areas, hospitals and many other areas.

Installation

Whilst the joint between the isolating switch and the stainless steel fascia plate is factory sealed to IP65 min, when installed, the fascia to mounting surface seal is the responsibility of the installer.

To maintain the sealing overall, an efficient bond must be made using some form of gasketing material. This is particularly vital on tiled surfaces where grout lines can channel moisture down the wall.

A continuous bead of moisture resistant mastic is a simple way of providing a seal, and can improve the appearance of the final assembly on an uneven surface.

Switch-Disconnectors (O-I)									
Image	Rating	Interior Switch	Format	Cat. No.	IP Rating	Encl. Size	Fascia plate Material	Back Box Material	Cable Entries
	20A	GX20	2P	SDFL202	Isolating switch to stainless steel fascia plate IP65	A	Brushed Stainless Steel Grade 304	Zinc Plated Sheet Steel	Knockouts in back box
			3P	SDFL203					
			4P	SDFL204					
	32A	GX32	2P	SDFL322	Isolating switch to stainless steel fascia plate IP65	B	Brushed Stainless Steel Grade 304	Zinc Plated Sheet Steel	Knockouts in back box
			3P	SDFL323					
			4P	SDFL324					
	40A	GX40	2P	SDFL402	Isolating switch to stainless steel fascia plate IP65	B	Brushed Stainless Steel Grade 304	Zinc Plated Sheet Steel	Knockouts in back box
			3P	SDFL403					
			4P	SDFL404					
	63A	GN63	2P	SDFL632	Isolating switch to stainless steel fascia plate IP65	C	Brushed Stainless Steel Grade 304	Zinc Plated Sheet Steel	Knockouts in back box
			3P	SDFL633					
			4P	SDFL634					

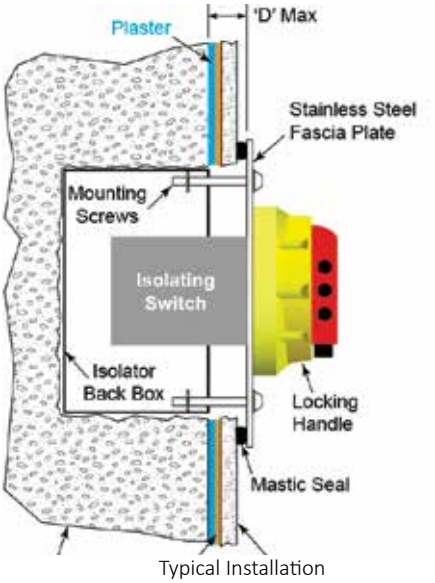

Typical Installation
'D' max = 20mm with standard length mounting screws

Technical Data Page 15 | Dimensions Page 21

Sheet Steel Enclosed Switchgear

A range of sheet steel enclosed isolation equipment sealed to IP66, providing the user with a robust and cost effective assembly. Each unit is supplied with a polyester powder coated finish in Light Grey (RAL 7035). External mounting feet in stainless steel are offered as an accessory sized to match each enclosure. Size A- Cat. No. EFA / Size B- Cat. No. EFB

All units have a padlockable handle which allow for the insertion of up to three padlocks in the 'Off' position thus preventing the isolator being switched to the 'On' position. All units are interlocked in the ON position preventing the lid from being removed. Standard shackle diameter Ø6.4 Earth continuity terminals are provided in the base and lid of each enclosure. A selection of auxiliary blocks can be provided as additional contacts as well as a choice of Neutral assemblies.

'N' = switched neutral (Early make, late break) | 'NL' = Unswitched neutral | 'EB' = Early break auxiliary contacts

Switch-Disconnectors (O-I)									
Image	Rating	Interior Switch	Format	Cat. No.	Encl. Size	Encl. Material	IP Rating	Encl. Colour	Cable Entries
	20A	GX20	6P	SDMG206	A	Sheet Steel	IP66	Light Grey RAL 7035	2 x M20
			6P+2EB Aux	SDMG206EB					
	25A	CS25	2P	SDMG252	A	Sheet Steel	IP66	Light Grey RAL 7035	2 x M20
			3P	SDMG253					
			3P+NL	SDMG253NL					
			3P+N	SDMG253N					
			3P+2EB Aux	SDMG253EB					
	32A	CS32	2P	SDMG322	A	Sheet Steel	IP66	Light Grey RAL 7035	2 x M20
			3P	SDMG323					
			3P+NL	SDMG323NL					
			3P+N	SDMG323N					
			3P+2EB Aux	SDMG323EB					
	40A	CS40R	2P	SDMG402	B	Sheet Steel	IP66	Light Grey RAL 7035	2 x M20 + 2 x M25
			3P	SDMG403					
			3P+NL	SDMG403NL					
			3P+N	SDMG403N					
			3P+2EB Aux	SDMG403EB					
		GX40	6P	SDMG406					
			6P+2EB Aux	SDMG406EB					
	63A	CS63	2P	SDMG632	B	Sheet Steel	IP66	Light Grey RAL 7035	2 x M20 + 2 x M25
			3P	SDMG633					
			3P+NL	SDMG633NL					
			3P+N	SDMG633N					
			3P+2EB Aux	SDMG633EB					
	80A	GA080A	2P	SDMG802	C	Sheet Steel	IP66	Light Grey RAL 7035	-
			3P	SDMG803					
			3P+1EB	SDMG803/1EB					
			3P+N	SDMG803N					
			3P+NL	SDMG803NL					
	100A	GA0100A	2P	SDMG1002	C	Sheet Steel	IP66	Light Grey RAL 7035	-
			3P	SDMG1003					
			3P+1EB	SDMG1003/1EB					
			3P+N	SDMG1003N					
			3P+NL	SDMG1003NL					
Changeover Switch-Disconnectors (I-O-II)									
	20A	GX20	2P	SCODMG202	A	Sheet Steel	IP66	Light Grey RAL 7035	2 x M20
			3P	SCODMG203					
			4P	SCODMG204					
	40A	GX40	2P	SCODMG402	B	Sheet Steel	IP66	Light Grey RAL 7035	2 x M20 + 2 x M25
			3P	SCODMG403					
			4P	SCODMG404					

Accessories

The external fixing feet listed below can be supplied on request.

Image	Description	Cat. No.
	External Fixing Feet for 20A- 32A	EFA
	External Fixing Feet for 40A- 63A	EFB
	External Fixing Feet for 80A- 100A	EFC

Fixed Lid Accessories (Applicable for products on pages 2 - 10)

All of the accessories listed below can be retrofitted. One block can be fitted either side of the main assembly on all of the 3 pole Switch-Disconnector interiors.

Description	Cat. No.
Auxiliary Contact- 2 Early Break	SAUX2EB
Auxiliary Contact- 1 N/O + 1 N/C	SAUXCO
80A- 100A Auxiliary Contact- 1 Early Break for GA switches	SAUX1EBL
80A- 100A Auxiliary Contact- 1 N/O + 1 N/C for GA switches	SAUXCOL
25A- 40A Compact Neutral (Unswitched)	SNLC40
63A Neutral (Unswitched)	SNL63
80A Neutral (Unswitched) for CS switches	SNL80
100A Neutral (Unswitched) for CS switches	SNL100
80A- 100A Neutral (Unswitched) for GA switches	SNL100L
125A Neutral (Unswitched)	SNL125
160A Neutral (Unswitched)	SNL160
200A Neutral (Unswitched)	SNL200
25A Neutral (Switched)	SSP25
40A Neutral (Switched)	SSP40
63A Neutral (Switched)	SSP63
80A Neutral (Switched) for CS switches	SSP80
100A Neutral (Switched) for CS switches	SSP100
80A Neutral (Switched) for GA switches	SSP80L
100A Neutral (Switched) for GA switches	SSP100L
125A Neutral (Switched)	SSP125
160A Neutral (Switched)	SSP160
200A Neutral (Switched)	SSP200
External Fixing Feet for 20A- 32A	EFA
External Fixing Feet for 40A- 63A	EFB
External Fixing Feet for 80A- 100A	EFC

Auxiliary Contact Block

Data supplied against tests to IEC/BS EN 60947-5-1

Application	Sym.	Category	Type 'A'
Thermal current	I_{th}		10A
Rated insulation voltage	U_i		690V
Utilisation Category	-	AC15	8A@110V / 8A@240V / 3A@400V / 1A@690V
		DC13	-
		Pure Resistive	-
Max Cond.	mm^2		1.5
Tight Torque	Nm		0.6

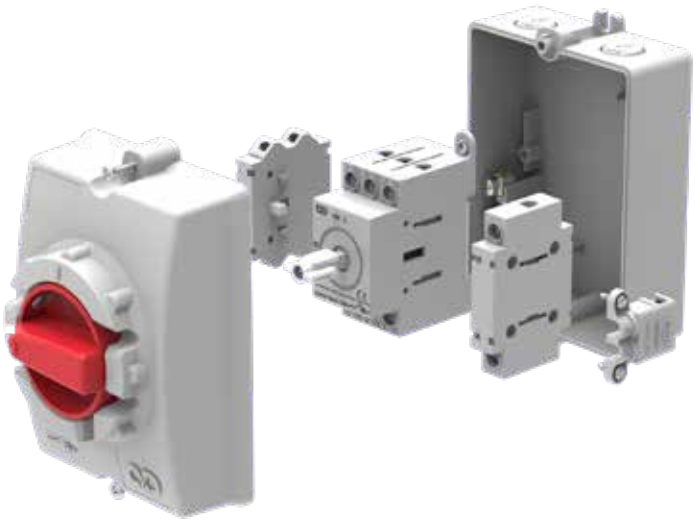

Exploded view showing a type CS switch disconnector interior with Auxiliary/Neutral options

Sheet Steel Flagged Switchgear

The Flag Indicator is viewed through a 4mm thick polycarbonate window in the enclosure door providing the user with confirmation of the switch contact state. All assemblies are sealed to IP65 and are supplied with 2 C/O auxiliary blocks wired down to terminals. The range has a padlockable handle which allows for the insertion of up to three padlocks in the 'Off' position thus preventing the isolator being switched to the 'On' position. The door interlock handle can be defeated to enable emergency opening or for testing purposes. All assemblies are supplied with the switching element mounted on a removable internal 2mm galvanised steel chassis plate.

The standard range of Flag isolators are supplied with silver plated conductors but if the product is to be installed in an environment where there is a high amount of Hydrogen Sulfide and Sulphur dioxide we offer the option of Tin plated conductors in order to prevent the growth of Silver whiskers. Stainless Steel Grade 304 enclosures, Castell Lock options and EX Zone 22 versions are available on request. Contact your local Area Sales Manager for more information.

'N' = switched neutral | Add suffix 'T' to the beginning of any Cat. No. for tin plate contacts e.g. TSDS00323N/F

Switch-Disconnectors (O-I)							
Image	Rating	Format	Cat. No.	Encl. Size	Encl. Material	IP Rating	Encl. Colour
	32A	3P+N	SDG00323N/F	1F	Sheet Steel	IP65	Light Grey RAL 7035
	63A	3P+N	SDG00633N/F	1F	Sheet Steel	IP65	Light Grey RAL 7035
	100A	3P+N	SDG01003N/F	2F	Sheet Steel	IP65	Light Grey RAL 7035
	125A	3P+N	SDG01253N/F	2F	Sheet Steel	IP65	Light Grey RAL 7035
	200A	3P+N	SDG02003N/F	4F	Sheet Steel	IP65	Light Grey RAL 7035
	250A	3P+N	SDG02503N/F	4F	Sheet Steel	IP65	Light Grey RAL 7035
	400A	3P+N	SDG04003N/F	5F	Sheet Steel	IP65	Light Grey RAL 7035
Fuse Combination Units (O-I)							
	32A	3P+N	SDFG00323N/F	1F	Sheet Steel	IP65	Light Grey RAL 7035
	63A	3P+N	SDFG00633N/F	1F	Sheet Steel	IP65	Light Grey RAL 7035
	100A	3P+N	SDFG01003N/F	2F	Sheet Steel	IP65	Light Grey RAL 7035
	125A	3P+N	SDFG01253N/F	2F	Sheet Steel	IP65	Light Grey RAL 7035
	160A	3P+N	SDFG01603N/F	3F	Sheet Steel	IP65	Light Grey RAL 7035
	200A	3P+N	SDFG02003N/F	4F	Sheet Steel	IP65	Light Grey RAL 7035
	250A	3P+N	SDFG02503N/F	4F	Sheet Steel	IP65	Light Grey RAL 7035

Hinged Door Accessories (Applicable for products on pages 12 - 14)

Add-on auxiliary blocks are available for all hinged door products. All auxiliaries are supplied as 1 N/O+1 N/C pair. All N/O auxiliary contacts are early break with respect to the main poles when switching from 'On' to 'Off'.

All of the Fuse Combination Units are supplied fitted with a set of fully rated IEC/BS EN 60269 (BS88) fuse links. Replacements can be supplied as individual fuse links and can be fitted to a lower rating to suit a particular load: please refer to the rating table below to maintain the correct size/tag format.

Terminal protection is provided on all items for live incoming terminals; spare terminal covers are available for replacement or extending the protection to the outgoing terminals. (Not available for 800A & 1000A switch-disconnectors.)

Auxiliary Contacts		
Image	Description	Cat. No.
 A B C	Auxiliary Contact for 32A- 200A Switch-Disconnectors (Type A)	SAUXCO
	Auxiliary Contact for 63A- 160A Fuse Combination (Type B)	SAUXKITA
	Auxiliary Contact for 250A Switch-Disconnectors (Type C)	SAUXKITB
	Auxiliary Contact for 400A- 800A Switch-Disconnectors & 200A- 400A Fuse Combination (Type C)	SAUXKITC
	Auxiliary Contact for 1000A Switch-Disconnectors & 630A Fuse Combination Units (Type D)	SAUXKITD
Fuse Links		
	32A Fuse Link. BS Fuse format A2, A3. Fuse Fixing CRS (mm) 73 nom.	SFL32
	63A Fuse Link. BS Fuse format A2, A3. Fuse Fixing CRS (mm) 73 nom.	SFL63
	100A Fuse Link. BS Fuse format A4. Fuse Fixing CRS (mm) 94 nom.	SFL100
	125A Fuse Link. BS Fuse format A4. Fuse Fixing CRS (mm) 94 nom.	SFL125
	160A Fuse Link. BS Fuse format B1, B2. Fuse Fixing CRS (mm) 111 nom.	SFL160
	200A Fuse Link. BS Fuse format B1-B2. Fuse Fixing CRS (mm) 111 nom.	SFL200
	250A Fuse Link. BS Fuse format B1-B2. Fuse Fixing CRS (mm) 111 nom.	SFL250
	315A Fuse Link. BS Fuse format B1-B4. Fuse Fixing CRS (mm) 111 nom.	SFL315
	400A Fuse Link. BS Fuse format B1-B4. Fuse Fixing CRS (mm) 111 nom.	SFL400
	630A Fuse Link. BS Fuse format C1-C3. Fuse Fixing CRS (mm) 133/184 nom.	SFL630
Terminal Covers		
	Individual Spare Terminal Cover for 200A Switch-Disconnectors & Fuse Combination	STS1
	Individual Spare Terminal Cover for 250A- 400A Switch-Disconnectors & Fuse Combination	STS2
	Individual Spare Terminal Cover for 630A Fuse Combination	STS3
	Set of 4 Spare Terminal Cover for 630A Switch-Disconnectors	STS4

Technical Specification - Fixed Lid Enclosed Switchgear

Data supplied against tests to IEC/BS EN 60947-3

Application	Unit	Category	20A	25A	32A		40A		63A		80A		100A	
Interior Switch	-		GX20	CS25	GX32	CS32	GX40	CS40R	GN63	CS63	CS80	GA080A	CS100	GA100A
Rated thermal current (I_{the})	A		20	25	32	32	40	40	63	63	80	80	100	100
Rated insulation voltage (U_i)	V		690	690	690	690	690	690	690	690	690	1000	1000	1000
Rated impulse voltage (U_{imp})	kV		6	6	6	6	6	6	6	6	6	8	8	8
Rated operational power (Single phase)	kW	240V- AC23	-	3.7	-	4.8	-	6.0	-	9.4	-	-	-	-
Rated operational power (Three phase)	kW	380/440- AC23	7.5	11	15	15	18.5	15	30	25	30	45	59	55
		500V- AC23	7.5	15	15	15	15	15	30	30	37	-	63	-
		690V- AC23	7.5	15	15	15	15	15	30	30	30	45	51	45
Rated short time withstand current (1 sec) (I_{cw})	A		250	500	800	600	800	600	1600	1300	1400	2500	2600	250
Max. fuse size for short circuit protection (gG Characteristic)	kA	10kA	20	35	35	35	40	40	63	80	80	80	160	100
		25kA	16	32	35	32	35	32	63	63	63	80	160	100
		50kA	-	32	-	32	-	32	63	63	63	80	160	100
Recommended connecting capacity	-	Terminal type												
	mm²	Flexible cable	2.5 x 2	6	6 x 2	6	6 x 2	6	10	16	16	35	50	50
	mm²	Rigid cable	2.5 x 2	10	10 x 2	10	10 x 2	10	16	25	25	35	25	50
	Nm	Tightening torque	1.0	1.2	1.0	1.2	1.0	1.2	1.2	1.2	1.2	5-6	5	5-6

Terminal Markings

O-I (90° indexing)

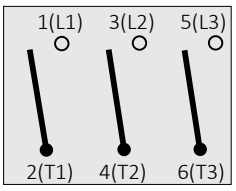

O-I (90° indexing)

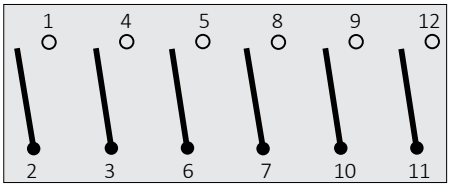

I-O-II (90° indexing)

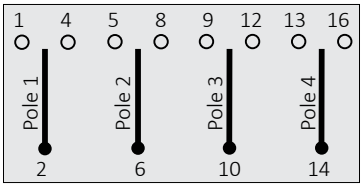

Technical Specification - Photovoltaic (PV)

For products on page 4. Data supplied against tests to IEC/BS EN 60947-3.

2 Pollution Degree 2

Cat. No.		Rated Operational Voltage d.c.					
		300/400V	600V	800V	1,000V	1,200V²	1,500V²
EPV162	Rated Operational Current (DC21B)	16A	16A	16A	16A	-	-
PVP164		-	-	-	-	16A	16A
EPV252		25A	25A	25A	16A	-	-
EPV253		-	-	-	25A	-	-
PVP254		-	-	-	-	20A	16A
EPV322		32A	32A	-	-	-	-
EPV323		-	-	32A	32A	-	-
PVP324		-	-	-	-	25A	20A
EPV402		40A	-	-	-	-	-
EPV403		-	40A	40A	-	-	-
PVP404		-	-	-	40A	32A	25A
PVP1622	Rated Operational Current (DC21B)	16A	16A	16A	16A	-	-
PVP2522		25A	25A	25A	16A	-	-
PVP3222		32A	32A	-	-	-	-
PVP4022		40A	-	-	-	-	-

Technical Specification

Data supplied against tests to IEC/BS EN 60947-3. * All AC21, AC22 & AC23 tests carried out at 415V

Sheet Steel Switch-Disconnectors (O-I)																
Application	Sym	Unit	Category	32	63		80	100	125	160	200	250	400	630	800	1000
				3P	3P	6P	3P	3P	3P	3P	3P	3P	3P	3P	3P	3P
Rated thermal current	I_{the}	A		32	63	63	80	100	125	160	200	250	400	630	720	1000
Rated insulation voltage	U_i	V		690	690	690	690	1000	1000	1000	1000	1000	1000	1000	1000	1000
Rated impulse voltage	U_{imp}	kV		6	6	6	6	8	8	8	8	12	12	12	12	8
Rated operational current (AC)	I_e	A	400V- AC21A	32	63	63	80	100	125	160	200	250*	400*	630*	800*	1000*
			690V- AC21A	32	63	63	80	100	125	160	200	250	400	630	800	1000
			400V- AC22A	-	-	-	-	100	125	160	200	250*	400*	630*	800*	1000*
			690V- AC22A	-	-	-	-	100	125	160	160	250	400	630	800	-
			400V- AC23A	29	48	48	56	100	112	128	128	250*	400*	630*	720*	1000
			690V- AC23A	17	33	33	33	-	-	-	-	250	350	350	350	-
Rated operational current (DC) (/ poles in series)	I_e	A	Up to 48V- DC21A	32/1	63/1	63/1	80/1	-	-	-	-	250/2	400/2	630/1	800/1	1000/1
			220V- DC21A	32/3	63/4	1/1	80/4	-	-	-	-	250/2	400/2	630/2	800/2	1000/3
			Up to 48V- DC22A	-	-	-	-	-	-	-	-	250/2	400/1	630/1	800/1	-
			220V- DC22A	-	-	-	-	-	-	-	-	250/2	400/2	630/2	800/2	-
			Up to 48V- DC23A	-	-	-	-	-	-	-	-	250/2	400/1	630/1	800/1	-
			220V- DC23A	-	-	-	-	-	-	-	-	250/2	400/2	630/2	630/2	-
Rated operational power	P_e	kW	400/415V- AC23A	15	25	25	30	59	63	75	75	132	200	315	355	400
			690V- AC23A	15	30	30	30	51	55	55	55	200	315	355	355	-
Short circuit making capacity	I_{cm}	kA	Peak value	1.4	2.9	2.9	3.0	3.7	4.0	5.0	5.0	35	65	80	80	105
Short circuit withstand (1sec)	I_{cw}	kA	rms value	0.6	1.3	1.3	1.4	2.6	2.8	3.0	3.0	8	17	17	17	50
Min. mechanical endurance		-	Operations (10^3)	250	250	500	250	50	50	50	50	16	10	10	10	6
Min. electrical endurance		-	415V- at 0.65 pf	-	-	-	-	-	-	-	-	1,000	1,000	500	500	500
Connecting capacity		-	Terminal type													
		mm²	Min/Max	2.5 / 10	2.5 / 25	2.5 / 25	2.5 / 25	-/50	-/70	-/70	-/95	120	2 x 150	2 x 185	2 x 240	60 x 5
		mm	Stud/Cu palm width	-	-	-	-	-	-	-	8 x 25	10 x 30	10 x 30	12 x 40	12 x 40	12 x 60
		Nm	Tightening torque	1.2	1.2	1.2	1.2	5	5	5	10	35	35	50	50	50

Sheet Steel Fuse Combination Units (O-I)														
Application		Sym	Unit	Category	32	63	100	125	160	200	250	315	400	630
Rated thermal current		I_{the}	A		32	63	100	125	160	200	250	315	400	630
Rated insulation voltage		U_i	V		750	750	750	750	750	1000	1000	1000	1000	1000
Rated impulse voltage		U_{imp}	kV		12	12	12	12	12	12	12	12	12	12
Rated operational current	AC	I_e	A	415V- AC23A	32	63	100	125	160	200	250	315	400	630
	DC*			220V- DC23A	-	-	100	125	160	200	250	315	400	630
Rated making capacity (AC23A)			A	415V, 0.35 pf	320	630	1,000	1,250	1,600	2,000	2,500	3,150	4,000	6,300
Rated breaking capacity (AC23A)			A	415V, 0.35 pf	256	504	800	1,000	1,280	1,600	2,000	2,520	3,200	5,040
Rated Conditional (Fused) short circuit			kA	S/C current rms	80	80	80	80	80	80	80	80	80	80
			A	back-up fuse	32	63	100	125	160	200	250	315	400	630
Min. mechanical endurance			-	Operations	25,000	25,000	15,000	15,000	15,000	10,000	10,000	10,000	10,000	6,000

Technical Specification

Data supplied against tests to IEC/BS EN 60947-3

Sheet Steel Fuse Combination Units (O-I)													
Application	Sym	Unit	Category	32	63	100	125	160	200	250	315	400	630
Min. electrical endurance		-	415V- at 0.65 pf	1,500	1,500	1,000	1,000	1,000	1,000	1,000	1,000	1,000	1,000
BS fuse format				A2	A2	A4	A4	B1, B2	B1, B2	B1, B2	B1, B4	B1, B4	C1, C3
Connecting capacity		-	Terminal type										
		mm^2	Min/Max	16	25	95	95	120	150	185	240	300	400
		mm	Stud/Cu palm width	-	-	8x20	8x20	8x20	10x25	10x25	10x25	10x25	12x50
		Nm	Tightening torque	2.5	2.5	10	12	16	35	35	35	35	50

Sheet Steel Changeover Switch-Disconnectors (I-O-II)											
Application	Sym	Unit	Category	63	100	125	160	200	250	400	630
Rated thermal current	I_{the}	A		63	100	125	160	200	250	400	630
Rated insulation voltage	U_i	V		750	750	1000	1000	1000	1000	1000	1000
Rated impulse voltage	U_{imp}	kV		6	6	6	6	6	12	12	12
Rated operational current	I_e	A	415V- AC22A	63	100	125	160	200	250	400	630
Rated making capacity (AC23A)		A	415V, 0.35 pf	630	630	1,250	1,600	2,000	2,500	4,000	6,300
Rated breaking capacity (AC23A)		A	415V, 0.35 pf	504	504	1,000	1,280	1,600	2,000	3,200	5,040
Short circuit current		kA	rms (with fuses)	80	80	80	80	80	100	100	80
Rated S/C making capacity		kA	Peak	15	15	20	20	20	30	40	50
Min. mechanical endurance		-	Operations	20,000	20,000	10,000	10,000	10,000	10,000	10,000	10,000
Min. electrical endurance		-	415V- at 0.65 pf	2,500	1,500	1,000	1,000	1,000	1,000	1,000	500
Connecting capacity		-	Terminal type								
		mm^2	Max	35	35	95	95	95	240	300	400
		mm	Stud/Cu palm width	6/12	6/12	8/22	8/22	8/22	10/25	10/25	12/50
		Nm	Tightening torque	3	3	10	10	10	30	45	50

Flagged Switch-Disconnectors (O-I)										
Application	Sym	Unit	Category	32	63	100	125	160	200	250
Rated thermal current	I_{the}	A		32	63	100	125	160	200	250
Rated insulation voltage	U_i	V		750	750	750	750	750	750	750
Rated impulse voltage	U_{imp}	kV		12	12	12	12	12	12	12
Rated operational current	I_e	A	415V- AC23A	32	63	100	125	160	200	250
			220V- DC23A	-	-	100	125	160	200	250
Rated making capacity (AC23A)		A	415V, 0.35 pf	320	630	1,000	1,250	1,600	2,000	2,500
Rated breaking capacity (AC23A)		A	415V, 0.35 pf	256	504	800	1,000	1,280	1,600	2,000
Rated Conditional (Fused) short circuit		kA	S/C current rms	80	80	80	80	80	80	80
		A	back-up fuse	32	63	100	125	160	200	250
Min. mechanical endurance		-	Operations	25,000	25,000	15,000	15,000	15,000	10,000	10,000
Min. electrical endurance		-	415V- at 0.65 pf	1,500	1,500	1,000	1,000	1,000	1,000	1,000
BS fuse format				A2	A2	A4	A4	B1, B2	B1, B2	B1, B2
Connecting capacity		-	Terminal type							
		mm^2	Min/Max	16	25	95	95	120	240	240
		mm	Stud/Cu palm width	-	-	8x20	8x20	8x20	10x25	10x25
		Nm	Tightening torque	2.5	2.5	10	12	16	25	30

Technical Specification

Data supplied against tests to IEC/BS EN 60947-3. * All AC21, AC22 & AC23 tests carried out at 415V

Glass Fibre Reinforced Polycarbonate Switch-Disconnectors (O-I)															
Application	Sym	Unit	Category	32	63	80	100	125	160	200	250	400	630	800	1000
Rated thermal current	I_{the}	A		32	63	80	100	125	160	200	250	400	630	720	1000
Rated insulation voltage	U_i	V		690	690	690	1000	1000	1000	1000	1000	1000	1000	1000	1000
Rated impulse voltage	U_{imp}	kV		6	6	6	8	8	8	8	12	12	12	12	8
Rated operational current (AC)	I_e	A	400V- AC21A	32	63	80	100	125	160	200	250*	400*	630*	800*	1000*
			690V- AC21A	32	63	80	100	125	160	200	250	400	630	800	1000
			400V- AC22A	-	-	-	100	125	160	200	250*	400*	630*	800*	1000*
			690V- AC22A	-	-	-	100	125	160	160	250	400	630	800	-
			400V- AC23A	29	48	56	100	112	128	128	250*	400*	630*	720*	1000
			690V- AC23A	17	33	33	-	-	-	-	250	350	350	350	-
Rated operational current (DC) (/poles in series)	I_e	A	Up to 48V- DC21A	32/1	63/1	80/1	-	-	-	-	250/2	400/2	630/1	800/1	1000/1
			220V- DC21A	32/3	63/4	80/4	-	-	-	-	250/2	400/2	630/2	800/2	1000/3
			Up to 48V- DC22A	-	-	-	-	-	-	-	250/2	400/1	630/1	800/1	-
			220V- DC22A	-	-	-	-	-	-	-	250/2	400/2	630/2	800/2	-
			Up to 48V- DC23A	-	-	-	-	-	-	-	250/2	400/1	630/1	800/1	-
			220V- DC23A	-	-	-	-	-	-	-	250/2	400/2	630/2	630/2	-
Rated operational power	P_e	kW	400/415V- AC23A	15	25	30	59	63	75	75	132	200	315	355	400
			690V- AC23A	15	30	30	51	55	55	55	200	315	355	355	-
Short circuit making capacity	I_{cm}	kA	Peak value	1.4	2.9	3.0	3.7	4.0	5.0	5.0	35	65	80	80	105
Short circuit withstand (1sec)	I_{cw}	kA	rms value	0.6	1.3	1.4	2.6	2.8	3.0	3.0	8	17	17	17	50
Min. mechanical endurance		-	Operations (10^3)	250	250	250	50	50	50	50	16	10	10	10	6
Min. electrical endurance		-	415V- at 0.65 pf	-	-	-	-	-	-	-	1,000	1,000	500	500	500
Connecting capacity		-	Terminal type												
		mm^2	Min/Max	2.5 / 10	2.5 / 25	2.5 / 25	-/70	-/70	-/70	-/95	120	2 x 150	2 x 185	2 x 240	60 x 5
		mm	Stud/Cu palm width	-	-	-	-	-	-	8 x 25	10 x 30	10 x 30	12 x 40	12 x 40	12 x 60
		Nm	Tightening torque	1.2	1.2	1.2	5	5	5	10	35	35	50	50	50

Moulded Plastic Switchgear

Sizes A & B

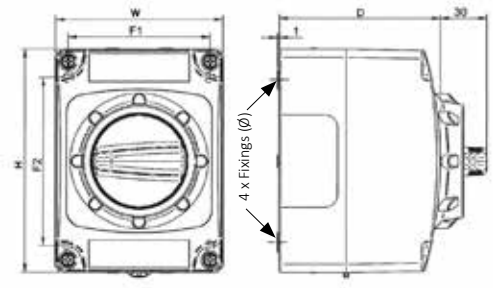

Sizes C & D

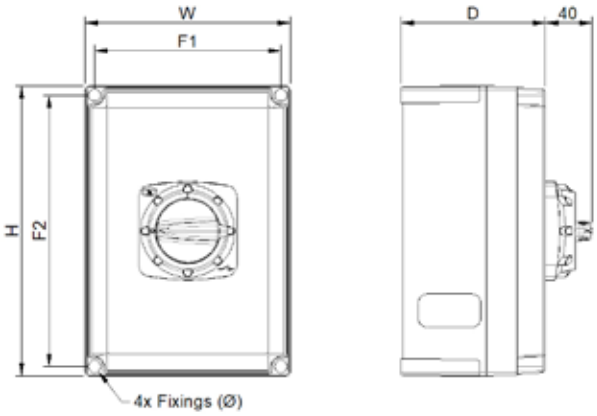

Size E

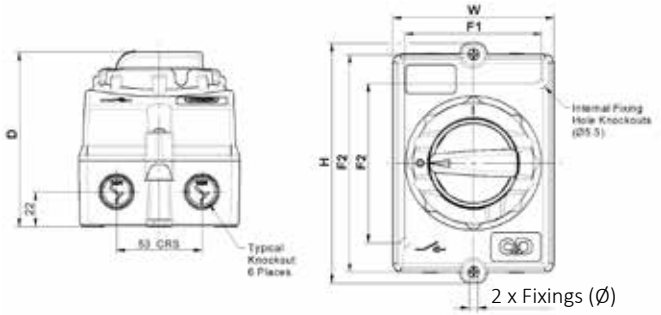

Encl. Size	Overall Dims.			Fixing details			Knockouts		
	H	W	D	F1	F2	Ø	Top	Btm	Back
A	135	100	95	85	98.5	5.5	2x M20	2x M20	2x M20
B	175	130	115	115	135	5.5	2x Combination M20 / M25		2x M20
C	255	180	125	163.5	238.5	4.5	Plain sided		
D	255	180	175	163.5	238.5	4.5	Plain sided		
E	149	100	108.5	85	136.5 / 98.5	5.5	2x M20	2x M20	2x M20

Photovoltaic (PV) Switchgear

Size B

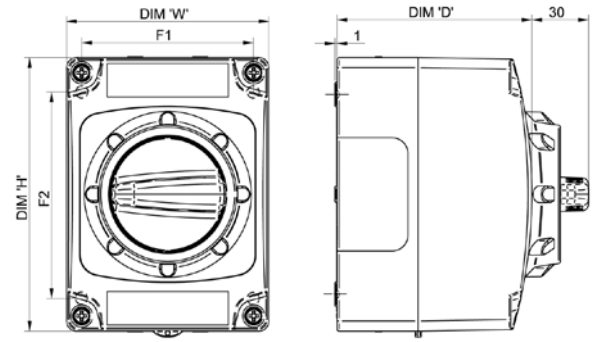

Size E

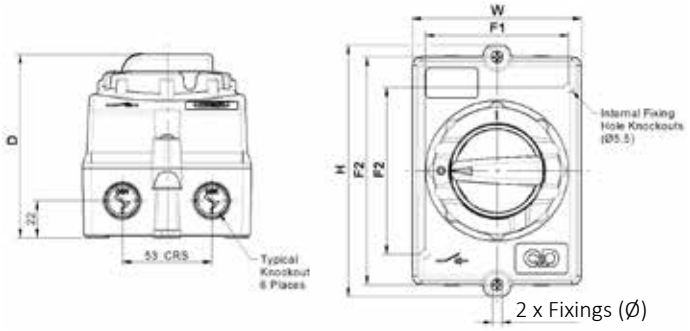

Encl. Size	Overall Dims.			Fixing details			Knockouts		
	H	W	D	F1	F2	Ø	Top	Btm	Back
B	175	130	115	115	135	5.5	2x Combination M20 / M25		2x M20
E	149	100	108.5	85	136.5 / 98.5	5.5	2x M20	2x M20	2x M20

Interior Switch

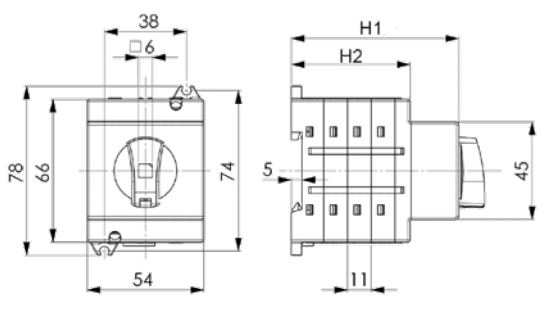

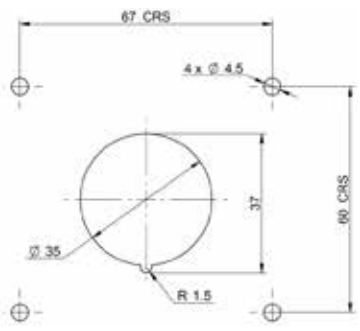

Cat. No.	H1	H2
SPV162	50.5	28
SPV164	72.5	50
SPV1622*1		
SPV252	50.5	28
SPV253	61.5	39
SPV254	72.5	50
SPV2522*1		
SPV322	50.5	28
SPV323	61.5	39
SPV324	72.5	50
SPV322*1		
SPV402	50.5	28
SPV403	61.5	39
SPV404	72.5	50
SPV4022*1		

Die-Cast Aluminium Switchgear

Size A

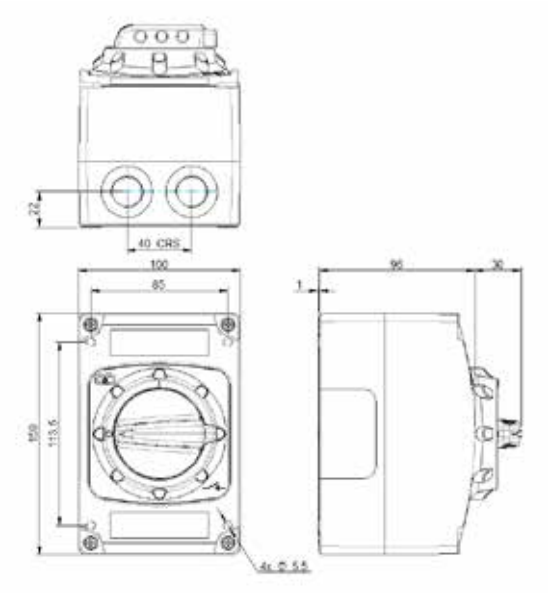

Size B

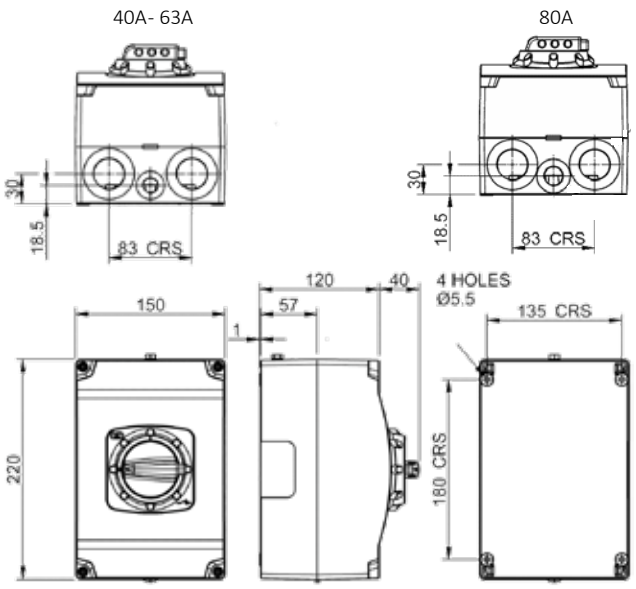

Size C

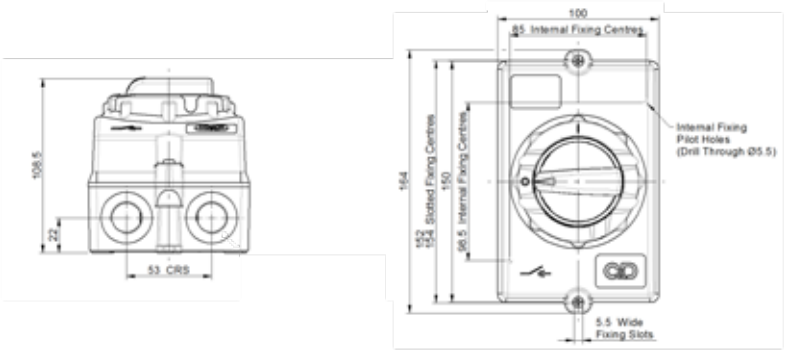

Rating	Cat. No.	Cable Entries					
		Enclosure A		Enclosure B		Enclosure C	
		Top	Bottom	Top	Bottom	Top	Bottom
20A- 32A	Standard	--	2 x M20	--	--	--	2x M25
	Suffix X	--	2x M25	--	--	--	2x M25
	Suffix Y	2x M25	2x M25	--	--	2x M25	2x M25
40A	Standard	--	2x M25	--	2x M25 + 1x M20	--	2x M20
	Suffix X	--	2x M25	--	2x M32 + 1x M16	--	2x M25
	Suffix Y	2x M25	2x M25	2 x M32	2x M32 + 1x M16	2x M25	2x M25
63A	Standard	--	--	--	2x M25 + 1x M20	--	--
	Suffix X	--	--	--	2x M32 + 1x M16	--	--
	Suffix Y	--	--	2 x M32	2x M32 + 1x M16	--	--
80A	Standard	--		--	2x M32 + 1x M20	--	
	Suffix X	--		--	2x M32 + 1x M16	--	
	Suffix Y	--		2 x M32	2x M32 + 1x M16	--	

Sheet Steel & Stainless Steel Switchgear

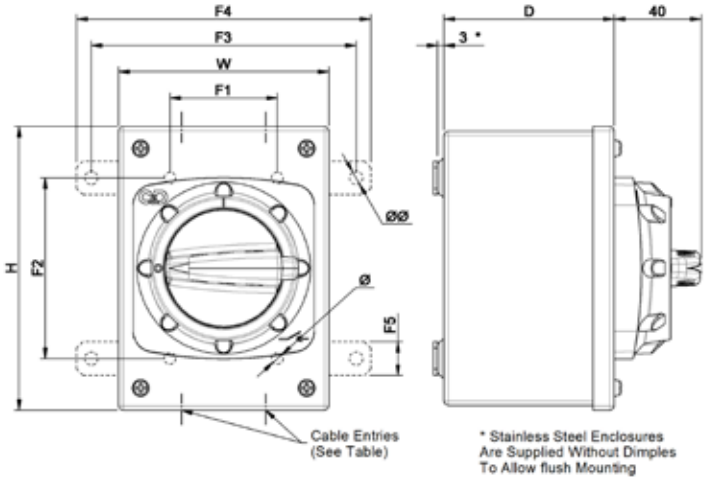

Encl. Size	Overall Dims.			Internal Fixings			External EFA/EFB Fixings				Cable Entries	
	H	W	D	F1	F2	Ø	F3	F4	F5	ØØ	Top	Bottom
Size A	135	100	80	51	86	5.5	126	140	16	6.35	--	2x M20
Size B	175	130	100	81	126	5.5	155	178	16	6.35	2x M20	2x M25
Size C	310	200	100	146	256	6.5	228	249	20	6.35	Centre mark dimples for on-site drilling to suit	

Stainless Steel Sloping Roof Switchgear

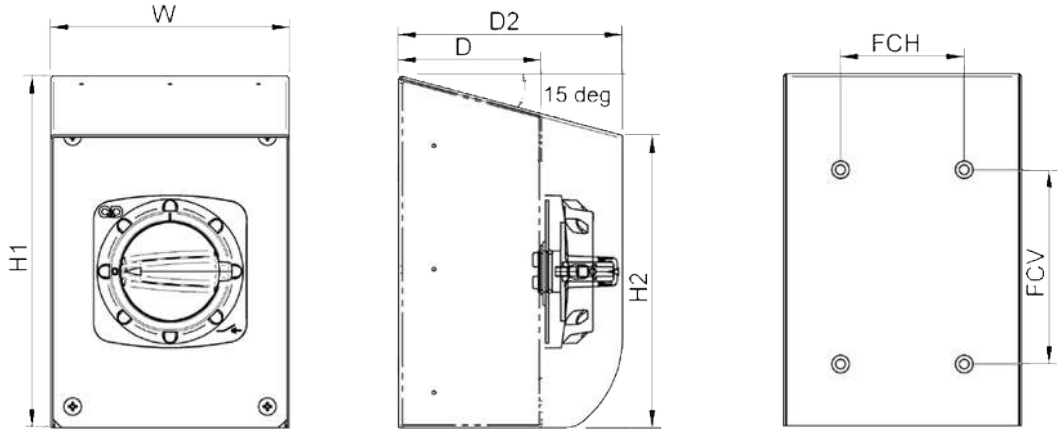

Encl. Size	Overall Dims.					Internal Fixings		
	H1	H2	W	D	D2	FCH	FCV	Ø
Size A	200	165	135	80	127	70	110	5.5
Size B	240	200	185	100	147	90	130	5.5

Flush Mounting Switchgear

Size A

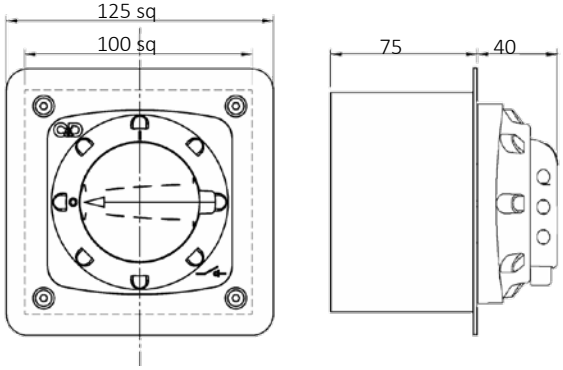

Size B (* = 75) / Size C (* = 100)

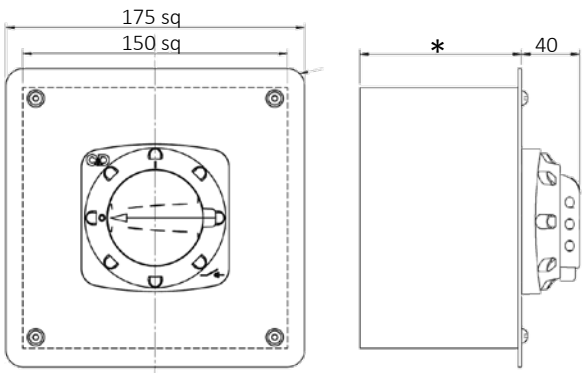

Dimensions- Sheet Steel

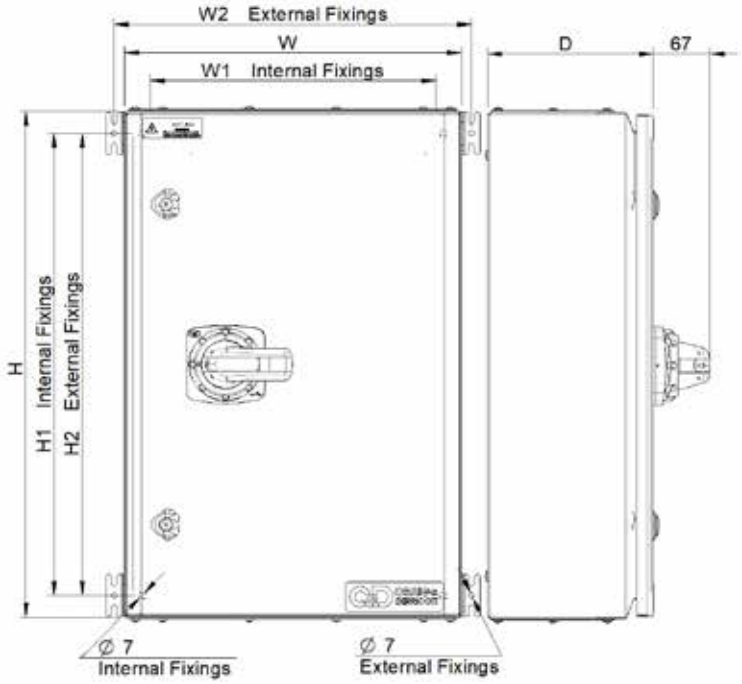

Encl. Size	H	W	D	H1	H2	W1	W2
1	300	300	150	248	248	258	324
2	300	300	200	248	248	258	324
3	400	300	150	348	348	258	324
4	400	300	200	348	348	258	324
5	400	400	200	348	348	358	424
6	500	400	200	448	448	358	424
7	600	400	200	548	548	358	424
8	600	400	300	548	548	358	424
9	600	500	200	548	548	458	524
10	700	500	300	648	648	458	524
11	800	600	200	748	748	558	624
12	800	600	300	748	748	558	624
13	1000	600	300	948	948	558	624
14	1000	800	300	948	948	758	824

Dimensions- Glass Fibre Reinforced Polycarbonate

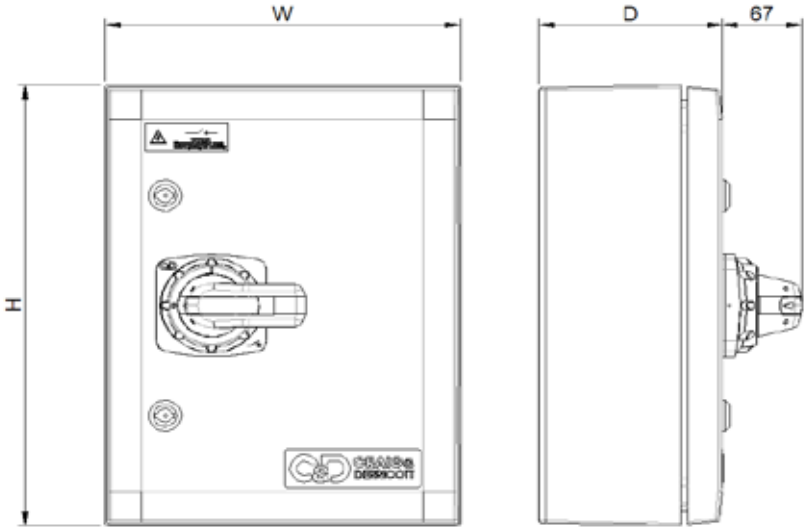

Encl. Size	H	W	D
1	400	300	150
2	400	300	210
3	500	400	210
4	600	400	210
5	700	500	300
6	800	600	300
7	1035	835	300

Dimensions- Flagged

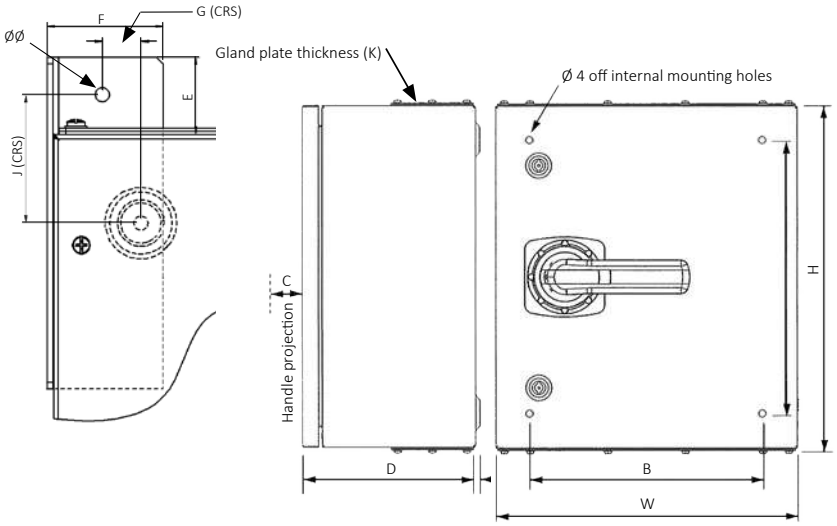

Encl. Size	1F	2F	3F	4F	5F
H	250	400	500	600	750
W	350	350	400	450	450
D	163	163	163	220	220
A	170	320	420	520	670
B	270	270	320	370	370
C	67	67	67	67	67
K	1.5	1.5	1.5	2	2
Ø	6.5	6.5	6.5	6.5	6.5
E	35	35	35	35	35
F	53	58	58	58	52
G	18	18	13	13	13
J	58	58	58	58	58
Ø Ø	6.5	6.5	8.5	8.5	8.5

EXPLOSION PROOF SWITCHGEAR

Craig & Derricott has been associated with the design and manufacture of Ex products for more than 30 years. The current product range has been developed to meet the technical requirements of today's market and a great deal of the design consideration has been given to bringing a quality product to the market at a competitive price.



Explosion Proof - Zone 22

Craig & Derricott has been manufacturing enclosed switchgear for more than 70 years. Using high quality die cast aluminium and hinged door sheet steel enclosures the range covers 20A- 63A ratings. Other ratings are available on request.

All items allow for the fitting of up to three padlocks in the 'Off' position. Units are inclusive of fixings outside of the enclosure seal area and an external earth point.

Explosion Proof - Zone 22- How it works.

From July 2006 the onus was placed upon companies to ensure that all equipment within their organisations is suitable for the environment in which it is being used. This was aimed particularly at areas where there may be a possibility of a combustible atmosphere being present, even for short periods i.e. Less than 10 hours/year.

People normally think of such atmospheres as being gases, mists or vapours, however there are various industries where a conductive or non-conductive dust mixed with air in the right proportion can become explosive. It is these areas where the Craig & Derricott ATEX Group II (Zone 22) equipment can be used to help you comply with Health & Safety regulations.

Typical industries where such atmospheres may be generated:-

- Grain Mills
- Cargo Handling
- Powder Coating Plant
- Woodworking
- Textiles
- Pharmaceuticals
- Chemicals
- Waste Processing

There are different degrees of protection against explosive dusts, and Zone 22 is defined as:-

"A place in which an explosive atmosphere, in the form of a cloud of combustible dust in air, is not likely to occur in normal operation but, if it does occur, will persist for a short period only."

Applicable Regulations / Specifications

- Directive 2014/34/EU ("Manufacturers Directive") Sets out the route equipment manufacturers must take to get their products certified for use in hazardous environments.
- Directive 1999/92/EC ("Users Directive") Defines the classifications for protection zones, and the approach users must take to ensure that the correct equipment is matched to specific hazardous environments.

Both of the above are classed as 'ATEX' directives and are concerned solely with ensuring safety in the workplace.

- DSEAR — Dangerous Substances and Explosive Atmospheres Regulations 2002.
- BS EN 60079-0 — Explosive atmospheres- Part 0: Equipment- General requirements.
- BS EN 60079-31 — Explosive atmospheres- Part 31: Equipment dust ignition protection by enclosure "t".
- BS EN 60529 — Specification for degrees of protection provided by enclosures. (IP code)
- BS EN 60947-3 — Specification for low-voltage switchgear and control gear.
- BS EN 60204-1 — Safety of machinery. Electrical equipment of machines- General requirements.

Image	Rating	Format	Cat. No.	Encl. Size	Encl. Material	IP Rating	Supplied Bottom Entries
	20A	6P+2/EB	SDDG206EBZ22	A22	Die-Cast Aluminium	IP65	1 x M20 top + 2 x M20 bottom
	25A	3P+2/EB	SDDG253EBZ22	A22	Die-Cast Aluminium	IP65	1 x M20 top + 2 x M20 bottom
	32A	3P+2/EB	SDDG323EBZ22	A22	Die-Cast Aluminium	IP65	1 x M20 top + 2 x M20 bottom
		6P+2/EB	SDDG326EBZ22	B22			2 x M25 + 1 x M20 bottom
	40A	3P+2/EB	SDDG403EBZ22	B22	Die-Cast Aluminium	IP65	2 x M25 + 1 x M20 bottom
		6P+2/EB	SDDG406EBZ22				
	63A	3P+2/EB	SDDG633EBZ22	B22	Die-Cast Aluminium	IP65	2 x M25 + 1 x M20 bottom
		3P+2/EB	SDMG633EBZ22	C22	Sheet Steel		N/A
		6P+2/EB	SDMG636EBZ22	D22			

Certification and Approvals

Die cast Aluminium / Sheet Steel

- Certification Code — II 3D; tc IIIB T85°C Dc
- Certification standard — BS EN 60079-0, BS EN 60079-31, BS EN 60529, BS EN 60947-3, BS EN 60204-1

Technical Specification - Zone 22

For products on pages 44 to 46. Data supplied against tests to IEC/BS EN 60947-3

Zone 22									
Application	Sym.	Unit	Category	20A	25A	32A	40A	40A	63A
Format	-	-	-	6P	3P	3P+6P	3P	6P	3P+6P
Rated thermal current	I_{the}	A	-	20	25	32	40	40	63
Rated insulation voltage	U_i	V	-	690	690	690	690	690	690
Rated impulse voltage	U_{imp}	kV	-	6.0	6.0	6.0	6.0	6.0	6.0
Rated operational power (3 phase AC)	-	kW	380/440V- AC23	7.5	11	15	15	15	25
			500V- AC23	7.5	15	15	15	15	30
			690V- AC23	7.5	15	15	15	15	30
Rated short time withstand current (1 sec)	I_{cw}	A	-	250	500	600	600	600	1300
Max. fuse size for short circuit protection (gG Characteristic)	-	kA	10kA	20	35	35	40	40	80
			25kA	16	32	32	32	32	63
			50kA	-	32	32	32	32	63
Connecting capacity	-	-	Terminal type						
	-	mm^2	Flexible cable	2.5 x 2	6	6	6	6	16
	-	mm^2	Rigid cable	2.5 x 2	10	10	10	10	25
	-	Nm	Tightening torque	1.0	1.2	1.2	1.2	1.2	1.2

Zone 22 Dimensions

Enclosure A22

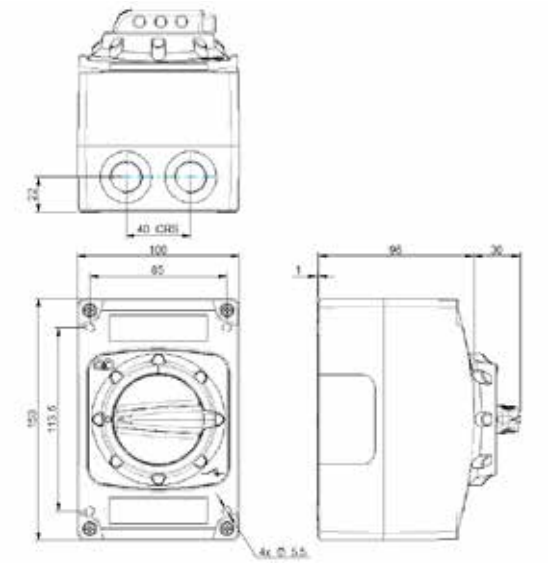

Enclosure B22

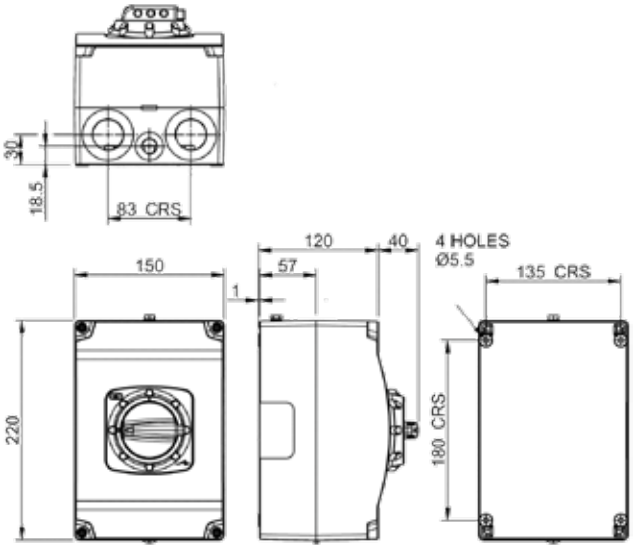

Enclosure C22 & D22

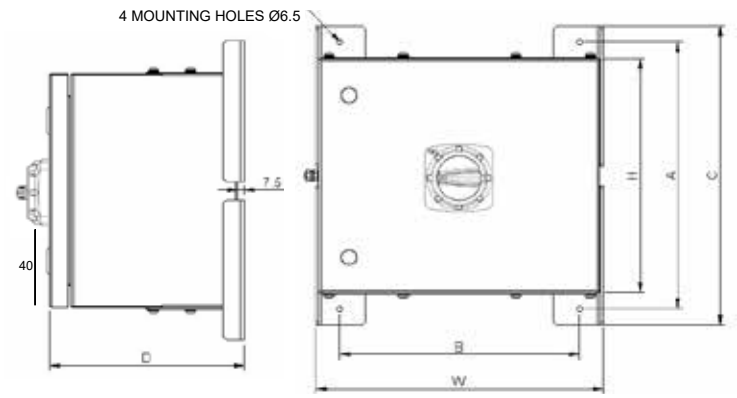

Encl.	H	W	D	A	B	C
C22	250	256	108	286	206	320
D22	250	306	208	286	256	320

Image	Description			Cat. No.
	Actuator Legend Contacts Dimensions Enclosure Material IP Rating	Emergency Stop twist-to-reset Emergency Stop Circular yellow 1N/C (EMSL Lid Mount) D11 Stainless Steel IP65	ND	EMSL/T/F/NC
	Actuator Legend Contacts Dimensions Enclosure Material IP Rating	Emergency Stop key reset (2 Keys) Emergency Stop Circular yellow 1N/C (EMSL Lid Mount) D11 Stainless Steel IP65	ND	EMSL/K/F/NC
	Actuator Legend Contacts Dimensions Enclosure Material IP Rating	Emergency Stop, twist-to-reset Emergency Stop circular yellow 1N/C + safety contact (EMSL Lid Mount) D10 Stainless Steel IP69K	ND	EMSL/T/SS/NC69
EMSL/T/SS/NC69 is sealed to withstand the forces associated with pressure washers. Tested to withstand a hose delivering water at a pressure between 80-100 bar at a temperature of 80°C. The combination of a stainless steel enclosure and sealing to IP69K make these items ideally suited to environments where strict hygiene cleaning routines are enforced. Supplied with external fixing feet for vertical or horizontal mounting.				
	Actuator Legend Contacts Dimensions Enclosure Material IP Rating	Emergency Stop Mushroom twist-to-reset Pattress box or trucking 2xN/C with 'faston' terminals (Monobloc-5A) D8 Sheet Steel IP65	ND	EMS/T/FS/NC
	Actuator Legend Contacts Dimensions Enclosure Material IP Rating	Emergency Stop Mushroom pull-to-reset Emergency Stop circular yellow 1N/C+1N/O (MT-16A) D5 Die-cast Aluminium IP65	HD	EMSH/P/MG/CO
	Actuator Legend Contacts Dimensions Enclosure Material IP Rating	Emergency Stop Mushroom pull-to-reset Emergency Stop circular yellow 1N/C+1N/O (MT-16A) D5 Die-cast Aluminium IP65	HD	EMSH/P/MR/CO
	Actuator Legend Contacts Dimensions Enclosure Material IP Rating	Emergency Stop Mushroom twist-to-reset Emergency Stop circular yellow 1N/C+1N/O (MT-16A) D5 Die-cast Aluminium IP65	HD	EMSH/T/MG/CO
	Actuator Legend Contacts Dimensions Enclosure Material IP Rating	Emergency Stop Mushroom key reset (2 Keys) Emergency Stop circular yellow 1N/C+1N/O (MT-16A) D5 Die-cast Aluminium IP65	HD	EMSH/K/MG/CO
	Actuator Legend Contacts Dimensions Enclosure Material IP Rating	Emergency Stop Mushroom key reset (2 Keys) Emergency Stop circular yellow 1N/C+1N/O (MT-16A) D5 Die-cast Aluminium IP65	HD	EMSH/K/MR/CO

Image	Description			Cat. No.
	Actuator Legend Guard Contacts Dimensions Enclosure Material IP Rating	Emergency Stop Mushroom pull-to-reset Emergency Stop printed flap cover Padlocking flap cover 1N/C+1N/O (MT-16A) D5 Die-cast Aluminium IP65	HD	EMSH/P/F1/MG/CO
	Actuator Legend Guard Contacts Dimensions Enclosure Material IP Rating	Emergency Stop Mushroom pull-to-reset Emergency Stop printed flap cover Padlocking flap cover 1N/C+1N/O (MT-16A) D5 Die-cast Aluminium IP65	HD	EMSH/P/F1/MR/CO
	Actuator Legend Contacts Dimensions Enclosure Material IP Rating	Emergency Stop Mushroom twist-to-reset Emergency Stop circular yellow 1N/C+1N/O (MT-16A) D4 Glass Filled Reinforced Polyester IP65	HD	EMSH/T/GP/CO
	Actuator Legend Contacts Dimensions Enclosure Material IP Rating	Emergency Stop Mushroom pull-to-reset Emergency Stop circular yellow 1N/C+1N/O (MT-16A) D4 Glass Filled Reinforced Polyester IP65	HD	EMSH/P/GP/CO
	Actuator Legend Contacts Dimensions Enclosure Material IP Rating	Emergency Stop Mushroom key reset (2 Keys) Emergency Stop circular yellow 1N/C+1N/O (MT-16A) D4 Glass Filled Reinforced Polyester IP65	HD	EMSH/K/GP/CO
	Actuator Legend Guard Contacts Dimensions Enclosure Material IP Rating	Emergency Stop Mushroom pull-to-reset Emergency Stop printed flap cover Padlocking flap cover 1N/C+1N/O (MT-16A) D4 Glass Filled Reinforced Polyester IP65	HD	EMSH/P/F1/GP/CO
	Actuator Legend Contacts Dimensions Enclosure Material IP Rating	Emergency Stop Mushroom twist-to-reset Emergency Stop circular yellow 1N/C+1N/O (MT-16A) D11 Stainless Steel IP65*	HD	EMSH/T/F/CO
	Actuator Legend Contacts Dimensions Enclosure Material IP Rating	Emergency Stop Mushroom pull-to-reset Emergency Stop circular yellow 1N/C+1N/O (MT-16A) D11 Stainless Steel IP65*	HD	EMSH/P/F/CO
	Actuator Legend Contacts Dimensions Enclosure Material IP Rating	Emergency Stop Mushroom key reset (2 Keys) Emergency Stop circular yellow 1N/C+1N/O (MT-16A) D11 Stainless Steel IP65*	HD	EMSH/K/F/CO
	Actuator Legend Guard Contacts Dimensions Enclosure Material IP Rating	Emergency Stop Mushroom pull-to-reset Padlocking flap cover Emergency Stop pad printed flap cover 1N/C+1N/O (MT-16A) D11 Stainless Steel IP65*	HD	EMSH/P/F1/F/CO

*As supplied there is an IP65 seal between the Pushbutton and the face plate. To maintain this seal when installing the complete assembly the onus is upon the installer to use a continuous bead of flexible sealant to provide an effective seal between the rear of the face plate and what may be an uneven mounting surface.

Technical Data Page 67 | Dimensions Page 68

General Description

'Emergency Stops' are often situated adjacent to the associated 'Start' button. In these assemblies the two functions are combined in a single enclosure.

All of the stayput 'Emergency Stop' buttons meet the latest safety requirements.

The flap cover option operates the stayput actuator when the cover is pressed. Padlocks can be inserted to prevent an unauthorised reset. Enclosures in polycarbonate and die-cast aluminium provide a choice dependent upon the environment.

Image	Description			Cat. No.
	Actuator Legend Contacts Dimensions Enclosure Material IP Rating	a/ Start, momentary b/ Emergency Stop, twist-to-reset a/ I b/ Emergency Stop Circular yellow 1N/C+1N/O (EMSL Lid Mount) D7 Die-cast Aluminium IP65	ND	ESSL/GS/T/MG/NOC
	Actuator Legend Contacts Dimensions Enclosure Material IP Rating	a/ Start, momentary b/ Emergency Stop, twist-to-reset a/ I b/ Emergency Stop Circular yellow 1N/C+1N/O (EMSL Lid Mount) D3 Moulded Plastic IP65	ND	ESSL/GS/T/P/NOC
	Actuator Legend Guard Contacts Dimensions Enclosure Material IP Rating	a/ Start, momentary b/ Emergency Stop, pull-to-reset a/ Start b/ Emergency Stop Printed flap cover Padlocking flap cover 1N/C+1N/O (MT-16A) D7 Die-cast Aluminium IP65	HD	SSTH/GS/P/F1/MG/CO
	Actuator Legend Contacts Dimensions Enclosure Material IP Rating	a/ Start, momentary b/ Emergency Stop, mushroom pull-to-reset a/ Start b/ Emergency Stop Circular yellow 1N/C+1N/O (MT-16A) D7 Die-cast Aluminium IP65	HD	ESSH/GS/P/MG/CO

Image	Description			Cat. No.
	Actuator Legend Guard Contacts Dimensions Enclosure Material IP Rating EX	a/ Start, momentary b/ Emergency stop, pull-to-reset a/ Start b/ Emergency Stop Printed flap cover Padlocking flap cover Start- 1N/O (MT-16A) Stop- 1N/C (MT-16A) D7 Die-cast Aluminium IP65 Zone 22	HD	SSTH/GS/P/F1/MG/COZ
	Actuator Legend Guard Contacts Dimensions Enclosure Material IP Rating EX	Emergency stop, pull-to-reset Emergency Stop Printed flap cover Padlocking flap cover 1N/C+1N/O (MT-16A) D5 Die-cast Aluminium IP65 Zone 22	HD	EMSH/P/F1/MG/COZ
	Actuator Legend Contacts Dimensions Enclosure Material IP Rating EX	Mushroom, key reset (2 Keys) Emergency Stop circular yellow 1N/C+1N/O (MT-16A) D5 Die-cast Aluminium IP65 Zone 22	HD	EMSH/K/MG/COZ

Accessories

Contact blocks are available to replace or extend the arrangements supplied as standard.

MT Series

A 'clip-in' module which can be supplied in N/O, N/C & safety formats. The clip-in housing allows for a total of three blocks per actuator.

Image	Description	Cat. No.
	Normally Closed (N/C) contact block. Momentary action. 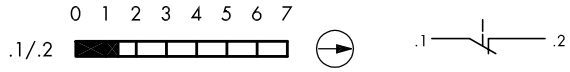	MTO
	'Safety Contact' for Emergency Stops. 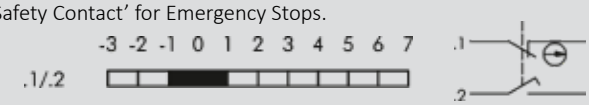	MTOSFE
	Normally Open (N/O) contact block. Momentary action. 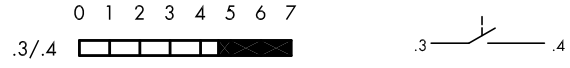	MTI

ETR Series

The 'ETR' block provides N/O + N/C contacts in one assembly.

Image	Description	
	Contact Block, Momentary Action 1 N/O + 1 N/C 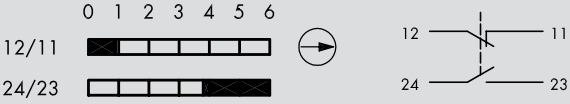	ETR

S1 Series

The S1 contact block is designed to be stacked in pairs side-by-side and then back-to-back making a total of four changeover blocks on one Heavy Duty actuator. Three or four blocks will require extended fixing screws (U42)

Image	Description	Cat. No.
	Contact Block, Momentary Action C/O 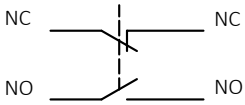	S1
	Assembly screw kit to enable 3 or 4 'S1' contacts to be mounted on a single Heavy Duty actuator.	U42

General Description

'Start/Stop' control stations are the most convenient way of providing simple local control for a variety of applications. When inserted into a control scheme they provide the local interface with which machinery can be easily be controlled.

The assembled stations are offered in various enclosure materials which are designed to match applications in terms of mechanical protection.

Image	Description			Cat. No.
	Actuator Legend Contacts Dimensions Enclosure Material IP Rating	Full guard, momentary start / stop O & I I - 1N/O (EMSL Lid Mount) O - 1N/C (EMSL Lid Mount) D2 PC IP65	ND	SSTL/GS/RS/P/NOC
	Actuator Legend Contacts Dimensions Enclosure Material IP Rating	Full guard, momentary start / stop O & I I - 1N/O (EMSL Lid Mount) O - 1N/C (EMSL Lid Mount) D5 Die-cast Aluminium IP65	ND	SSTL/GS/RS/MG/NOC
	Actuator Legend Contacts Dimensions Enclosure Material IP Rating	Full guard, momentary start O & I I - 1N/O (EMSL Lid Mount) O- 1N/C (EMSL Lid Mount) D9 Stainless Steel IP65	ND	SSTL/GS/RS/SS/NOC
	Actuator Legend Guard Contacts Dimensions Enclosure Material IP Rating	a/ Full guard, momentary b/ Mushroom, pull-to-reset a/ Start b/ Stop printed flap cover Flap cover non-locking Start- 1N/O (MT-16A) Stop- 1N/C (MT-16A) D7 Die-cast Aluminium IP65	HD	SSTH/GS/P/F3/MG/CO
	Actuator Legend Contacts Dimensions Enclosure Material IP Rating	Full guard, momentary start Start & Stop Start- 1N/O (MT-16A) Stop- 1N/C (MT-16A) D7 Die-cast Aluminium IP65	HD	SSTH/GS/RS/MG/CO
	Actuator Legend Guard Contacts Dimensions Enclosure Material IP Rating	a/ Full guard, momentary b/ Mushroom, key reset (2 Keys) a/ Start b/ Stop printed flap cover Flap cover non-locking Start- 1N/O (MT-16A) Stop- 1N/C (MT-16A) D7 Die-cast Aluminium IP65	HD	SSTH/GS/K/F3/MG/CO

Accessories

Contact blocks are available to replace or extend the arrangements supplied as standard.

Monobloc Series

The Monobloc assembly is designed for use in very restricted space. The contacts are assembled in the base of the actuator and cannot be supplied separately. To replace the contacts will require a new complete actuator.

Image	Description	
	Contact Block, Momentary Action 2 N/C 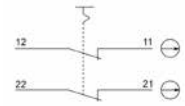	FRVKOO

EMSL Series

A 'clip-in' module which can be supplied in N/O and N/C format. Each contact block has screw termination and designed for Direct snap-on mounting to control station base. Maximum tightening torque for screw terminals: 1Nm.

Image	Description		Cat. No.
	Base mounted normally closed contact block • Screw termination • Direct snap-on mounting to control station base • Maximum tightening torque for screw terminals: 1Nm	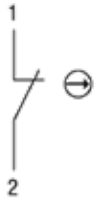	EMSL/NC
	Base mounted normally open contact block • Screw termination • Direct snap-on mounting to control station base • Maximum tightening torque for screw terminals: 1Nm		EMSL/NO

Image	Description		Cat. No.
	Lid mounted normally closed contact block • Screw termination • Direct snap-on mounting to control station actuator • Maximum tightening torque for screw terminals: 1Nm	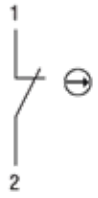	CB1NC
	Lid mounted normally open contact block • Screw termination • Direct snap-on mounting to control station actuator • Maximum tightening torque for screw terminals: 1Nm		CB1NO

Image	Description		Cat. No.
	Lid mounted normally closed safety contact block available for Emergency Stop control stations. When inserted the Red plunger will be operated by the pushbutton actuator, the green plunger will retain a N/C contact when the block is pushed fully home and clicked in-place. Should for any reason the block become loose, the contact under the green plunger will open and initiate a stop function. • Screw termination • Direct snap-on mounting to control station actuator • Maximum tightening torque for screw terminals: 1Nm	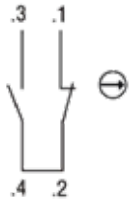	CB01NCSM

Technical Specification - Control Stations

Data supplied against tests to BS EN 60947-5-1

Series	Current	Utilisation Category	Rated Insulation Voltage (U_i)	Rated Operational Voltage (U_e) / Current (I_e)										Breaking Capacity	Continuous thermal current (I_{th})
MT	a.c.	AC15 A600	600V	V	-	-	-	-	250	440	-	-	-	10Ie	16A
				A	-	-	-	-	3	1.6	-	-	-		
	d.c	DC13 Q600	600V	V		24	60	125	250	440				1.1Ie	16A
				A		2	1	0.4	0.2	0.12					
ET	a.c.	AC15	400V	V	-	-	-	-	250	400	-	-	-	10Ie	10A
				A	-	-	-	-	5	3	-	-	-		
	d.c	DC13	400V	V	-	24	60	125	250	400	-	-	-	1.1Ie	10A
				A	-	2	1	0.4	0.2	0.12	-	-	-		
Mono bloc	a.c.	AC15 B300	250V	V	-	-	-	120	240	-	-	-	-	-	10A
				A	-	-	-	5	5	-	-	-	-		
S1	a.c.	AC15	660V	V	-	-	-	-	-	400	-	-	-	-	10A
				A	-	-	-	-	-	5	-	-	-		
EMSL	a.c	AC15	690V	V	12	24	48	120	240	400	480	500	600	10Ie	10A
				A	6	6	6	6	6	3	1.5	1.4	1.2		
	d.c	DC13	690V	V	12	24	48	125	250	440	-	500	600	1.1Ie	10A
				A	3	3	1.5	0.55	0.27	0.15	-	0.13	0.1		

Control Stations

Dims as shown are for the enclosures only used in the various assemblies. Projections will vary depending upon the actuators incorporated in the design.

Normal Duty Actuators (ND)	Emergency Stop (incl. guards)	42mm
	Start/Stop	11mm
Heavy Duty Actuators (HD)	Mushroom (Twist or pull to reset)	43mm
	Mushroom (Key reset)	51mm
	Full guard (Start/Stop)	30mm
	Flap Cover	66mm

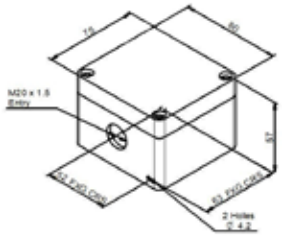

Enclosure D0
Material Die-Cast Aluminium
Colour Grey (RAL 7001)
Entries 1 x M20
Fixings 2 x M4

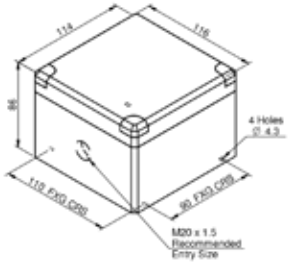

Enclosure D2
Material Polycarbonate
Colour Grey (RAL 7035)
Entries Plain sides
Fixings 2 x M4

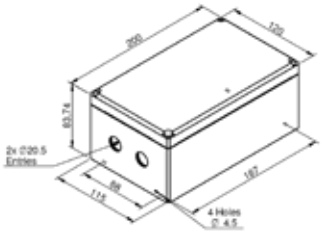

Enclosure D3
Material Polycarbonate
Colour Grey (RAL 7035)
Entries Plain sides
Fixings 4 x M4

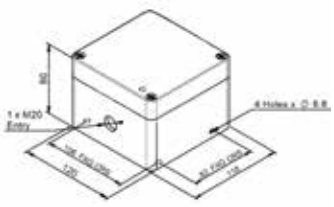

Enclosure D4
Material Glass reinforced Polyester
Colour Grey (RAL 7001)
Entries 1 x M20
Fixings 4 x M5

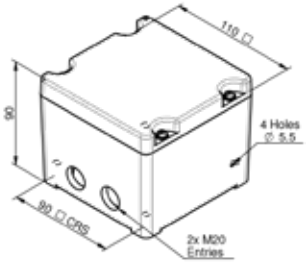

Enclosure D5
Material Die-Cast Aluminium
Colour Grey (RAL 7035)
Red (RAL 3020)
Entries 2 x M20
Fixings 4 x M5

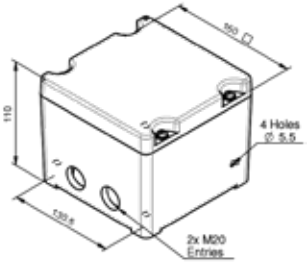

Enclosure D6
Material Die-Cast Aluminium
Colour Grey (RAL 7035)
Entries 2 x M20
Fixings 4 x M5

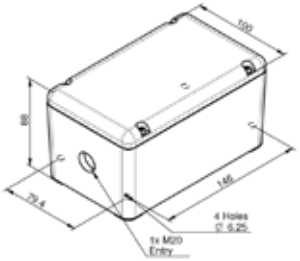

Enclosure D7
Material Die-Cast Aluminium
Colour Grey (RAL 7035)
Entries 1 x M20
Fixings 4 x M5

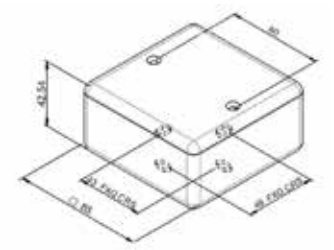

Enclosure D8
Material Steel
Colour Silver
Entries 5 x M20 knockouts
Fixings 4 off 5 x 10 slots

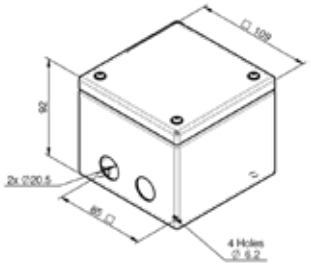

Enclosure D9
Material Stainless Steel (Grade 304)
Colour Brushed
Entries 2 x M20
Fixings 4 x M6

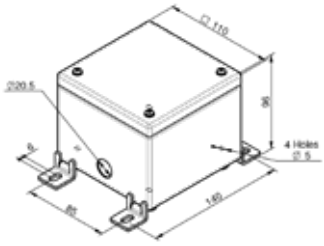

Enclosure D10
Material Stainless Steel (Grade 304)
Colour Brushed
Entries 1 x M20
Fixings 4 x M6

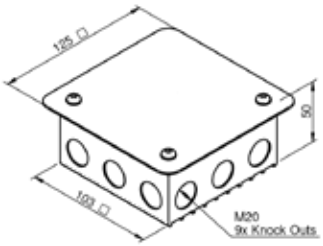

Enclosure D11
Material Fascia Plate - Stainless Steel
Back Box - Galvanised Steel
Colour Fascia Plate - Brushed
Entries 9 x M20 knockouts
Fixings 4 x M5

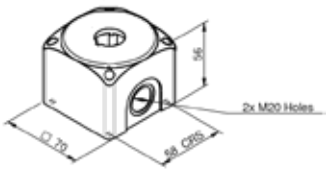

Enclosure D12
Material Polycarbonate
Colour Yellow/Black
Entries 2 x M20/M25/ PG13.5/PG16
2 x M16/PG11
Fixings 4xM4

MOTOR CONTROLS

The motor control range provides the user with a product that is robust and cost effective. Housed in weatherproof sheet steel enclosures, these assemblies can be placed in most industrial environments.

Manufactured to British standards BS EN 60947-Pt4-Sec 1. BS EN 60529-1992 and to IEC 947-4-1. All starters give degree of protection IP55 and are suitable for use up to an altitude of 2000 meters above sea level and for operation in ambient temperatures of-5° C to +40° C.

The Direct-On-Line and Star Delta Starters are available with or without integral triple pole isolator. The rotary mains isolator switch comes standard with a door interlocking red / yellow handle, pad-lockable in the “Off” position.



Enclosed Starters

Craig & Derricott range of enclosed starters consist of Direct Online (DOL) Starters, Reversing Direct Online Starters and Star Delta Starters. All three products ranges are supplied in surface mounting IP55 sheet steel enclosures with an epoxy powder coated paint finish in RAL 7035- Light Grey.



Direct Online Starters and Star Delta Starters are both provided with built-in Start / Stop Reset push buttons and are available with or without integral triple pole isolator. The rotary mains isolator switch comes standard with a door interlocking red / yellow handle, pad-lockable in the "Off" position. Reversing Direct Online Starters are provided with built-in Forward / Stop Reset / Reverse push buttons.

Overloads are supplied separately for each range. Manual reset thermal overloads available up to 43A and suitable for all of the enclosed starter range. Other sizes and features are available in our collection of Motor Controls.

Contact your local Area Sales Manager for more information.

Speed Controls

Craig & Derricott offer a range of range of 0.25kW to 22kW, single or three phase, enclosed internally mounted energy saving Speed Control inverter panels supplied ready to run.



Supplied with the latest Emotron VS inverters, this range of Speed Controls are provided in compact IP54 enclosures with ventilation fans & filters. Integral EMC filter & keypad/display are fitted as standard with built in short circuit, overload, voltage imbalance & earth fault detection. The internally mounted energy saving potentiometer and simple Start & Stop external Push buttons make it an easy product to use.

1. Pre-engineered enclosures & simple controls
2. Pre-programmed soft start and stop ramps
3. Set the speed and press start

REDUCE THE SPEED AND SAVE MONEY

Approximate Saving
10% slower = 25% saving
20% slower = 45% saving
30% slower = 65% saving

Other sizes and features are available in our collection of Motor Controls.

Contact your local Area Sales Manager for more information.

ENCLOSED SAFETY SWITCHES

Enclosed safety (grabwire) switches are the equipment of choice to provide safety protection over long distances. Prior to the development of Grabwire switches, machinery such as conveyors had to be fitted with a number of separate Emergency Stops. Positioning the 'Stops' such that at least one could be reached from any point, was often difficult to fulfil.

Conveyors are the obvious application for such devices, but with the ability to take the protection wire around bends, and provide safety cover over both horizontal and vertical runs, the system lends itself to many different applications.

Reference standards:-
BS EN ISO 12100-1:2003 Pts. 1 & 2 | BS EN 418 | BS EN 60947-5-1 | BS EN 60529 | BS EN 60947-5-5 | BS EN 60204-1 | PD 5304.



GW Range

The 'GW' range, is a tensioned wire system which is designed to cover small to medium sized runs. (Up to 100m max. between pairs). A Grabwire switch assembly gives a continuous and uninterrupted safety provision over long distances.

Prior to the development of Grabwire switches, machinery such as conveyors had to be fitted with a number of separate Emergency Stops. Positioning the 'Stops' such that at least one could be reached from any point, was often difficult to fulfil. Conveyors are the obvious application for such devices, but with the ability to take the protection wire around bends, and provide safety cover over both horizontal and vertical runs, the system lends itself to many different applications.

The minimum requirements in this situation would be a Grabwire Switch at one end and an Anchor Box at the other.

The effective installation involves the fitting of Grabwire switches at both ends of the 'pull wire'. However, this does involve electrical cabling up to, and between, the switching units. The use of a non electrical 'Anchor Box' at one end removes the need to cable between the end assemblies.

The 'Anchor Box' effectively houses a long spring, which is compressed when the 'pull wire' is activated. At a fixed point during the compression, a latch is operated which locks the spring in the compressed or shortened state. When the 'pull wire' is released, it will be in a 'slack' condition, and the switching unit at the other end of the 'pull wire' senses the 'slack' condition and activates the 'Stop' signal. Although the 'Anchor Box' contains no electrical contacts, the latch needs manual resetting to restore the system.

Apart from the Grabwire switch, the only other item required in a simple set-up, is the connection kit. In the kit you will find all the parts necessary to install the system.

Universal Grabwire Switch + Connection Kit + Universal Grabwire Switch or Anchor Box

Image				
Cat. No.	GWN1	GWN2	GWN2/SS	GWDE
Description	Universal single ended	Universal single ended	Universal single ended	Universal double ended
Max. span between pairs (L) (or between switch & anchor box)	50m	100m	100m	2 x 100m
Encl. Material	Die-cast Aluminium (LM24)	Die-cast Aluminium (LM24)	Stainless Steel 1.6 mm Grade 316	Sheet Steel 1.6 mm
Finish	Textured Powder Coat RAL 3020	Textured Powder Coat RAL 3020	Polished	Textured Powder Coat RAL 3020
Ingress Protection	IP65	IP65	IP65	IP65
Rope Tensioner	Included	Included	Included	Included
Earthing	M4 Internal & External	M5 Internal & External	M5 Internal & External	M5 Internal & External
Electrical Contacts	2 N/C (Safety) + 1 N/O	2 N/C (Safety) + 2 N/O	2 N/C (Safety) + 2 N/O	2 x {2 N/C (Safety) + 2 N/O}
Electrical Rating:- Ith / Ui	10A/415V	10A/415V	16A/600V	16A/600V
AC21/22/23A to BS EN 60947-3	-	-	16A at 415V	16A at 415V
AC15 to BS EN 60947-5-1	5A at 415V	5A at 415V	5A at 415V	5A at 415V
Optional Indicator Lamp	✓	✓	-	-
Setting-up indicator	✓	✓	✓	✓
Hand reset knob	✓	✓	✓	✓
Universal (LH or RH) mounting	✓	✓	✓	✓

Image	Description	Cat. No.
	Each connection kit includes:- • Multi strand steel catenary cable with red PVC covering* • Stainless steel eyebolt supports. Sufficient to support the cable at 2M intervals. Supplied complete with two fixing nuts* • 2 x Stainless steel thimbles • 2 x Stainless steel 'D' shackles • 2 x Stainless steel clamps	Basic - GK00* Up to 5m - GK5 Up to 10m - GK10 Up to 20m - GK20 Up to 50m - GK50 Up to 75m - GK75 Up to 100m - GK100

Dimensions Page 78

Minimum Installation Requirements

When planning a grabwire installation, it is vital that the operators safety is always the primary objective. Plan the route of the 'pull wire' carefully to ensure maximum accessibility by the possible users. Ensure that supports can be placed at a maximum of 2m spacing. The placement of the grabwire switches need to be in reachable positions for setting-up, monitoring and resetting after an incident.

It is necessary to place the first eyebolt close to the switching body to ensure that if the wire is pulled at a very oblique angle, then the pull on the switch remains linear. Although corners/bends can be incorporated in the run, try to avoid too many. It may be necessary to install additional systems to ensure an effective installation. The ultimate objective must be to provide a free running 'pull wire' with the minimum of resistance to movement.

Measure each run and select a Grabwire switch whose max. span (L) is greater than the measured distance. If the total length is over 100m, then multiple installations will be necessary. If the length is excessive, then consider using the 'LW' system. Choose the Stainless Steel grabwire switch option if the working environment will be continuously wet or subject to systematic cleansing routines.

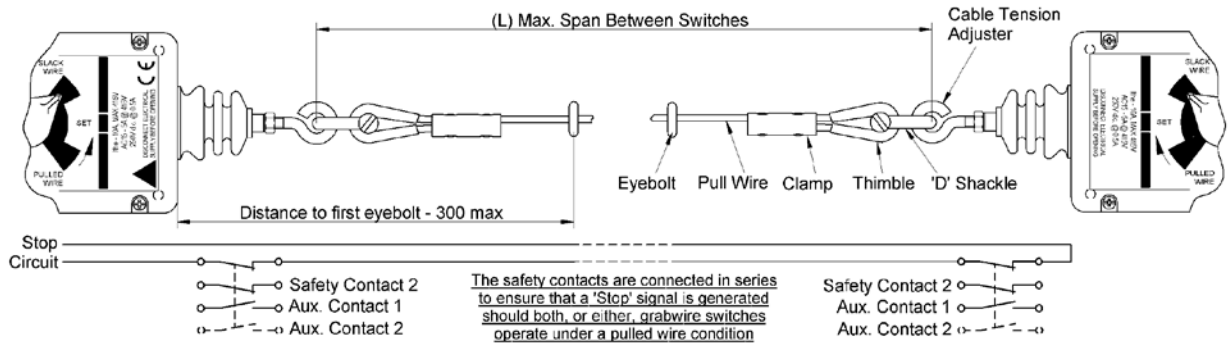

Accessories

To assist with the possible variations necessary when designing an installation, the following accessories are available.

Image	Description	Cat. No.
	Non Switching Anchor Box with manual reset	GW/AB
	Indicator lamp, which when powered through one of the spare N/O contacts, will indicate which grabwire switch has been actuated. (Indicates on 'Pulled' or 'Slack Wire' conditions) Supplied complete with bulb. Other colours and supply voltages available to order. 24V (Amber) Annunicator Lamp 110V (Amber) Annunicator Lamp	 GW024A GW110A
	Stranded steel 'pull wire' with red PVC covering. (Ø5 approx O/D) Sold per Metre. Pull Wire (As supplied in the connecting kits)	MR 0221
	Standard length 'eyebolt' for 'pull wire' support. Supplied complete with 2 x locking nuts. Material- Stainless steel, Size - M6, Overall length - 80, Thread length - 58 Standard M6 Eyebolt (As supplied in the connection kits)	 GWA 0070
	Extended length 'eyebolt' for 'pull wire' support. Supplied complete with 2 x locking nuts. Material - Stainless steel, Size - M6, Overall length - 230, Thread length - 200 Extended M6 Eyebolt	 GWC 0270
	Wrap around 'thimble' to terminate the 'pull wire'. Material - Stainless steel Termination 'thimble' (As supplied in the connection kits)	 GWC 0163
	'D Shackle' to connect the 'pull wire' to the grabwire switches. Material- Stainless steel Connection 'D Shackle' (As supplied in the connection kits)	 GWC 0166
	Cable clamp for securing the 'pull wire' back upon itself once passed around the 'thimble'. Tightening via 2 x Allen screws. Material - Stainless steel Cable clamp (As supplied in the connection kits)	 GWC 0167
	Allen key for tightening 'Cable Clamp' above. Size- 2.5 A/F Allen Key (As supplied in the connection kits)	 GWC 0189

Dimensions Page 78

GW Range

GWN1

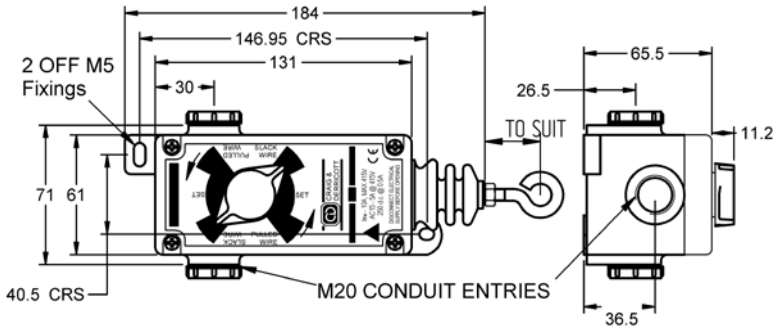

GWN2

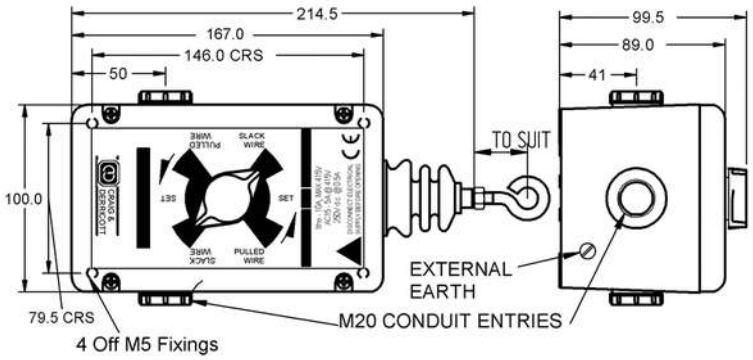

GWN2/SS

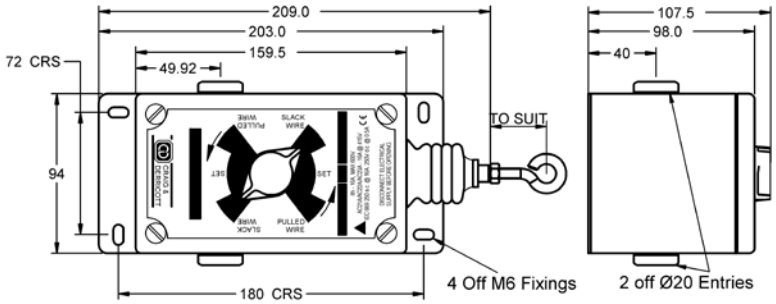

GW/AB Anchor Box

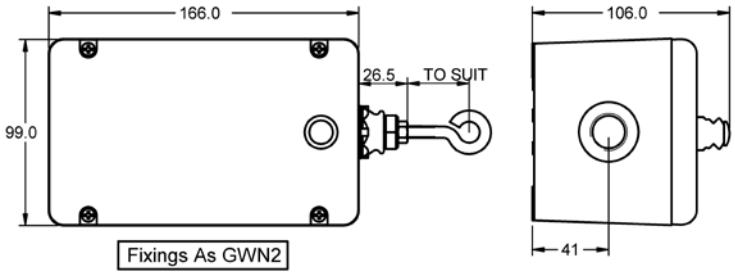

GWDE

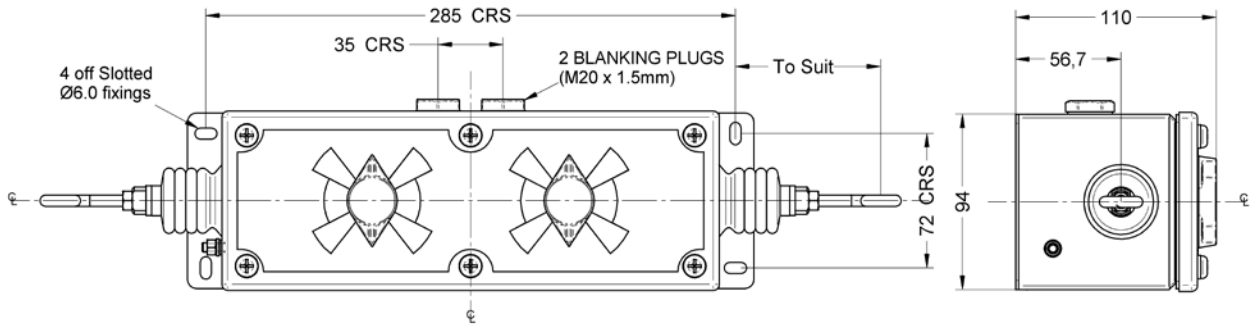

PANEL ISOLATORS

Craig & Derricott has a range of products designed specifically for control panel and switchboard construction. Most panels require a means of electrical isolation and the i-switch range can offer variants in the range of 25A- 1250A. All handle assemblies employ safety features with an override facility for testing or emergency situations. A choice of shaft lengths, auxiliary contacts & shields provide the flexibility to suit most applications.

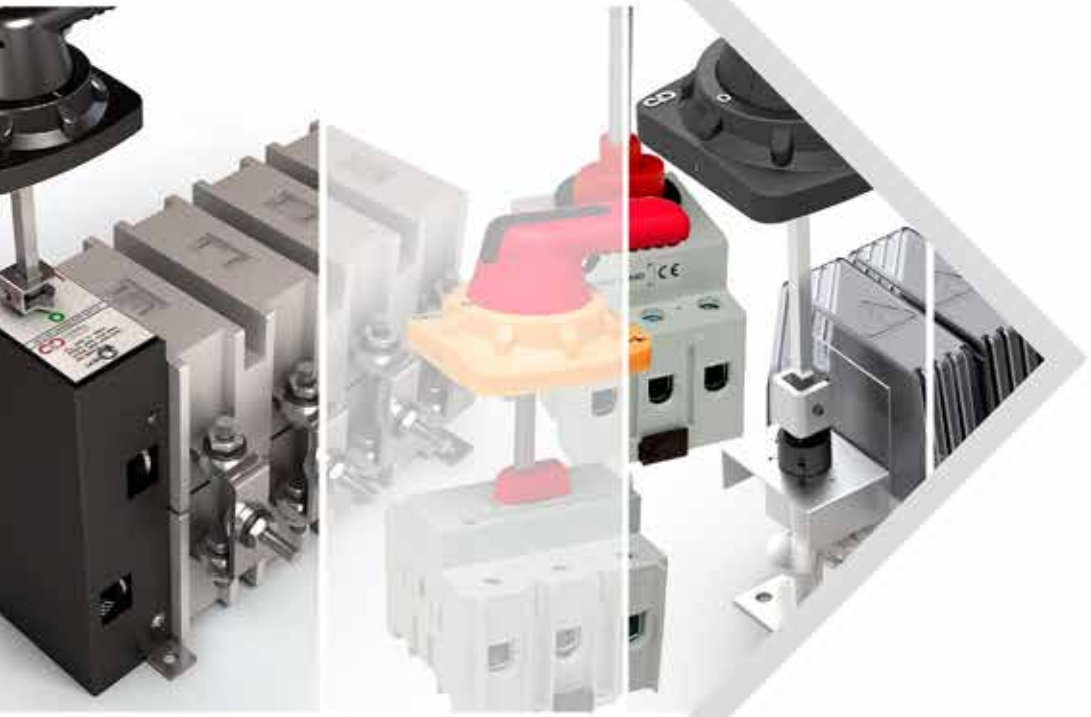

Compact Range

Craig & Derricott has ranges of compact control panel isolation equipment for panel mounting ranging from 25A to 200A. All come supplied with operating handle and a standard length shaft.

A compact range of Switch-Disconnectors with the capacity to add auxiliary and neutral block options to the basic load break switch block.

Features

- IP2X terminal protection.
- Door interlock handles with override facility
- DIN rail or base mounting.
- Add-on auxiliary/neutral blocks.

The Cat. No.s below include:

- On-load AC23A Switch-disconnector.
- 100mm standard length shaft assembly.
- IP65 minimum door interlock handle.
- Incoming terminal covers (A3 frame sizes only).

Image	Rating	Format	Cat. No.	Frame Size
	25A	3P	SD00253B	A0
		6P	SD00256B	A0-A0
	32A	3P	SD00323B	A0
	40A	3P	SD00403B	A0
		6P	SD00406B	A1-A1
	63A	3P	SD00633B	A1
		6P	SD00636B	A1-A1
	80A	3P	SD00803B	A1
	100A	3P	SDC01003B	A2
		6P	SDC01006B	A2-A2
	125A	3P	SDC01253B	A2
		6P	SDC01256B	A2-A2
	160A	3P	SDC01603B	A2
		6P	SDC01606B	A2-A2
	200A	3P	SDC02003B	A3

'B' = Black Handle. For Red Handle, replace B with R in the Cat. No. e.g. SD00253R

Accessories

All of the accessories listed below can be retrofitted. One block can be fitted either side of the main assembly on all of the 3 pole Switch-Disconnector interiors.

Image	Description	Cat. No.
	Auxiliary Contact- 2 Early Break	SAUX2EB
	Auxiliary Contact- 1 N/O + 1 N/C	SAUXCO
	25A- 40A Compact Neutral (Unswitched)	SNLC40
	63A Neutral (Unswitched)	SNL63
	80A Neutral (Unswitched)	SNL80
	100A Neutral (Unswitched)	SNL100
	125A Neutral (Unswitched)	SNL125
	160A Neutral (Unswitched)	SNL160
	200A Neutral (Unswitched)	SNL200
	25A Neutral (Switched)	SSP25
	40A Neutral (Switched)	SSP40
	63A Neutral (Switched)	SSP63
	80A Neutral (Switched)	SSP80
	100A Neutral (Switched)	SSP100
	125A Neutral (Switched)	SSP125
	160A Neutral (Switched)	SSP160
	200A Neutral (Switched)	SSP200

Extended Shafts

Both the standard 100mm shaft and the longer version as shown below can easily be adjusted to suit specific panel depths.

Shaft length	Frame size	Shaft (mm²)	Cat. No.
200mm	AO & A1	6	SSH2
200mm	A2 & A3	8	SSH17

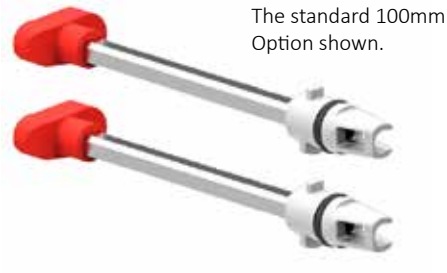

The standard 100mm Option shown.



Handle assembly supplied with the 'A0' & 'A1' frame Sizes (SDH1/BLK).



Handle assembly supplied with the 'A2' & 'A3' frame Sizes (SDH3/BLK).

Standard Range

A robust range of load break switches to ensure simple installation in applications such as power distribution boards. The compact design also suits OEM's and stand alone enclosure installations. A range of accessories extends the versatility.

Features:-

- On-load AC23A ratings.
- Four frame sizes covering 100A- 1250A.
- Direct lug connections onto plated Copper palms.
- Windows for contact inspection
- Supplied as either 3 or 4 pole versions.
- IP65 sealing door interlocking handles.
- Internal locking feature.

The Cat. No.s below include:-

- On-load AC23A Switch-disconnector.
- 200mm standard length shaft assembly.
- IP65 door interlock handle..

Image	Rating	Format	Cat. No.	Frame Size
	100A	3P	SD01003B	B1
		4P	SD01004B	
	125A	3P	SD01253B	B1
		4P	SD01254B	
	160A	3P	SD01603B	B1
		4P	SD01604B	
	200A	3P	SD02003B	B2
		4P	SD02004B	
	250A	3P	SD02503B	B2
		4P	SD02504B	
	400A	3P	SD04003B	B3
		4P	SD04004B	
	630A	3P	SD06303B	B3
		4P	SD06304B	
	800A	3P	SD08003B	B3
		4P	SD08004B	
	1000A	3P	SD10003B	B4
		4P	SD10004B	
	1250A	3P	SD12503B	B4
		4P	SD12504B	

'B' = Black Handle. For Red Handle, replace B with R in the Cat. No. e.g. SD01003R

Accessories

Add-on auxiliary contacts are available for the 100A- 1250A range and can be selected from the table below.

All auxiliary kits contain the necessary fixings and attachments to install the contact blocks which are supplied in 1 N/O + 1 N/C format. All N/O contacts are early break with respect to the main poles when switching from 'On' to 'Off'.

Image	Description	Cat. No.
	Auxiliary Contact for 100A - 160A	SAUXKITA
	Auxiliary Contact for 1000A - 1250A	SAUXKITD
	Auxiliary Contact for 200A - 250A	SAUXKITB
	Auxiliary Contact for 400A - 800A	SAUXKITC
	Spare Terminal Cover for 200A	STS1
	Spare Terminal Cover for 250A - 400A	STS2
	Set of 4 Terminal Covers for 630A	STS4
	Handle assembly for B1 frame size	SDH2/BLK
	Handle assembly for B2 frame size	SDH3/BLK
	Handle assembly for B3 frame size	SDH4/BLK
	Handle assembly for B4 frame size	SDH7/BLK

Alternative Shafts

As an alternative to the standard 200mm shaft a 400mm option is available as indicated below. The shafts are manufactured from square section steel and zinc plated. The height setting is adjusted by passing the shaft through a bush in the switch mechanism and locking it in position using a 'cup point' grub screw.

Rating	Shaft length	Cat. No.
100A - 160A	400mm	SSH13
200A - 250A	400mm	SSH14
400A - 1250A	400mm	SSH15

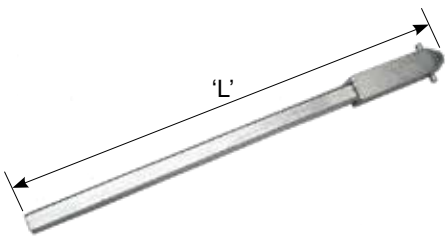

Technical Data Page 86 | Dimensions Page 88

Fuse Combination Range

A compact range of fuse combination units designed specifically for the panel builder market.

Features

- IP2X terminal protection.
- Suitable for std. IEC/BS EN 60269 (BS88) fuse links.
- Supplied as 3P&N or 3P&NL (Neutral Switched or Unswitched respectively).
- Add-on auxiliary/neutral blocks.

The Cat. No.s below include:-

- On-load AC23A fuse combination unit.
- 200mm standard length shaft assembly.
- IP65 door interlocking handle.

Image	Rating	Format	Cat. No.	Frame Size
	32A	3P+N	SDF00323NB	D1
		3P+NL	SDF00323NLB	
	63A	3P+N	SDF00633NB	D1
		3P+NL	SDF00633NLB	
	100A	3P+N	SDF01003NB	D2
		3P+NL	SDF01003NLB	
	125A	3P+N	SDF01253NB	D2
		3P+NL	SDF01253NLB	
	160A	3P+N	SDF01603NB	D3
		3P+NL	SDF01603NLB	
	200A	3P+N	SDF02003NB	D4
		3P+NL	SDF02003NLB	
	250A	3P+N	SDF02503NB	D4
		3P+NL	SDF02503NLB	
	315A	3P+N	SDF03153NB	D5
		3P+NL	SDF03153NLB	
	400A	3P+N	SDF04003NB	D5
		3P+NL	SDF04003NLB	
	630A	3P+N	SDF06303NB	D6
		3P+NL	SDF06303NLB	

'B' = Black Handle. For Red Handle, replace B with R in the Cat. No. e.g. SDF00253R

Accessories

Auxiliary blocks and fuse links are available for all Fuse Combination Units. Please select from the tables below. All auxiliaries are supplied as 1 N/O+1 N/C pair. All N/O auxiliary contacts are early break with respect to the main poles when switching from 'On' to 'Off'. Fuse links can be fitted to a lower rating to suit a particular load: please refer to the rating table below to maintain the correct size/tag format (A2, A4, B1 etc.)

Image	Description	Fuse Fixing CRS (mm)	Cat. No.
	Auxiliary Contact for 32A - 160A		SAUXKITA
	Auxiliary Contact for 630A		SAUXKITD
	Auxiliary Contact for 200A - 400A		SAUXKITC
	32A fuse link for BS fuse format A2 - A3	73 nom.	SFL32
	63A fuse link for BS fuse format A2 - A3	73 nom.	SFL63
	100A fuse link for BS fuse format A4	94 nom.	SFL100
	125A fuse link for BS fuse format A4	94 nom.	SFL125
	160A fuse link for BS fuse format B1 - B2	111 nom.	SFL160
	200A fuse link for BS fuse format B1 - B2	111 nom.	SFL200
	250A fuse link for BS fuse format B1 - B2	111 nom.	SFL250
	315A fuse link for BS fuse format B1 - B4	111 nom.	SFL315
	400A fuse link for BS fuse format B1 - B4	111 nom.	SFL400
	630A fuse link for BS fuse format C1 - C3	133 / 184 nom.	SFL630

Alternative Shafts

As an alternative to the standard 200mm shaft a 400mm option is available as indicated below. The shafts are manufactured from square section steel and zinc plated. The height setting is adjusted by passing the shaft through a bush in the switch mechanism and locking it in position using two 'cup point' grub screw.

Rating	Shaft length	Cat. No.
32A - 160A	400mm	SSH13
200A - 630A	400mm	SSH15

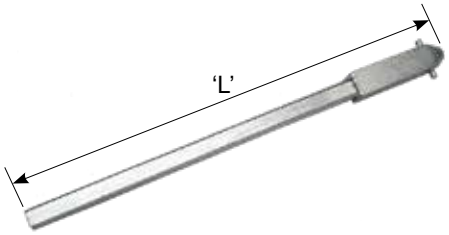

Changeover Range

A compact range of load break Changeover Switches suitable for a wide range of applications.

Features

- Compact 'piggy-back' design.
- On-load AC23A ratings.
- Supplied as four pole format.
- Windows for visual contact inspection.

The Cat. No.s below include:-

- On-load AC23A changeover four pole switch.
- 200mm standard length shaft assembly.
- IP65 door interlocking handle.

Image	Rating	Format	Cat. No.	Frame Size
	63A	4P	SCOD00634B	C1C
	100A	4P	SCOD01004B	C1C
	125A	4P	SCOD01254B	C2C
	160A	4P	SCOD01604B	C2C
	200A	4P	SCOD02004B	C2C
	250A	4P	SCOD02504B	C2
	400A	4P	SCOD04004B	C3
	630A	4P	SCOD06304B	C3

Alternative Shafts

As an alternative to the standard 200mm shaft a 400mm option is available as indicated below. The shafts are manufactured from square section steel and zinc plated. The height setting is adjusted by passing the shaft through a bush in the switch mechanism and locking it in position using a 'cup point' grub screw.

Rating	Shaft length	Cat. No.
63A- 100A	400mm	SSH14
125A- 200A	400mm	SSH18
250A- 630A	400mm	SSH15

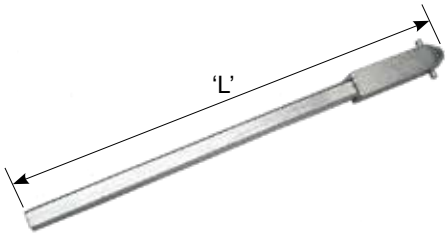

Supplied Handles

Designed to compliment the handles used on our enclosed equipment, the door interlocked versions are capable of being locked with up to three individual padlocks (Ø6.4 max shackle dia). All handles are sealed to IP65 which will enable installations in a wide variety of environmental conditions.

If the contacts should weld due to a fault or an excessive current situation, an override facility is provided for the use of a competent person which will allow the enclosure lid to be opened.



Handle assembly supplied with the 'C1C & C2C' frame size (PSA0515). Handle length 145mm.



Handle assembly supplied with the 'C2' & 'C3' frame size (SDH6/BLK). Handle length 220mm.

Technical Data Page 87 | Dimensions Page 90

Technical Specification - Panel Isolators

Data supplied against tests to BS EN 60947-3. *All AC21, AC22 & AC23 tests carried out at 415V.

Compact Range												
Application	Sym	Unit	Category	25	32	40	63	80	100	125	160	200
Rated thermal current	I_{th}	A		25	32	40	63	80	100	125	160	200
Rated insulation voltage	U_i	V		690	690	690	690	690	1000	1000	1000	1000
Rated impulse voltage	U_{imp}	kV		6	6	6	6	6	8	8	8	8
Rated operational current (AC)	I_e	A	400V- AC21A	25	32	40	63	80	100	125	160	200
			400V- AC22A	-	-	-	-	-	100	125	160	200
			400V- AC23A	21	29	29	48	56	100	112	128	128
Rated operational current (DC) (/poles in series)	I_e	A	Up to 48V- DC21A	25/1	32/1	40/1	63/1	80/1	-	-	-	-
			220V- DC21A	25/3	32/3	40/3	63/4	80/4	-	-	-	-
			Up to 48V- DC22A	-	-	-	-	-	-	-	-	-
			220V- DC22A	-	-	-	-	-	-	-	-	-
			Up to 48V- DC23A	-	-	-	-	-	-	-	-	-
			220V- DC23A	-	-	-	-	-	-	-	-	-
Rated operational power	P_e	kW	400/415V- AC23A	11	15	15	25	30	59	63	75	75
Short circuit making capacity	I_{cm}	kA	Peak value	1.2	1.4	1.4	2.9	3.0	3.7	4.0	5.0	5.0
Short circuit withstand (1sec)	I_{cw}	kA	rms value	0.5	0.6	0.6	1.3	1.4	2.6	2.8	3.0	3.0
Min. mechanical endurance		-	Operations	250 x 10^3	250 x 10^3	250 x 10^3	250 x 10^3	250 x 10^3	50 x 10^3	50 x 10^3	50 x 10^3	50 x 10^3
Min. electrical endurance		-	415V- at 0.65 pf	-	-	-	-	-	-	-	-	-
Connecting capacity		-	Terminal type									
		mm^2	Min/Max	2.5/6	2.5/10	2.5/10	2.5/25	2.5/25	10/70	10/70	10/70	-
		mm	Stud/Cu palm width	-	-	-	-	-	-	-	-	8/20
		Nm	Tightening torque	1.2	1.2	1.2	1.2	1.2	5	5	5	12

Standard Range												
Application	Sym	Unit	Category	100	125	160	200	250	400	630	800	1000	1250
Rated thermal current	I_{th}	A		115	125	160	200	270	500	630	720	1000	1250
Rated insulation voltage	U_i	V		750	750	750	1000	1000	1000	1000	1000	1000	1000
Rated impulse voltage	U_{imp}	kV		8	8	8	12	12	12	12	12	8	8
Rated operational current (AC)	I_e	A	400V- AC21A	100*	125*	160*	200*	250*	400*	630*	800*	1000*	1250*
			400V- AC22A	100*	125*	160*	200*	250*	400*	630*	800*	1000*	1250*
			400V- AC23A	100*	125*	135*	200*	250*	400*	630*	720*	-	-
Rated operational current (DC) (/poles in series)	I_e	A	Up to 48V- DC21A	100/2	125/2	160/2	200/2	250/2	400/2	630/1	800/1	1000/1	1250/1
			220V- DC21A	100/3	125/3	160/3	200/2	250/2	400/2	630/2	800/2	1000/3	1250/3
			Up to 48V- DC22A	100/2	125/2	160/2	200/2	250/2	400/1	630/1	800/1	-	-
			220V- DC22A	100/3	125/3	160/3	200/2	250/2	400/2	630/2	800/2	-	-
			Up to 48V- DC23A	100/2	125/2	160/2	200/2	250/2	400/1	630/1	800/1	-	-
			220V- DC23A	100/3	125/3	160/3	200/2	250/2	400/2	630/2	630/2	-	-
Rated operational power	P_e	kW	400/415V- AC23A	37	45	75	110	132	200	315	355	400	500
Short circuit making capacity	I_{cm}	kA	Peak value	7	7	7	35	35	65	80	80	105	105
Short circuit withstand (1sec)	I_{cw}	kA	rms value	5	5	5	8	8	17	17	17	50	50
Min. mechanical endurance		-	Operations	20 x 10^3	20 x 10^3	20 x 10^3	16 x 10^3	16 x 10^3	10 x 10^3	10 x 10^3	10 x 10^3	6 x 10^3	6 x 10^3
Min. electrical endurance		-	415V- at 0.65 pf	5,000	5,000	1,000	1,000	1,000	1,000	500	500	500	500
Connecting capacity		-	Terminal type										
		mm^2	Min/Max	-	-	-	-	-	-	-	-	-	-
		mm	Stud/Cu palm width	8x25	8x25	8x25	8x25	10x30	10x40	12x40	12x40	12x60	12/60
		Nm	Tightening torque	6	8	8	20	25	25	40	40	40	40

Technical Specification - Panel Isolators

Data supplied against tests to BS EN 60947-3. *Two Pole in series.

Fuse Combination Range													
Application	Sym	Unit	Category	32	63	100	125	160	200	250	315	400	630
Rated thermal current	I_{the}	A		32	63	100	125	160	200	250	315	400	630
Rated insulation voltage	U_i	V		750	750	750	750	750	750	750	750	750	750
Rated impulse voltage	U_{imp}	kV		12	12	12	12	12	12	12	12	12	12
Rated operational current	I_e	A	415V- AC23A	32	63	100	125	160	200	250	315	400	630
			220V- DC23A	-	-	100	125	160	200	250	315	400	630
Rated making capacity (AC23A)		A	415V, 0.35 pf	320	630	1,000	1,250	1,600	2,000	2,500	3,150	4,000	6,300
Rated breaking capacity (AC23A)		A	415V, 0.35 pf	256	504	800	1,000	1,280	1,600	2,000	2,520	3,200	5,040
Rated Conditional (Fused) short circuit		kA	S/C current rms	80	80	80	80	80	80	80	80	80	80
		A	back-up fuse	32	63	100	125	160	200	250	315	400	630
Min. mechanical endurance		-	Operations	25,000	25,000	15,000	15,000	15,000	10,000	10,000	10,000	10,000	6,000
Min. electrical endurance		-	415V- at 0.65 pf	1,500	1,500	1,000	1,000	1,000	1,000	1,000	1,000	1,000	1,000
BS fuse format				A2	A2	A4	A4	B1, B2	B1, B2	B1, B2	B1, B4	B1, B4	C1, C3
Connecting capacity		-	Terminal type										
		mm^2	Min/Max	16	25	95	95	120	240	240	300	300	400
		mm	Stud/Cu palm width	-	-	8x20	8x20	8x20	10x25	10x25	10x25	10x25	12x50
		Nm	Tightening torque	2.5	2.5	10	12	16	25	30	35	45	50

Changeover Range											
Application	Sym	Unit	Category	63	100	125	160	200	250	400	630
Rated thermal current	I_{the}	A		63	100	125	160	200	250	400	630
Rated insulation voltage	U_i	V		750	750	1000	1000	1000	1000	1000	1000
Rated impulse voltage	U_{imp}	kV		6	6	6	6	6	12	12	12
Rated operational current	I_e	A	415V- AC22A	63	100	125	160	200	250	400	630
Rated making capacity (AC23A)		A	415V, 0.35 pf	630	630	1,250	1,600	2,000	2,500	4,000	6,300
Rated breaking capacity (AC23A)		A	415V, 0.35 pf	504	504	1,000	1,280	1,600	2,000	3,200	5,040
Short circuit current		kA	rms (with fuses)	80	80	80	80	80	100	100	80
Rated S/C making capacity		kA	Peak	15	15	20	20	20	30	40	50
Min. mechanical endurance		-	Operations	20,000	20,000	10,000	10,000	10,000	10,000	10,000	10,000
Min. electrical endurance		-	415V- at 0.65 pf	2,500	1,500	1,000	1,000	1,000	1,000	1,000	500
Connecting capacity		-	Terminal type								
		mm^2	Max	35	35	95	95	95	240	300	400
		mm	Stud/Cu palm width	6/12	6/12	8/22	8/22	8/22	10/25	10/25	12/50
		Nm	Tightening torque	3	3	10	10	10	30	45	50

Compact Range

A0 Size (25A- 40A) - x1 = n/a | x2= 105-180 | x3 = 105-280

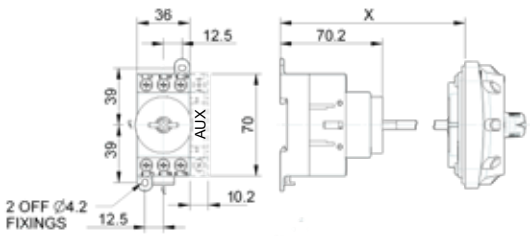

A0-A0 Size (6 pole 25A) - x1 = 98 | x2= 116-191 | x3 = 116-291

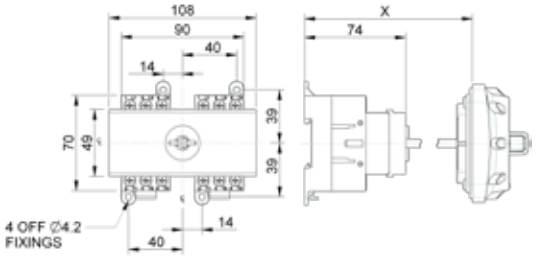





Craig & Derricott Ltd
46 Hall Lane
Walsall Wood
Walsall
West Midlands
WS9 9DP

t: +44(0)1543 375541
e: sales@craigandderricott.com

www.craigandderricott.com

C&D CRAIG & DERRICOTT