PM1608

Flush pressure sensor

PM-,25BREA01-E-ZVG/US

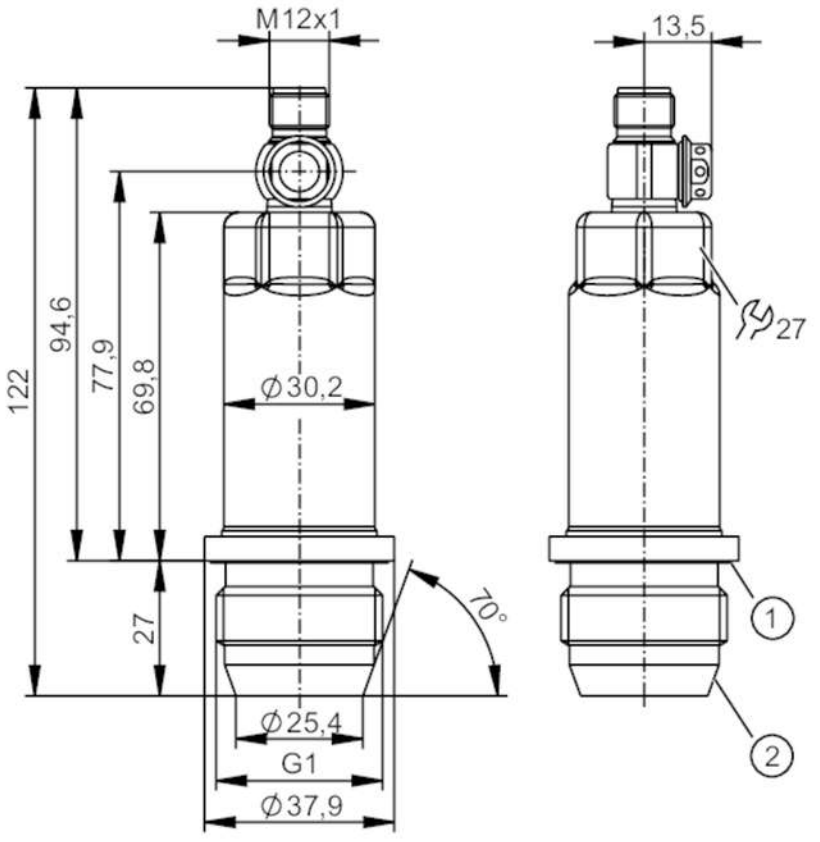

1 groove with sealing ring (DIN EN ISO 1179-2)
2 G1 sealing cone external thread

ACS CE CRN cULus LISTED EC 1935/2004 EHEDG Tested FCM FDA IO-Link Reg31 UKCA

Product characteristics				
Number of inputs and outputs	Number of analogue outputs: 1			
Measuring range	-0.0125...0.25 bar	-12.5...250 mbar	-0.182...3.626 psi	-1.25...25 kPa
Process connection	threaded connection G 1 external thread sealing cone			

Application				
Special feature	Gold-plated contacts			
Measuring element	ceramic-capacitive pressure measuring cell			
Temperature monitoring	no			
Application	flush mountable for the food and beverage industry			
Media	viscous media and liquids with suspended particles; liquids and gases			
Medium temperature [°C]	-25...150			
Min. bursting pressure	30000 mbar	435 psi	3000 kPa	
Pressure rating	6000 mbar	84 psi	600 kPa	
Vacuum resistance [mbar]	-1000			
Type of pressure	relative pressure			
No dead space	yes			
MAWP (for applications according to CRN) [bar]	10			

PM1608

Flush pressure sensor

PM-,25BREA01-E-ZVG/US

Electrical data		
Operating voltage	[V]	18...30 DC
Min. insulation resistance	[MΩ]	100; (500 V DC)
Protection class		III
Reverse polarity protection		yes
Measuring principle		hydrostatic
Integrated watchdog		yes
2-wire		
Current consumption	[mA]	3.5...21.5
Power-on delay time	[s]	1
3-wire		
Current consumption	[mA]	< 45
Power-on delay time	[s]	0.5
Inputs / outputs		
Number of inputs and outputs		Number of analogue outputs: 1
Outputs		
Total number of outputs		2
Output signal		analogue signal; IO-Link; (configurable)
Number of analogue outputs		1
Analogue current output	[mA]	4...20; (scalable)
Max. load	[Ω]	700; (Ub = 24 V; (Ub - 9 V) / 21.5 mA)
Short-circuit proof		yes
Overload protection		yes

Measuring/setting range				
Measuring range	-0.0125...0.25 bar	-12.5...250 mbar	-0.182...3.626 psi	-1.25...25 kPa
Analogue start point	-12.5...200 mbar	-0.182...2.9 psi	-1.25...20 kPa	
Analogue end point	37.5...250 mbar	0.544...3.626 psi	3.75...25 kPa	
In steps of	0.1 mbar	0.002 psi	0.01 kPa	
Factory setting	ASP = 0.0 bar	AEP = 250 mbar		

Accuracy / deviations		
Repeatability	[% of the span]	< ± 0,1; (with temperature fluctuations < 10 K; Turn down 1:1)
Characteristics deviation	[% of the span]	< ± 0,2; (linearity incl. hysteresis and repeatability, limit value setting to DIN EN IEC 62828-1)
Linearity deviation	[% of the span]	< ± 0,15; (Turn down 1:1)
Hysteresis deviation	[% of the span]	< ± 0,15; (Turn down 1:1)
Long-term stability	[% of the span]	< ± 0,1; (Turn down 1:1; per year)

Total deviation over temperature range	Temperature range	total deviation
	-25...15 °C	Characteristics deviation ± 0,1 % der Spanne / 10 K
	15...80 °C	Characteristics deviation
	80...150 °C	Characteristics deviation ± 0,15 % der Spanne / 10 K

PM1608

Flush pressure sensor

PM-,25BREA01-E-ZVG/US

Notes on the accuracy / deviation		for further details see section Diagrams and graphs	
Response times			
Damping for the analogue output dAA	[s]	0...4	
2-wire			
Step response time analogue output	[ms]	30	
3-wire			
Step response time analogue output	[ms]	7	
Interfaces			
Communication interface		IO-Link	
Transmission type		COM2 (38,4 kBaud)	
IO-Link revision		1.1	
Profiles		Digital Measuring Sensor (0x000A), Identification and Diagnosis (0x4000)	
SIO mode		no	
Required master port type		A	
Process data analogue		3	
Min. process cycle time	[ms]	3.2	
Supported DeviceIDs		Type of operation	DeviceID
		Default	669
Operating conditions			
Ambient temperature	[°C]	-25...80	
Storage temperature	[°C]	-40...100	
Protection		IP 67; IP 68; IP 69K	
Tests / approvals			
EMC		DIN EN 61000-6-2	
		DIN EN 61000-6-3	
Shock resistance		DIN EN 60068-2-27	50 g (11 ms)
Vibration resistance		DIN EN 60068-2-6	20 g (10...2000 Hz)
MTTF	[years]	323	
Note on approval		factory certificate available as download at www.factory-certificate.ifm	
UL approval		UL Approval no.	J022
Mechanical data			
Weight	[g]	304.8	
Materials		stainless steel (1.4404 / 316L); PBT	
Materials (wetted parts)		ceramics (99.9 % Al2O3); stainless steel (1.4435 / 316L); surface characteristics: Ra < 0,4 / Rz 4; PTFE	
Min. pressure cycles		100 million	
Tightening torque	[Nm]	20	
Process connection		threaded connection G 1 external thread sealing cone	
Remarks			
Pack quantity		1 pcs.	

PM1608

Flush pressure sensor

PM-,25BREA01-E-ZVG/US

Electrical connection

Connector: 1 x M12; coding: A; Contacts: gold-plated

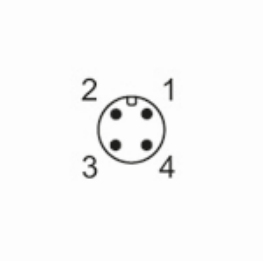

Connection

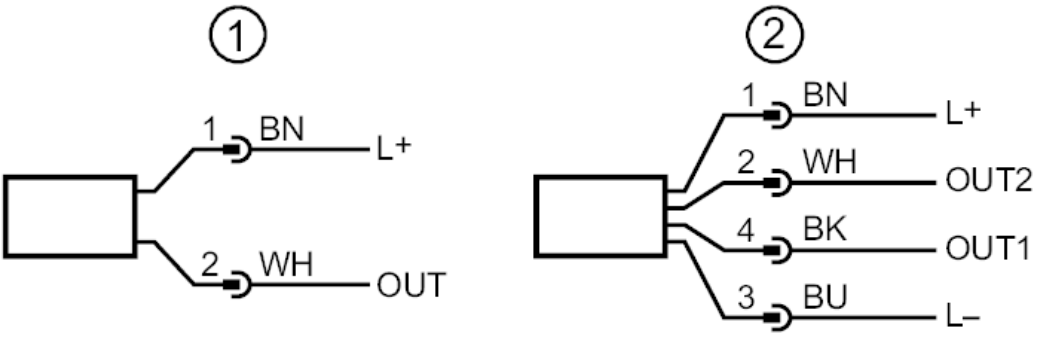

1	connection for 2-wire operation (analogue)
2	connection for 3-wire operation (analogue / IO-Link)
	OUT1 : IO-Link
	OUT2 : analogue output

Diagrams and graphs

ambient temperature influence on the accuracy

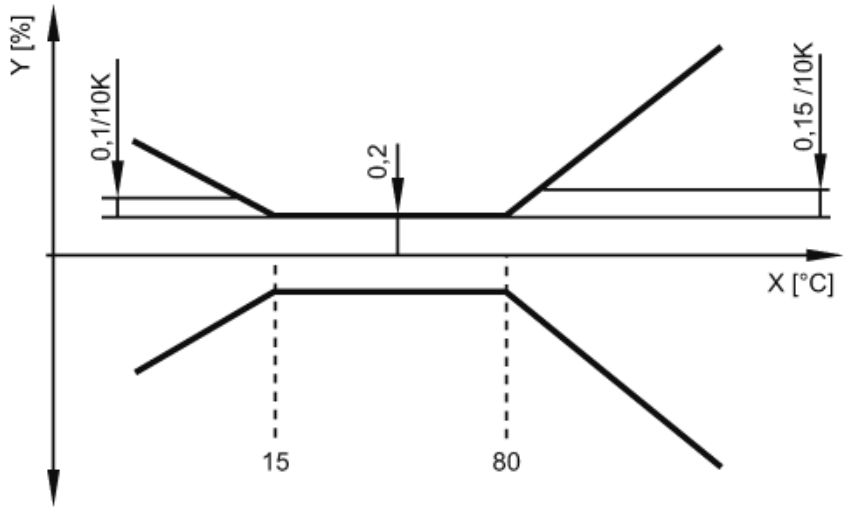

X temperature

Y total deviation