W1G130-AA25-01

EC axial compact fan - ESM



ebm-papst Mulfingen GmbH & Co. KG
Bachmühle 2 · D-74673 Mulfingen
Phone +49 7938 81-0
Fax +49 7938 81-110
info1@de.ebmpapst.com
www.ebmpapst.com

Limited partnership · Headquarters Mulfingen
County court Stuttgart · HRA 590344

General partner Elektrobau Mulfingen GmbH · Headquarters Mulfingen
County court Stuttgart · HRB 590142

Nominal data

Type	**W1G130-AA25-01**
Motor	**M1G055-AI**

Phase		1~	1~
Nominal voltage	VAC	230	230
Frequency	Hz	50/60	50/60
Type of data definition		ml	ml
Speed (rpm)	min^{-1}	3200	2800
Power input	W	24	
Current draw	A	0.19	
Max. back pressure	Pa	90	
Min. ambient temperature	°C	-30	-30
Max. ambient temperature	°C	60	70

ml = Max. load · me = Max. efficiency · fa = Running at free air · cs = Customer specs · cu = Customer unit
Subject to alterations

EC axial compact fan - ESM

Technical features

Mass	0.75 kg
Size	130 mm
Motor size	55
Material of impeller	PA plastic
Material of wall ring	PP plastic
Number of blades	7
Direction of air flow	V
Direction of rotation	Counter-clockwise, seen on rotor
Type of protection	IP55
Insulation class	"B"
Humidity (F) / environmental protection class (H)	H1+
Note ambient temperature	Occasional start-up between -40°C and -25°C is permissible. For continuous operation at ambient temperatures below -25°C (e.g. refrigeration applications) we recommend our fan version with special low-temperature bearings.
Max. permissible ambient motor temp. (transp./ storage)	+ 80 °C
Min. permissible ambient motor temp. (transp./storage)	- 40 °C
Mounting position	Any
Condensation drainage holes	None
Operation mode	S1
Motor bearing	Ball bearing
Technical features	- Speed selection max/min - Soft start - Over-temperature protected motor
Speed steps	2
EMC interference immunity	Acc. to EN 61000-6-2 (industrial environment)
EMC harmonics	Acc. to EN 61000-3-2/3
EMC interference emission	Acc. to EN 61000-6-3 (household environment)
Motor protection	Thermal overload protector (TOP) wired internally
Cable exit	Lateral
Protection class	II
Product conforming to standard	EN 60335-1; EN 60335-2-24; EN 60335-2-80; EN 60335-2-89; CE
Approval	VDE; CSA C22.2 no. 77 + CAN/CSA-E60730-1; CCC; EAC; UL 1004-3 + 60730-1

ebm-papst Mulfingen GmbH & Co. KG · Bachmühle 2 · D-74673 Mulfingen · Phone +49 (0) 7938 81-0 · Fax +49 (0) 7938 81-110 · info1@de.ebmpapst.com · www.ebmpapst.com

EC axial compact fan - ESM

Product drawing

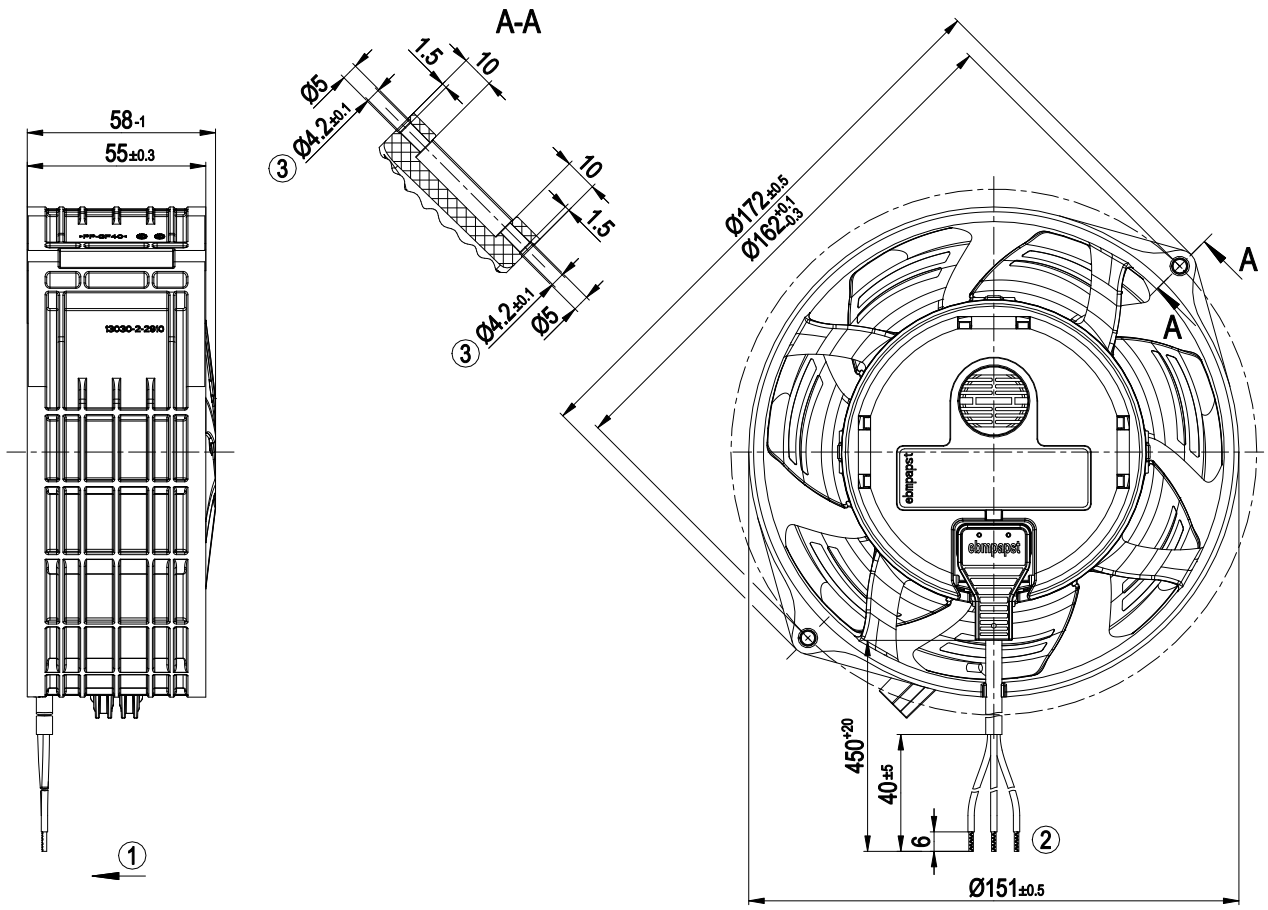

1	Direction of air flow "V"
2	Connection line PVC AWG20
	3x lead tip
3	Preferably fit 2x Remform screw WN-156-2 5.0x16 Torx galvanised (Arnold). Alternatively 2x metric bolt M4, fastening with nut

ebm-papst Mulfingen GmbH & Co. KG · Bachmühle 2 · D-74673 Mulfingen · Phone +49 (0) 7938 81-0 · Fax +49 (0) 7938 81-110 · info1@de.ebmpapst.com · www.ebmpapst.com

EC axial compact fan - ESM

Connection screen

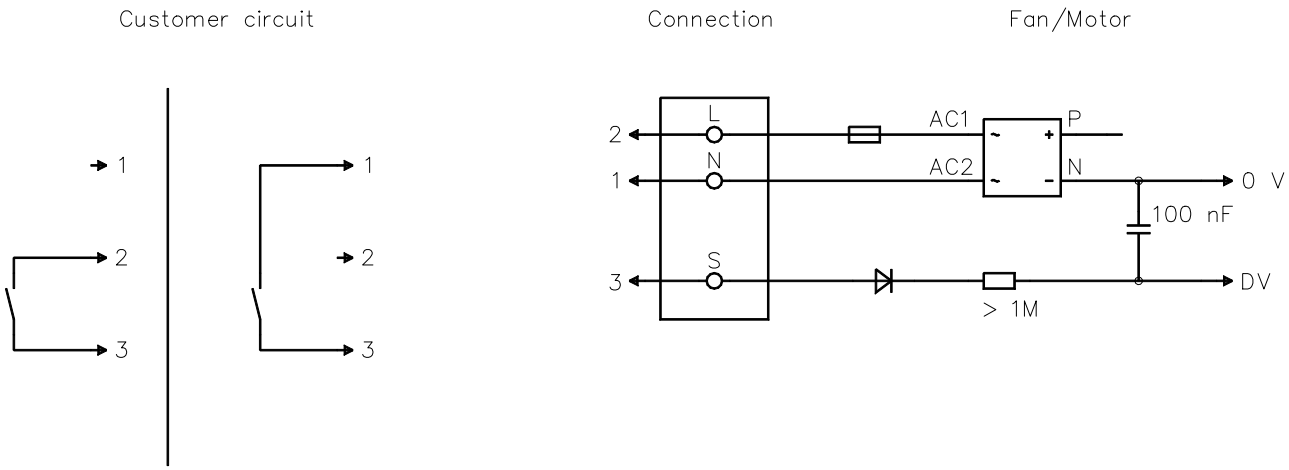

No.	Conn.	Designation	Colour	Function / assignment
1	N		blue	Neutral conductor
2	L		black	Power supply 230 VAC, 50-60 Hz, see type plate for voltage range
3	S		brown	Speed selection: Switch open = speed 1 (fast), switch closed = speed 2 (slow)

ebm-papst Mulfingen GmbH & Co. KG · Bachmühle 2 · D-74673 Mulfingen · Phone +49 (0) 7938 81-0 · Fax +49 (0) 7938 81-110 · info1@de.ebmpapst.com · www.ebmpapst.com

EC axial compact fan - ESM

Charts: Air flow 50 Hz

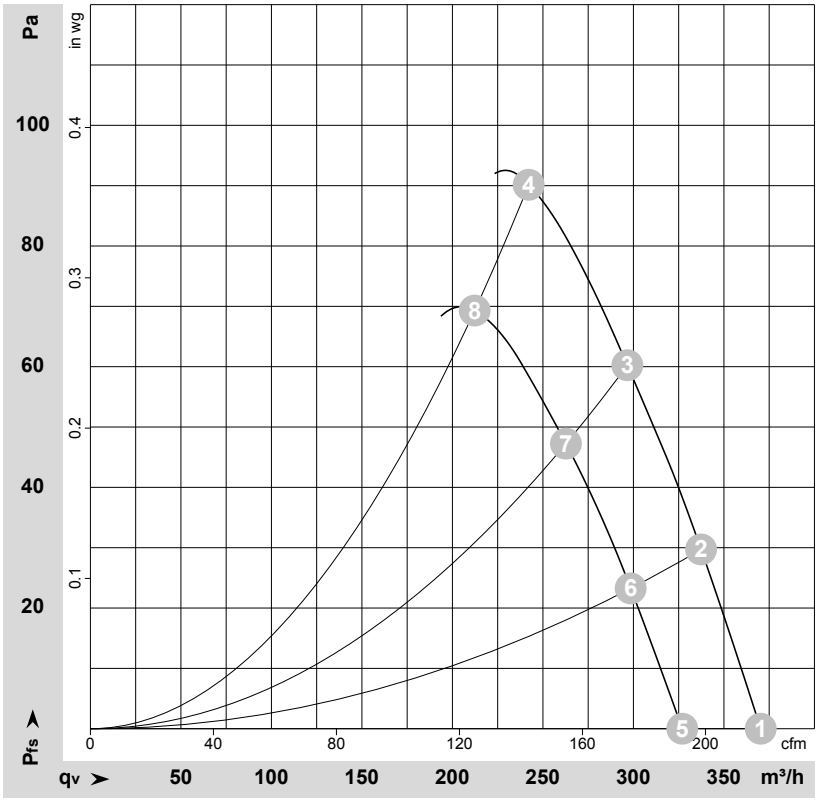

ρ = 1.177 kg/m³ ± 2 %

Measurement: LU-139739-1
Measurement: LU-140010-1

Air performance measured as per ISO 5801 Installation category A. For detailed information on the measuring set-up, please contact ebm-papst. Suction-side noise levels: LwA measured as per ISO 13347 / LpA measured with 1m distance to fan axis. The values given are valid under the measuring conditions mentioned above and may vary according to the actual installation situation. With any deviation from the standard set-up, the specific values have to be checked and reviewed with the unit installed.

Measured values

	U	f	n	P_{ed}	I	LpA_{in}	LwA_{in}	q_V	p_{fs}	q_V	p_{fs}
	V	Hz	min^{-1}	W	A	dB(A)	dB(A)	m^3/h	Pa	cfm	in. wg
1	230	50	3200	23	0.19	55	63	370	0	220	0.00
2	230	50	3200	24	0.19	53	61	335	30	200	0.12
3	230	50	3200	24	0.19	51	60	295	60	175	0.24
4	230	50	3200	24	0.19	54	63	240	90	140	0.36
5	230	50	2800	16	0.13	51	60	325	0	190	0.00
6	230	50	2800	16	0.13	50	58	300	24	175	0.10
7	230	50	2800	16	0.13	48	57	265	47	155	0.19
8	230	50	2800	16	0.13	53	61	210	70	125	0.28

U = Supply voltage · f = Frequency · n = Speed (rpm) · P_{ed} = Power input · I = Current draw · LpA_{in} = Sound pressure level inlet side · LwA_{in} = Sound power level inlet side · q_V = Air flow
p_{fs} = Pressure increase

ebm-papst Mulfingen GmbH & Co. KG · Bachmühle 2 · D-74673 Mulfingen · Phone +49 (0) 7938 81-0 · Fax +49 (0) 7938 81-110 · info1@de.ebmpapst.com · www.ebmpapst.com