finder
RELAYING INNOVATION



7F.20-4400
7F.30-4400

7F.02
7F.03

	7F.2x.x.xxx.4400 **7F.2x.x.xxx.4400.0** **7F.3x.x.xxx.4400**	
	U_N 110...120 V AC (50/60 Hz) (8.120) U_N 230...240 V AC (50/60 Hz) (8.230)	
	P_N 120 V AC (50/60 Hz) 72/120 W P_N 230 V AC (50/60 Hz) 69/112 W	
OUT	m^3/h (50/60Hz)	400/445
	m^3/h (50/60Hz)	270/300
	dB (A)	72 (AC)
	(–15...+55)°C (–30...+55)°C only for 7F.3x	
	IP54 / Type 12 -> 7F.2x IP54 / Type 3R -> 7F.3x	

c UL us

For Use on a Flat Surface of a Type 1, 12 Enclosure (For type 7F.2x)
For Use on a Flat Surface of a Type 1, 3R Enclosure (For type 7F.3x)
Use copper conductor only, 90°C min
Conductor size 14-18 AWG
Surrounding air temperature 55°C

1

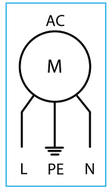

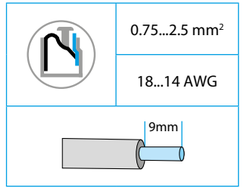

2

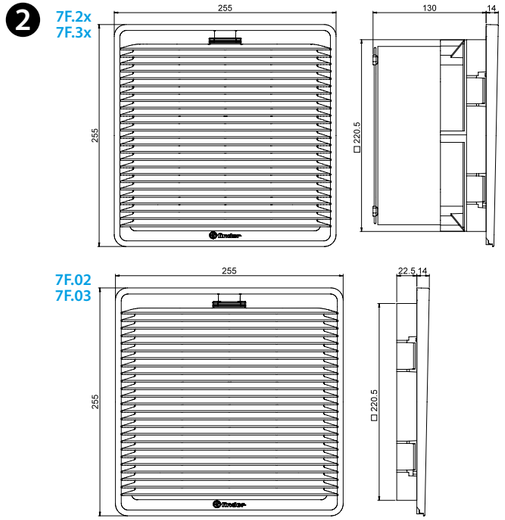

3

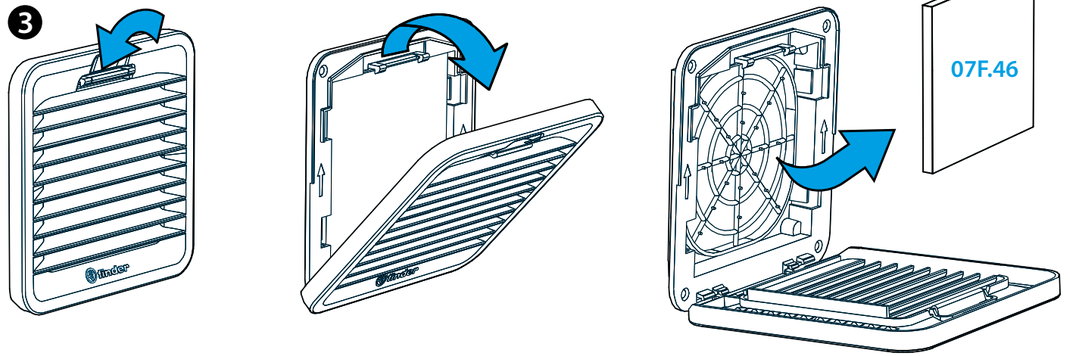

4

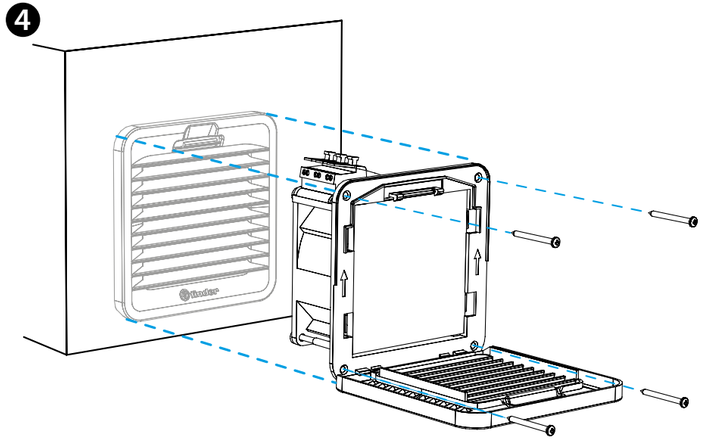

ENGLISH

FOR INDOOR USE:
7F.20 FILTER FAN
7F.21 FILTER FAN WITH REVERSE FLOW FILTER

FOR OUTDOOR USE:
7F.30 FILTER FAN
7F.31 FILTER FAN WITH REVERSE FLOW FILTER

1 WIRING DIAGRAM AC

2 OUTLINE DRAWING (mm)
7F.2x/3x **Fan**
7F.02/03 **Grid**

3 GRID OPENING - FILTER REPLACEMENT
Spare filters: Fan 07F.46
Exhaust 07F.45
Filter mat class
EU3 according to DIN 24185, filtering degree (80...90)%.
Filter material
Synthetic fibre with progressive construction, temperature resistant to 100°C, self extinguishing, Class F1 (DIN 53438).

4 MOUNTING (example)
The installation with the only clips is optimized for 1.5 mm thick sheets.
It is also possible with thicknesses from 2.5 mm.
Fixing with screws (supplied) is recommended.
Tightening torque 0.3 Nm.

NOTE

For indoor use

7F.2x.x.xxx.4400	Fan	Grey Color	RAL 7035
7F.2x.x.xxx.4400.**0**	Fan	Black Color	RAL 9004
7F.02.0.000.4000	Grid	Grey Color	RAL 7035
7F.02.0.000.4000.**0**	Grid	Black Color	RAL 9004

For outdoor use

7F.3x.x.xxx.4400	Fan	Grey Color	RAL 7000
7F.03.0.000.4000	Grid	Grey Color	RAL 7000

finder

Utility Model - IB7F204400VXX - 05/25- Finder S.p.A. con unico socio - 10040 ALMESE (TO) - ITALY