Space-saving Fan Heater HV 031 / HVL 031 Series 100W to 400W



- Compact
- Flat design
- High air through-flow
- Temperature safety cut-out
- Clip fixing

The compact high-performance fan heater prevents formation of condensation in control or switch systems and provides an evenly distributed interior air temperature in enclosures. This fan heater is available without fan (HV 031) as well as with fan (HVL 031).

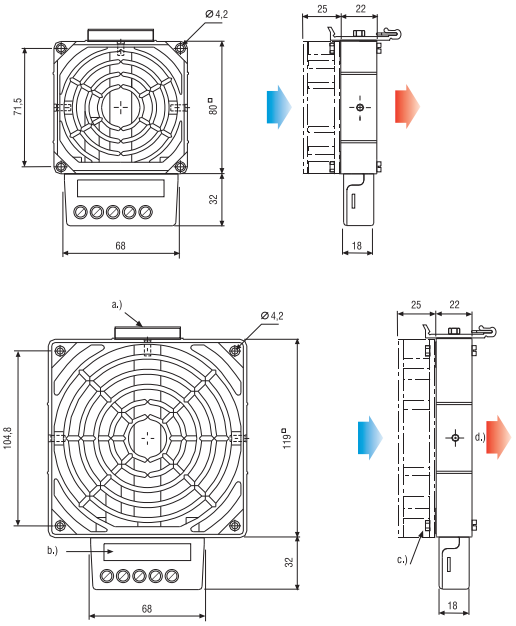

a.) Clip
b.) Type plate
c.) Axial fan
d.) Air direction

Technical Data

HV 031	Heater without fan (fan mounting kit included)
HVL 031	Heater with fan
Heating element	high performance cartridge
Temperature safety cut-out	to protect against overheating in case of fan failure, automatic reset
Heater body	die-cast aluminium (glass bead blasted)
Connection	3-pole screw connector 2.5mm², clamping torque 0.8Nm max.
Connection casing	plastic according to UL94 V-0, black
Mounting	clip for 35mm DIN rail, EN 60715
Fitting position	vertical airflow (air outlet up)
Operating / Storage temperature	-45 to +70°C (-49 to +158°F)
Operating / Storage humidity	max. 90 % RH (non-condensing)
Protection type / Protection class	IP20 / I (earthed)
Approvals	UL File No. E187294 (230V only: VDE)
HVL 031 only:	
Axial fan, ball bearing	airflow see table
	service life 50,000h at 25°C (77°F)
Connection (axial fan)	2-pole screw connector 2.5mm² (L2/N2)



Important! Heater may only be operated together with fan. Danger of overheating!

Art. No. HV 031 230VAC, 50/60Hz	Art. No. HV 031 120VAC, 50/60Hz	Heating capacity	Pre-fuse T (time-delay) 230VAC / 120VAC	Dimensions	Weight (approx.)
03100.0-00	03100.9-00	100W	1A / 1.4A	80 x 112 x 22mm	0.4kg
03101.0-00	03101.9-00	150W	1.25A / 2A	80 x 112 x 22mm	0.4kg
03110.0-00	03110.9-00	200W	1.4A / 2.5A	119 x 151 x 22mm	0.5kg
03111.0-00	03111.9-00	300W	2A / 4A	119 x 151 x 22mm	0.5kg
03112.0-00	03112.9-00	400W	4A / 5A	119 x 151 x 22mm	0.5kg

Art. No. HVL 031 230VAC, 50/60Hz	Art. No. HVL 031 120VAC, 50/60Hz	Heating capacity	Pre-fuse T (time-delay) 230VAC / 120VAC	Airflow min., free flow	Dimensions	Weight (approx.)
03102.0-00	03102.9-00	100W	1A / 1.4A	35m³/h	80 x 112 x 47mm	0.6kg
03103.0-00	03103.9-00	150W	1.25A / 2A	35m³/h	80 x 112 x 47mm	0.6kg
03113.0-00	03113.9-00	200W	1.4A / 2.5A	108m³/h	119 x 151 x 47mm	0.9kg
03114.0-00	03114.9-00	300W	2A / 4A	108m³/h	119 x 151 x 47mm	0.9kg
03115.0-00	03115.9-00	400W	4A / 5A	108m³/h	119 x 151 x 47mm	0.9kg

Specifications are subject to change without notice. Errors and omissions excepted. Suitability of this product for its intended use and any associated risks must be determined by the end customer/ buyer in its final application. 04.08.2010