30847-605 PLUG-IN UNIT FRONT PANEL, UNSHIELDED, FOR STATIC TRAPEZOID HANDLE, 3 U, 6 HP, 2.5 MM, AL, FRONT ANODIZED, REAR CONDUCTIVE



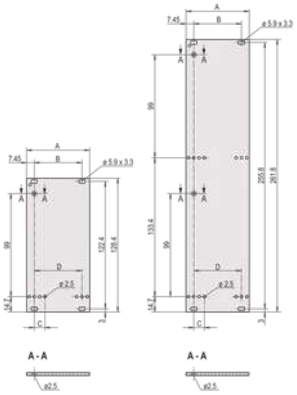

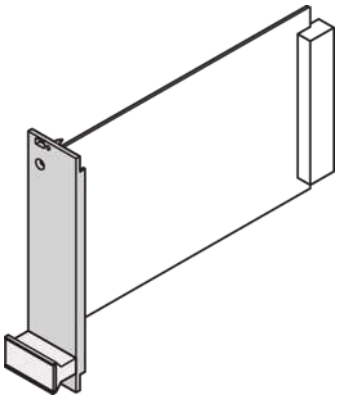

KEY FEATURES

- Front panel, unshielded
- Front panel, Al, 2.5 mm, front anodized, conductive

PRODUCT ATTRIBUTES

- Type: Front Panel for Handle (PIU)
- Accessory Type: Front panel
- Handle Type: Trapezoid, Static; Aluminum Profile
- Mounting: Screw-on Front
- EMC Shielding: No
- Material: Aluminum
- Front Finish: Anodized
- Rear Finish: Conductive
- Treated Edges: No
- Rack Height: 3 U
- Rack Width: 6 HP
- Height: 128.4 mm
- Width: 30.1 mm

Depth: 2.5 mm

Complies With: IEC 60297-3-101

Package Quantity: 5

ADDITIONAL PRODUCT DETAILS

The front panel enables the assembly of a plastic or Alu-profile static trapezoid handle. The front panel cannot be shielded with a textile gasket.

CERTIFICATIONS

RoHS COMPLIANT

North America
All locations
+1.763.422.2661
Chat with us:
schroff.nvent.com

Europe
Straubenhardt, Germany
+49.7082.794.0
Betschdorf, France
+33.3.88.90.64.90
Warsaw, Poland
+48.22.209.98.35
Assago, Italy
+39.02.932.7141
Chat with us:
schroff.nvent.com

Asia
Shanghai, China
+86.21.2412.6943
Qingdao, China
+86.532.8771.6101
Singapore
+65.6768.5800
Shin-Yokohama, Japan
+81.45.476.0271
Chat with us:
schroff.nvent.com

Middle East & India
Dubai, United Arab Emirates
+971.4.378.1700
Bangalore, India
+91.80.6715.2001
Istanbul, Turkey
+90.216.250.7374
Chat with us:
schroff.nvent.com

nVent

Our powerful portfolio of brands:
nVent.com CADDY ERICO HOFFMAN RAYCHEM SCHROFF TRACER

© 2023 nVent. All nVent marks and logos are owned or licensed by nVent Services GmbH or its affiliates. All other trademarks are the property of their respective owners.

nVent reserves the right to change specifications without notice.