# LPMLB1

LED integrated monoblock pilot light, steady light Ø22mm Platinum series chromed plastic, orange, 24VAC/DC



| | | | |
|---|---|---|---|
| Product designation | | | LED integrated monoblock pilot lights steady light |
| Product type designation | | | LPML |
| **General characteristics** | | | |
| Colour | | | Orange |
| Material | | | Polyamide |
| IEC degree of protection | | | IP66, IP67 and IP69K on front; IP20 on rear |
| **Electrical characteristics** | | | |
| Rated frequency | | Hz | 50-60 |
| Supply voltage (AC) | | V | 24 (-15% … +10% Ue) |
| Supply voltage (DC) | | V | 24 (-15% … +10% Ue) |
| **Operations** | | | |
| Electrical life | | hours | >30000 |
| **Mechanical features** | | | |
| Tightening torque for terminals max | | Nm | 0.8 |
| Terminals screw | | | Screw termination |
| Conductor section | | | |
| | AWG/kcmil conductor section | | |
| | min | | 18 |
| | max | | 16 |
| | IEC | | |
| | max | mm² | 2.5 |
| Fixing | | | Ring fixing Ø22mm |
| Weight | | g | 21 |
| **UL technical data** | | | |
| UL degree of protection | | | Type1, 2, 3R, 4, 4X, 12, 12K on front |
| **Ambient conditions** | | | |
| Temperature | | | |
| | Operating temperature | | |
| | min | °C | -25 |
| | max | °C | +70 |
| **Dimensions** | | | |


The characteristics described in this document are subject to updates or modifications at any time. The descriptions, technical and functional information, illustrations and instructions in this brochure are purely illustrative, and are consequently not contractually binding

# LPMLB1

LED integrated monoblock pilot light, steady light Ø22mm Platinum series chromed plastic, orange, 24VAC/DC

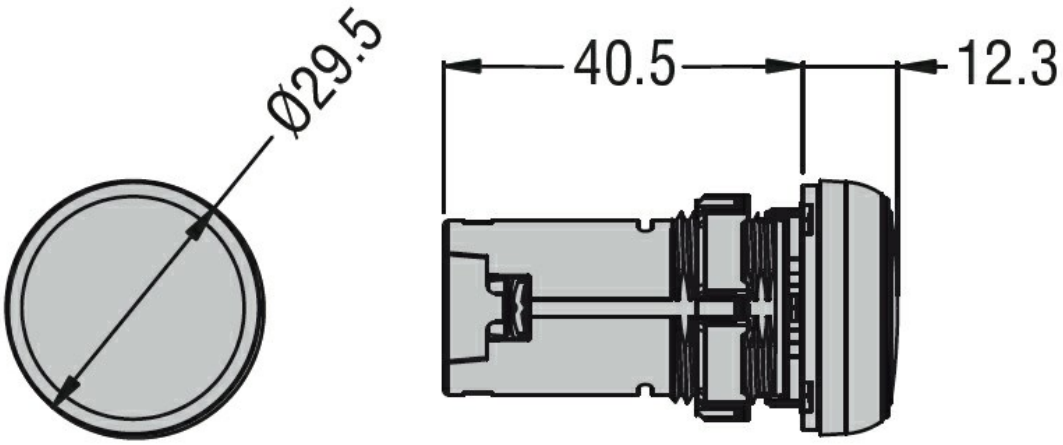


## Wiring diagrams

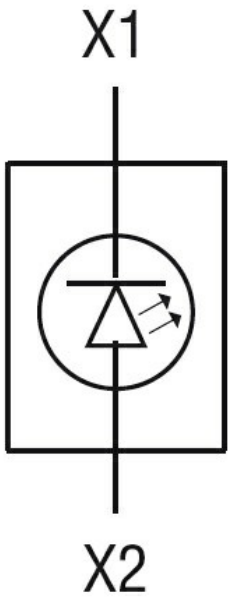


## Certifications and compliance

Compliance

| |
|---|
| CSA C22.2 n° 14 |
| IEC/EN/BS 60947-1 |
| IEC/EN/BS 60947-5-1 |
| UL508 |

Certificates

| |
|---|
| cULus |
| EAC |

## ETIM classification

| | |
|---|---|
| ETIM 8.0 | EC000272 - Indicator light complete |


The characteristics described in this document are subject to updates or modifications at any time. The descriptions, technical and functional information, illustrations and instructions in this brochure are purely illustrative, and are consequently not contractually binding