Lovato electric
ENERGY AND AUTOMATION

P1RD2P25A300

RESIDUAL CURRENT OPERATED CIRCUIT BREAKER, 2 MODULES, 2P - TYPE A, 25A, 300MA



Product designation			Residual current circuit breakers (RCCB)
Product type designation			P1RD
Number of poles			2P
Number of DIN modules			2
Compliance			IEC
Electrical features			
Rated insulation voltage Ui IEC/EN		V	400
Rated impulse withstand voltage Uimp		kV	4
Rated operational voltage AC (IEC)		VAC	230
Rated frequency		Hz	50/60
Rated current (In)		A	25
Residual operation characteristic			A
Rated residual current		mA	300
Short circuit rating (IEC)		kA	10
Electrical life		cycles	10000
Ambient conditions			
Operating temperature			
	min	°C	-25
	max	°C	+60
Storage temperature			
	min	°C	-40
	max	°C	+80
Max altitude		m	2000
Mechanical features			
Operating position			
	normal		Vertical plan
Fixing			35mm DIN rail
Tightening torque for terminals			
	max	Nm	2
	max	lbin	15
Terminals tool			Pz 2
Conductor section			
IEC			
	min	mm²	2.5
	max	mm²	35
AWG/Kcmil			
	min		14
	max		2
Mechanical life		cycles	20000
Weight		g	185
Frontal IP degree			IP20
Pollution degree			2
Dimensions			

The characteristics described in this document are subject to updates or modifications at any time. The descriptions, technical and functional information, illustrations and instructions in this brochure are purely illustrative, and are consequently not contractually binding

P1RD2P25A300

RESIDUAL CURRENT OPERATED CIRCUIT BREAKER, 2 MODULES, 2P - TYPE A, 25A, 300MA

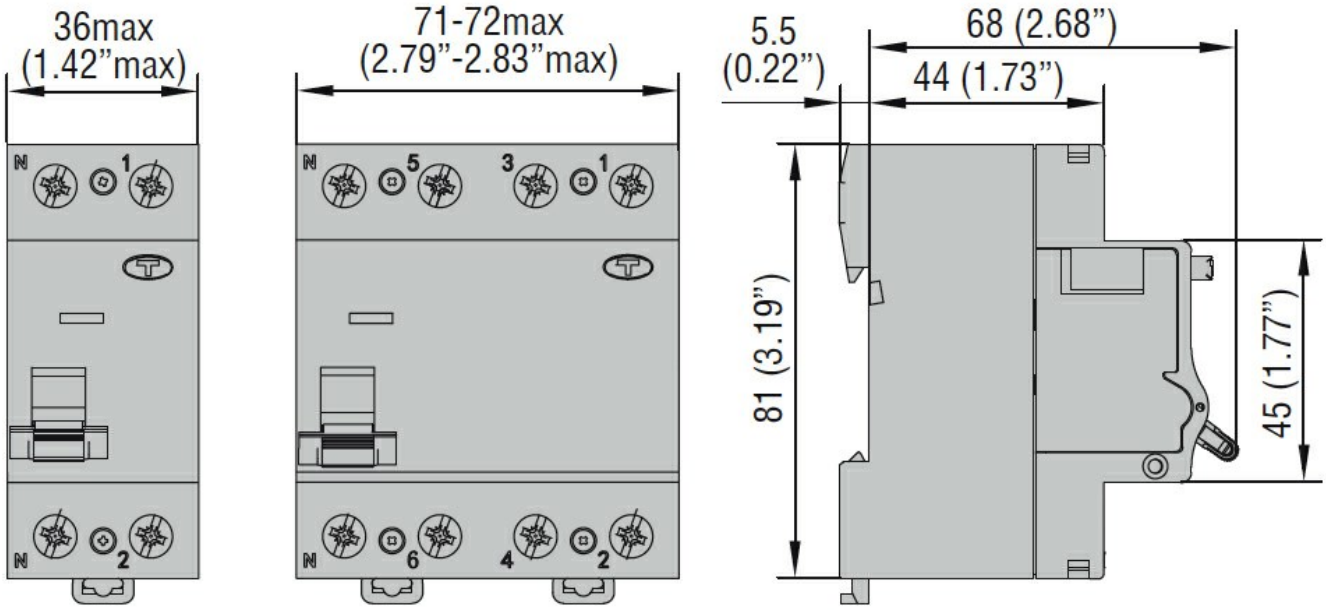

Certifications and compliance

Compliance	
	IEC/EN/BS 61008-1
Certifications	
	EAC
	TÜV-SUD

ETIM classification

ETIM 8.0	EC000003 - Residual current circuit breaker (RCCB)

The characteristics described in this document are subject to updates or modifications at any time. The descriptions, technical and functional information, illustrations and instructions in this brochure are purely illustrative, and are consequently not contractually binding