# LMC510

## Sensor for point level detection

LMFCE-N12E-QSKG-1/US

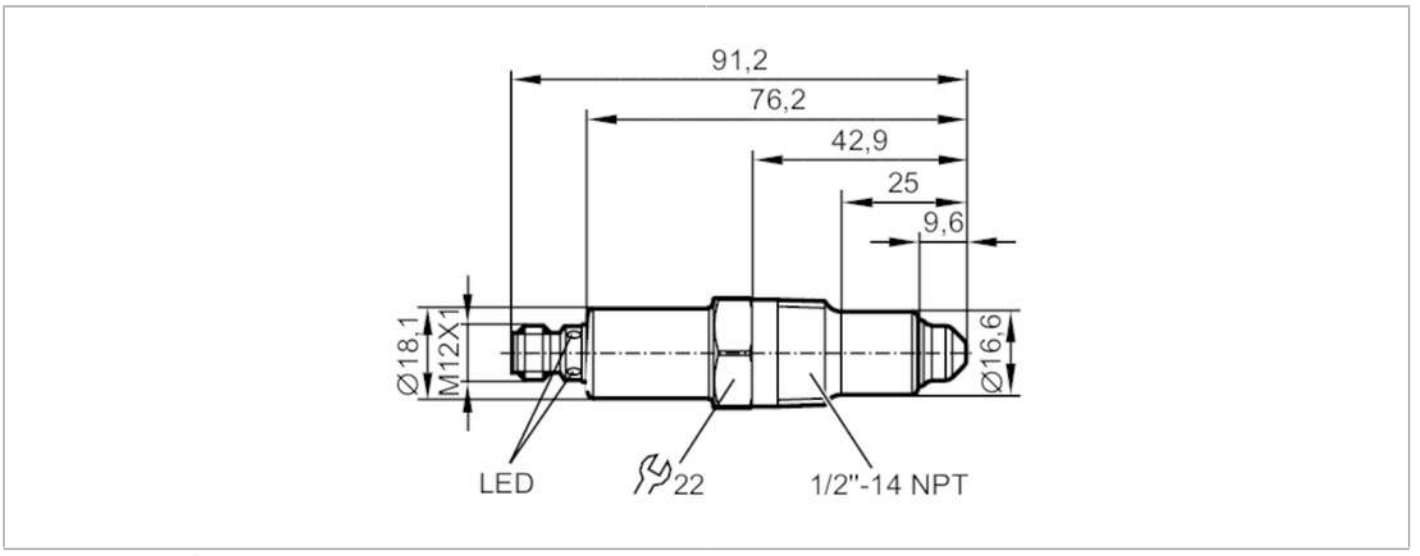


| | | | |
|---|---|---|---|
| **Product characteristics** | | | |
| Number of inputs and outputs | | Number of digital outputs: 2 | |
| Factory setting | | oils; oil-based media | |
| Process connection | | 1/2" NPT | |
| **Application** | | | |
| Special feature | | Gold-plated contacts | |
| Media | | water; hydrous media; oils; oil-based media; coolants; powder | |
| Cannot be used for | | See the operating instructions, chapter "Function and features". | |
| Medium temperature | [°C] | -25...100 | |
| Probe length | [mm] | 25 | |
| Tank pressure | | -1...40 bar | -0.1...4 MPa |
| MAWP (for applications according to CRN) | [bar] | 40 | |
| Oil | | | |
| Medium temperature | [°C] | -25...100 | |
| **Electrical data** | | | |
| Operating voltage | [V] | 18...30 DC | |
| Current consumption | [mA] | < 35 | |
| Protection class | | III | |
| Reverse polarity protection | | yes | |
| **Inputs / outputs** | | | |
| Number of inputs and outputs | | Number of digital outputs: 2 | |
| **Outputs** | | | |
| Total number of outputs | | 2 | |
| Output signal | | switching signal; IO-Link | |
| Electrical design | | PNP/NPN | |
| Number of digital outputs | | 2 | |
| Output function | | normally open / normally closed; (parameterisable) | |

# LMC510

## Sensor for point level detection

LMFCE-N12E-QSKG-1/US

| | | | |
|---|---|---|---|
| Max. voltage drop switching output DC | [V] | 2.5 | |
| Permanent current rating of switching output DC | [mA] | 50; (100 (...60 °C)) | |
| Short-circuit protection | | yes | |
| Type of short-circuit protection | | thermal, pulsed | |
| Overload protection | | yes | |
| **Measuring/setting range** | | | |
| Factory setting | | oils; oil-based media | |
| **Response times** | | | |
| Response time | [s] | < 0.5 | |
| **Interfaces** | | | |
| Communication interface | | IO-Link | |
| Transmission type | | COM2 (38,4 kBaud) | |
| IO-Link revision | | 1.1 | |
| SDCI standard | | IEC 61131-9 | |
| Profiles | | Smart Sensor: Process Data Variable; Device Identification, Device Diagnosis | |
| SIO mode | | yes | |
| Required master port type | | A | |
| Process data analogue | | 1 | |
| Process data binary | | 2 | |
| Min. process cycle time | [ms] | 2.3 | |
| Supported DeviceIDs | | **Type of operation** | **DeviceID** |
| | | default | 675 |
| **Operating conditions** | | | |
| Ambient temperature | [°C] | -25...85 | |
| Storage temperature | [°C] | -40...85 | |
| Protection | | IP 68; IP 69K; (7 days / 1 m water depth / 0.1 bar: IP 68) | |
| **Tests / approvals** | | | |
| EMC | | DIN EN 61000-6-2 | |
| | | DIN EN 61000-6-3 | : closed tanks |
| | | DIN EN 61000-6-4 | : open tanks |
| Shock resistance | | DIN EN 60068-2-27 | 50 g (11 ms) |
| Vibration resistance | | DIN EN 60068-2-6 | 20 g (10...2000 Hz) |
| MTTF | [years] | 534 | |
| UL approval | | UL Approval no. | H005 |
| **Mechanical data** | | | |
| Weight | [g] | 115 | |
| Dimensions | [mm] | Ø 18.11 / L = 76.2 | |
| Materials | | stainless steel (316L/1.4404); PEEK; PEI; FKM | |
| Materials (wetted parts) | | stainless steel (316L/1.4404); PEEK; FKM | |
| Process connection | | 1/2" NPT | |

# LMC510

## Sensor for point level detection

LMFCE-N12E-QSKG-1/US

| Displays / operating elements | | |
|---|---|---|
| Display | switching status | LED, yellow |
| | operating status | LED, green |

| Remarks | |
|---|---|
| Pack quantity | 1 pcs. |

## Electrical connection

Connector: 1 x M12; coding: A; Contacts: gold-plated




### Connection

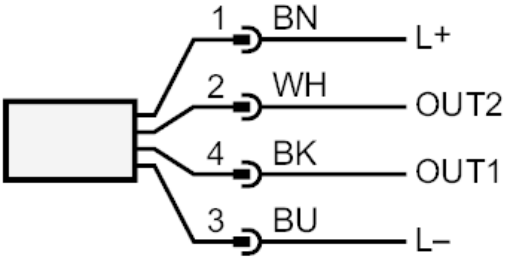


| | |
|---|---|
| OUT1: | switching output IO-Link |
| OUT2: | switching output |
| | colours to DIN EN 60947-5-2 |
| | Core colours : |
| BK = | black |
| BN = | brown |
| BU = | blue |
| WH = | white |