PERFORMANCE MADE SMARTER



# Bipolar isolated converter / splitter

## 3118

- Conversion of voltage and current bipolar process signals to uni-/bipolar signals
- Multiple signal ranges are selectable via DIP-switches
- Splitter function: 1 signal in and 2 signals out
- Excellent accuracy, better than 0.05 % of selected range and high output load stability

### Application

- The 3118 is an isolating converter and splitter which can be used for signal conversion of standard bipolar analog process signals into two individual unipolar analog signals.
- The unit offers 4-port isolation and provides surge suppression and protects control systems from transients and noise.
- The 3118 also eliminates ground loops and can be used for measuring floating signals.
- Mounting of the 3118 can be in Safe area or in Zone 2 and Cl. 1 Div 2 area and is approved for marine applications.
- The analog output can be easily configured and programmed to be bipolar in the ranges ±10 mA and ±20 mA (*special setup).

### Technical characteristics

- Flexible 24 VDC (±30%) supply via power rail or connectors.
- Excellent conversion accuracy, better than 0.05% of selected range.
- A green front LED indicates operation status for the device.
- All terminals are protected against overvoltage and polarity error.
- Meeting the NAMUR NE21 recommendations, the 3118 ensures top measurement performance in harsh EMC environments.
- High galvanic isolation of 2.5 kVAC.
- Fast input to output response time < 7 ms / > 100 Hz – 10 Hz bandwidth damping possible via DIP-switch.
- Excellent signal/noise ratio > 60 dB.

### Mounting / installation / programming

- Easy configuration of factory calibrated measurement ranges via DIP-switches.
- A very low power consumption allows DIN rail mounting without the need for any air gap.
- Wide temperature operation range: -25...+70°C.

### Applications

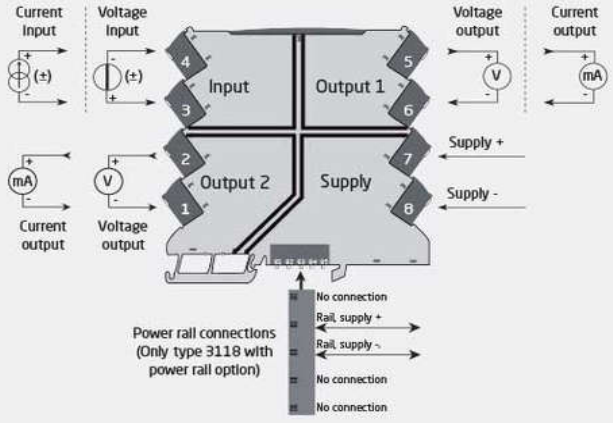


*(*) Bipolar Input to bipolar output wiring set-up:*

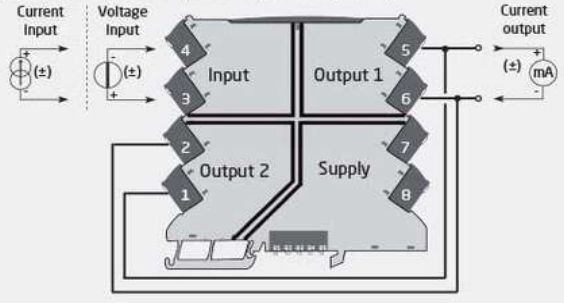


*Safe Area or Zone 2 & Cl. 1, Div. 2, gr. A-D*

This page is automatically generated on the basis of information provided on www.prelectronics.com and affiliated websites. It is provided to you as a service and for information purpose only. While we have attempted to maintain the information as accurately as possible, the page may contain errors or omissions for which we disclaim any and all liability

Order

| Type | Version | |
|---|---|---|
| 3118 | With power rail connector / terminals | : - |
| | Supplied via terminals | : - N |

Example: 3118

## Environmental Conditions

Operating temperature ..... -25°C to +70°C
Storage temperature ..... -40°C to +85°C
Calibration temperature ..... 20...28°C
Relative humidity ..... < 95% RH (non-cond.)
Protection degree ..... IP20
Installation in ..... Pollution degree 2 & meas. / overvoltage cat. II

## Mechanical specifications

Dimensions (HxWxD) ..... 113 x 6.1 x 115 mm
Weight approx. ..... 70 g
DIN rail type ..... DIN EN 60715/35 mm
Wire size ..... 0.13...2.5 $mm^2$ / AWG 26...12 stranded wire
Screw terminal torque ..... 0.5 Nm
Vibration ..... IEC 60068-2-6
2...25 Hz ..... ±1.6 mm
25...100 Hz ..... ±4 g

## Common specifications

**Supply**

Supply voltage ..... 16.8...31.2 VDC
Max. required power ..... 1.20 W
Max. power dissipation ..... 0.43 W

**Isolation voltage**

Isolation voltage, test / working ..... 2.5 kVAC / 300 VAC (reinforced)
Zone 2 / Div. 2 ..... 250 VAC

**Response time**

Response time (0...90%, 100...10%) ..... < 7 ms or < 44 ms

MTBF, acc. to IEC 61709 (SN29500) ..... > 187 years
Signal / noise ratio ..... Min. 60 dB (0...100 kHz)
Signal dynamics, input ..... Analog signal chain
Signal dynamics, output ..... Analog signal chain
Programming ..... DIP-switches
Cut-off frequency (3 dB) ..... > 100 Hz or 10 Hz (selectable via DIP-switch)
Accuracy ..... < ±0.05% of span
Temperature coefficient ..... < ±0.01% of span / °C
EMC immunity influence ..... < ±0.5% of span
Extended EMC immunity: NAMUR NE21, A criterion, burst ..... < ±1% of span

## Input specifications

**Current input**

Measurement range ..... -23...+23 mA
Programmable measurement ranges ..... ± 10 and ± 20 mA
Input voltage drop ..... < 1 VDC @ 23 mA

**Voltage input**

Measurement range ..... -11.5...+11.5 V
Programmable ranges ..... ±5 and ±10 V
Input resistance ..... ≥ 1 MΩ

## Output specifications

**Current output**

Signal range ..... 0...23 mA
Programmable signal ranges ..... 0 / 4...20 mA
Bipolar wiring and programming set-up ..... ±10 and ± 20 mA
Load (@ current output) ..... ≤ 300 Ω per channel
Load stability ..... ≤ 0.002% of span / 100 Ω
Current limit ..... ≤ 28 mA

**Voltage output**

Signal range ..... 0...10 VDC
Programmable signal ranges ..... 0/1...5 and 0/2...10 V
Load (@ voltage output) ..... ≥ 10 kΩ

of span ..... = of the presently selected range

## I.S. / Ex marking

ATEX ..... II 3 G Ex nA IIC T4 Gc
IECEx ..... Ex nA IIC T4 Gc
FM, US ..... Cl. I, Div. 2, Gp. A, B, C, D T4 or Cl. I, Zone 2, AEx nA IIC T4
FM, CA ..... Cl. I, Div. 2, Gp. A, B, C, D T4 or Cl. I, Zone 2, Ex nA IIC T4

## Observed authority requirements

EMC ..... 2014/30/EU
LVD ..... 2014/35/EU
RoHS ..... 2011/65/EU
EAC ..... TR-CU 020/2011

## Approvals

ATEX 2014/34/EU ..... KEMA 10ATEX0147 X
IECEx ..... KEM 10.0068X
FM ..... FM17US0004X / FM17CA0003X
DNV-GL Marine ..... Stand. f. Certific. No. 2.4
UL ..... UL 61010-1