stay connected

EMPARRO POWER SUPPLY 1-PHASE,

IN: 100-240VAC OUT: 24-28VDC/20A

INPUT: 90...265 V AC/90...250 V DC
OUTPUT: 24...28 V DC
Current: 20 A

Link to Product

Illustration



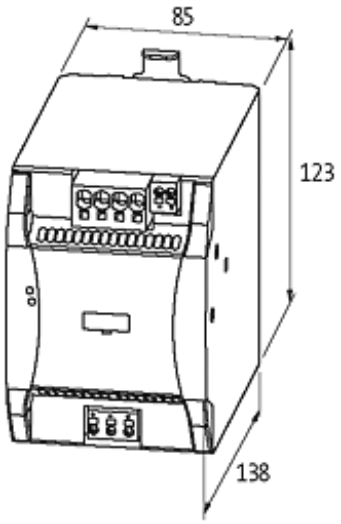

Product may differ from Image

Approvals

The information in this brochure has been compiled with the utmost care.
Liability for the correctness completeness and topicality of the information is restricted to gross negligence. Version: 08/16

MURR ELEKTRONIK
stay connected

Input	
Input voltage	90...265 V AC/90...250 V DC
Input current	5.2 A (100 V AC); 2.2 A (240 V AC)
Inrush current after 1 ms	max. 23 A (230 V AC)
Power factor	0.96 (230 V AC)
Primary fusing external	20 A (T)
Frequency	50...60 Hz
General data	
Standards	EN 60950-1, EN 61204-3, EN 55011 B, EN 61000-3-2, SEMI F47
Relative humidity	5...95 %, no condensation
Efficiency	93.8 % (230 V AC)
Dimensions H × W × D	123×85×138 mm
Mounting method	DIN-rail mountable TH35 (EN 60715)
Temperature range	-25...+60 °C, ...+70 °C derating (storage temperature -40...+80 °C)
Output	
Output voltage	24 V DC (SELV), ±1 %; 24...28 V adjustable
Power Boost	Iout N × 150 % (min. 4 s)
Output current	20 A
Mains failure bridging time	min. 30 ms (230 V AC); 20 A (24 V DC)
Ripple	max. 50 mVrms
Spikes	max. 200 mV p-p
Unit protection	short-circuit and overload protected
LED display	LED (green): OK; LED (red): overload, overheating or short-circuit
Parallel usage/serial usage	max. 5 units/max. 2 units
Commercial data	
country of origin	CZ
customs tariff number	85044090
EAN	4048879402910
eClass	27049002
minimum order quantity	1

The information in this brochure has been compiled with the utmost care.
Liability for the correctness completeness and topicality of the information is restricted to gross negligence. Version: 08/16