WIRING DIAGRAM

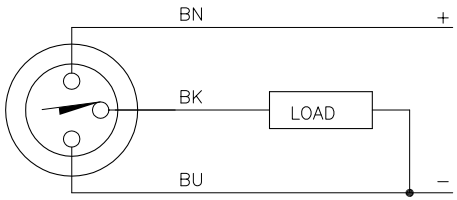

OUTPUT: AP6X

SHORT–CIRCUIT AND OVERLOAD PROTECTED

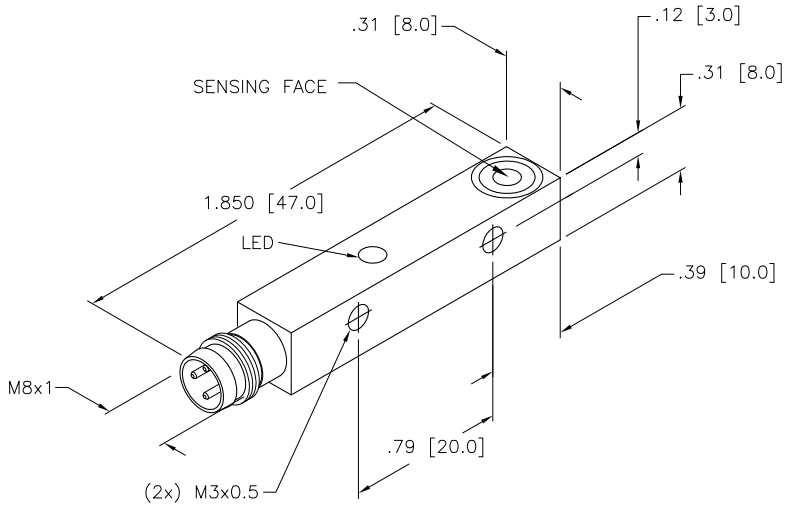

SPECIFICATIONS

RATED OPERATING DISTANCE	4mm = .158"
MOUNTING MODE	FLUSH/NON–FLUSH
TEMPERATURE DRIFT	≤±10% ≤±15%, ≤ –25°C v ≥ +70°C
HYSTERESIS	3–15%
MIN. REPEAT ACCURACY	≤ 2%
OPERATING TEMPERATURE	–30°C to +85°C (–22°F to +185°F)
RATED OPERATIONAL VOLTAGE	10–30 VDC
MAX. RIPPLE	≤10%
RATED OPERATIONAL CURRENT	≤ 150 mA
NO–LOAD CURRENT	≤ 15 mA
MAX. OFF–STATE CURRENT	≤ 0.1 mA
RATED INSULATION VOLTAGE	≤ 0.5 kV
SHORT–CIRCUIT PROTECTED	YES
MAX. VOLTAGE DROP	≤1.8 V
REVERSE POLARITY PROTECTION	YES
WIRE–BREAK PROTECTION	YES
OUTPUT FUNCTION	3–WIRE, NORMALLY OPEN, pnp
MAX. SWITCHING FREQUENCY	≤ 1 kHz
HOUSING MATERIAL	PLASTIC, PP, YELLOW
ACTIVE FACE	PLASTIC, PP, YELLOW
CABLE	ø3.0, LifYY–11Y, TPU, 2 METER LENGTH
SHOCK	30 g, 11 ms
VIBRATION	55 Hz, 1 mm AMPLITUDE (IN ALL 3 PLANES)
DEGREE OF PROTECTION	IP68
SWITCHING STATUS INDICATION	LED; YELLOW

SOURCE DRAWING - FOR REFERENCE ONLY

REV	DESCRIPTION	BY	DATE	ECO NO.
B	DRAWING PROCESSED AS PART OF ECO 33971	CBM	04/06/11	33971

RELATED DOCUMENTS
1.
2.
3.
4.

3RD ANGLE PROJECTION

THIS DRAWING IS PROPERTY OF TURCK INC. USE OF THIS DOCUMENT WITHOUT WRITTEN PERMISSION IS PROHIBITED.

TURCK INC
High Technology Sensors and Automation Controls
3000 CAMPUS DRIVE
MINNEAPOLIS, MN 55441
1–800–544–7769
(763) 553–7300
(763) 553–0708 fax
turck.com

MATERIAL: SEE NOTE

FINISH:

ALL DIMENSIONS DISPLAYED ON THIS DRAWING ARE FOR REFERENCE ONLY

CONTACT TURCK FOR MORE INFORMATION

DRFT: RDS | DATE: 03/02/06
DSGN: EH | SCALE: 1=1.0

UNIT OF MEASUREMENT
INCH [MILLIMETER]
DO NOT SCALE THIS DRAWING

DESCRIPTION: NI 4U–Q8SE–AP6X–V1131

IDENTIFICATION NO.: S4635808 | REV: B

FILE: S4635808 | SHEET 1 OF 1