MN5200

Magnetic sensor

MN-3060-BPKG/0,15M/AS

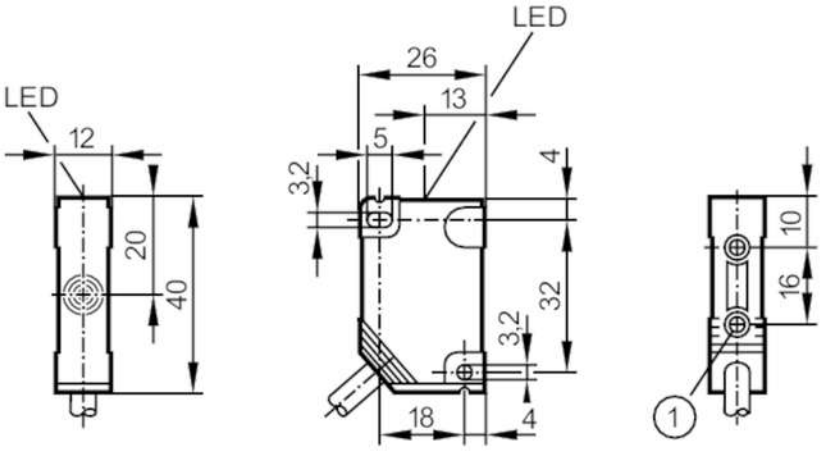

1 threaded bush M3 Depth 5.8 mm
Tightening torque maximum 1.2 Nm screw fixing class 8.8
when brass insert in contact with counterpart

Product characteristics		
Electrical design		PNP
Output function		normally open
Sensing range	[mm]	60; (referred to magnet M 4.0)
Housing		rectangular
Dimensions	[mm]	40 x 12 x 26
Electrical data		
Operating voltage	[V]	10...30 DC
Current consumption	[mA]	< 10
Protection class		III
Reverse polarity protection		yes
Outputs		
Electrical design		PNP
Output function		normally open
Max. voltage drop switching output DC	[V]	2.5
Permanent current rating of switching output DC	[mA]	200
Switching frequency DC	[Hz]	5000
Short-circuit protection		yes
Type of short-circuit protection		pulsed
Overload protection		yes
Detection zone		
Sensing range	[mm]	60; (referred to magnet M 4.0)
Accuracy / deviations		
Hysteresis	[% of Sr]	1...10

MN5200

Magnetic sensor

MN-3060-BPKG/0,15M/AS

Operating conditions			
Ambient temperature	[°C]	-40...75	
Protection		IP 67	
Tests / approvals			
EMC		EN 61000-4-2 ESD	4 kV CD / 8 kV AD
		EN 61000-4-3 HF radiated	10 V/m
		EN 61000-4-4 Burst	2 kV
		EN 61000-4-5 Surge	0,5 kV line to line, Ri: 2 Ohm
		EN 61000-4-6 HF conducted	10 V
		EN 55011	class B
		noise immunity according to DIN ISO 11452-2	100 V/m
MTTF	[years]	1961	
Mechanical data			
Weight	[g]	29	
Housing		rectangular	
Dimensions	[mm]	40 x 12 x 26	
Materials		housing: PBT	
Displays / operating elements			
Display		switching status	1 x LED, yellow
Remarks			
Pack quantity		1 pcs.	

Electrical connection - plug

Cable: 0.15 m, PUR; 3 x 0.34 mm²

Connector: 1 x M8; coding: A; Locking: knurled nut, rotatable

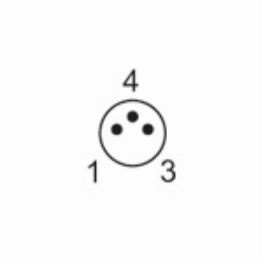

Connection

