Product data sheet
Characteristics

XXS30P8PPM12
Ultrasonic sensor, plastic, cylindrical M30, straight, 8 m, 2 PNP



Main

Range of product	Telemecanique Ultrasonic sensors XX
Sensor type	Ultrasonic sensor
Series name	General purpose
Sensor name	XXS
Sensor design	Cylindrical M30
Detection system	Diffuse Reflex
[Sn] nominal sensing distance	8 M adjustable with teach push-button 8 m software with kit
Material	Plastic
Type of output signal	Discrete
Discrete output function	2 x (1 NO or 1 NC programmable)
Wiring technique	5-wire
Discrete output type	PNP
[Us] rated supply voltage	12...24 V DC with reverse polarity protection
Electrical connection	Male connector M12 5 pins
[Sd] sensing range	0.290…8 m
IP degree of protection	IP65 conforming to IEC 60529 IP67

Complementary

Enclosure material	PBT
Front material	Epoxy Rubber Resin
Thread type	M30 x 1.5
Supply voltage limits	10…30 V DC
Function available	With synchronisation mode Software configurable
[Sa] assured operating distance	0.290…8 m (teach mode)
Blind zone	290 mm
Transmission frequency	75 kHz
Repeat accuracy	0.1 %
Deviation angle from 90° of object to be detected	-4…12 °
Minimum size of detected object	Cylinder diameter 12 mm at 1.8 m
Status LED	Output state: 1 LED (green/yellow) Output state: 1 LED (multi-colour) Echo state: 1 LED (green)
Current consumption	50 mA
Maximum switching current	100 mA with overload and short-circuit protection
Maximum voltage drop	2 V
Switching frequency	<= 2 Hz
Setting-up	Teach mode Configurator software
Maximum delay first up	600 ms
Maximum delay response	300 ms
Maximum delay recovery	300 ms
Marking	CE CULus

The information provided in this documentation contains general descriptions and/or technical characteristics of the performance of the products contained herein.
This documentation is not intended as a substitute for and is not to be used for determining suitability or reliability of these products for specific user applications.
It is the duty of any such user or integrator to perform the appropriate and complete risk analysis, evaluation and testing of the products with respect to the relevant specific application or use thereof.
Neither Schneider Electric Industries SAS nor any of its affiliates or subsidiaries shall be responsible or liable for misuse of the information contained herein.

Threaded length	43.2 mm
Height	30 mm
Width	43.2 mm
Depth	116.3 mm
Net weight	0.14 kg

Environment

Standards	EN/IEC 60947-5-2 CSA C22.2 No 14 UL 508
Product certifications	CULus E2 Ecolab
Ambient air temperature for operation	-25…70 °C
Ambient air temperature for storage	-40…85 °C
Vibration resistance	+/-1 mm conforming to IEC 60068-2-6 (f = 10…55 Hz)
Shock resistance	30 gn in all 3 axes for 11 ms conforming to IEC 60068-2-27
Resistance to electrostatic discharge	8 kV conforming to IEC 61000-4-2
Resistance to electromagnetic fields	10 V/m level 3 conforming to IEC 61000-4-3
Resistance to fast transients	2 kV conforming to IEC 61000-4-4

Packing Units

Unit Type of Package 1	PCE
Number of Units in Package 1	1
Package 1 Weight	204.12 g
Package 1 Height	6.7 cm
Package 1 width	9.5 cm
Package 1 Length	13.3 cm

Offer Sustainability

EU RoHS Directive	Not applicable, out of EU RoHS legal scope
WEEE	The product must be disposed on European Union markets following specific waste collection and never end up in rubbish bins

Contractual warranty

Warranty	18 months

XXS30P8PPM12

Dimensions

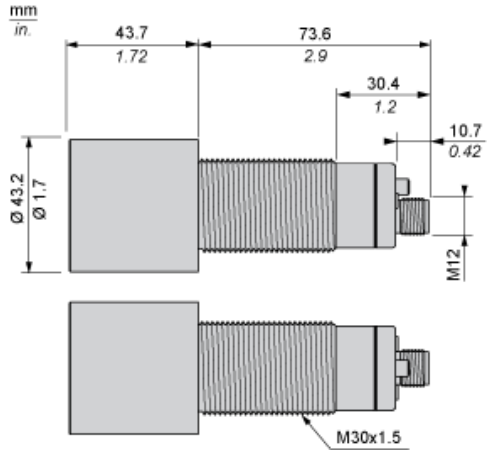

Connections

Connector Wiring

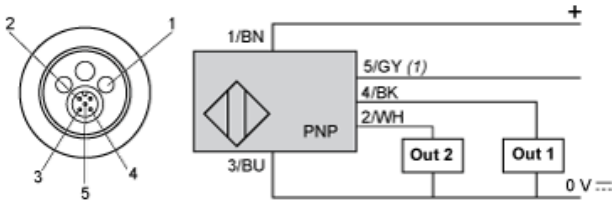

(1) : Synchronization

Pin number	Wire color	Description
1	BN: Brown	+12…24VDC
2	WH: White	Output 2
3	BU: Blue	0 VDC
4	BK: Black	Output 1
5	GY: Grey	Synchronization

Wiring Scheme. Digital Output (NO or NC)

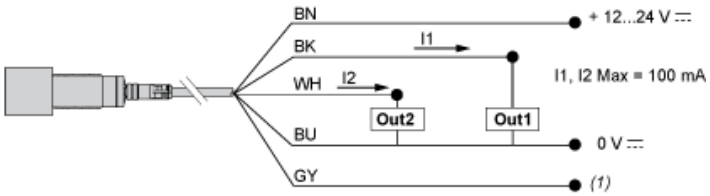

(1) : Synchronization

Wiring for the Synchronization Function (Side by Side Application)

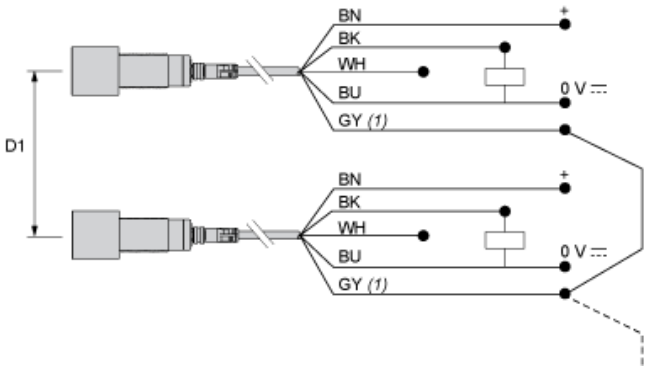

(1) : Synchronization
D1 : 1/8 Sn
BN : Brown
WH : White
BU : Blue
BK : Black
GY : Grey

NOTE: Up to 8 sensors can be synchronized to operate side by side by electrically connecting all pin no.5 (grey) wires together.

To synchronize more than 8 sensors, a PLC output can be used (the pins no.5 must be simultaneously driven by the rising edge of a pulse).

Performance Curves

Detection Curve with 100 x 100 mm / 3.94 x 3.94 inches Square Target

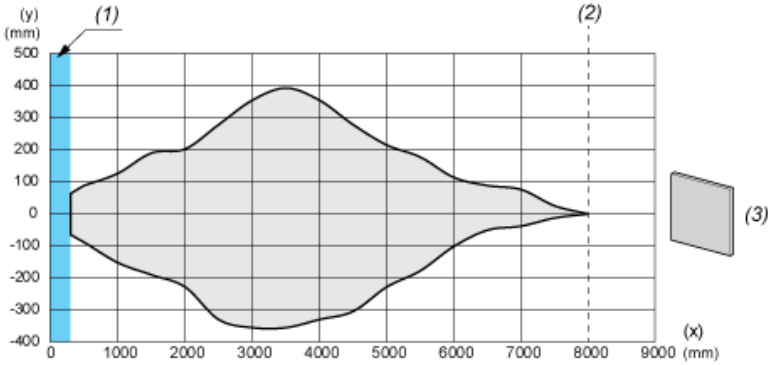

(X) : Target distance
(Y) : Detection limit
(1) : Blind zone: 290 mm / 11.41 inches
(2) : Sn max.
(3) : 100 x 100 mm / 3.94 x 3.94 inches stainless steel plate

Detection Curve with Round Bar

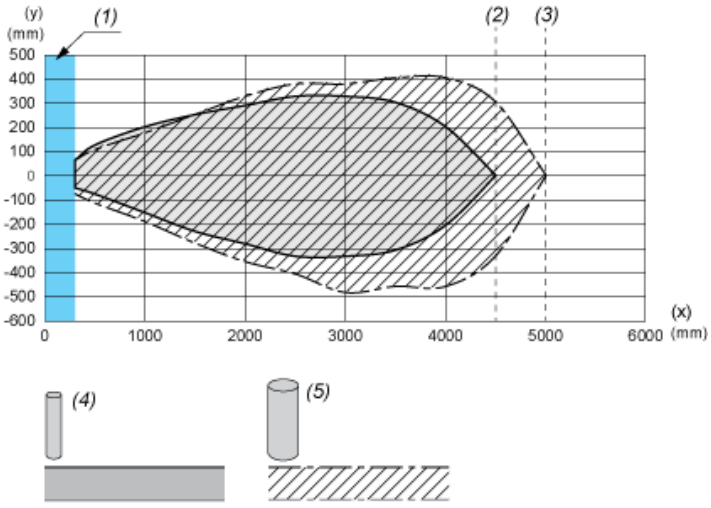

(X) : Target distance
(Y) : Detection limit
(1) : Blind zone: 290 mm / 11.41 inches
(2) : Sn max. with Ø 10 mm / 0.394 inches cylinder
(3) : Sn max. with Ø 25 mm / 0.984 inches cylinder
(4) : Ø 10 mm / 0.394 inches stainless steel cylinder
(5) : Ø 25 mm / 0.984 inches stainless steel cylinder