THE INFORMATION CONTAINED IN THIS DRAWING IS THE SOLE PROPERTY OF L-COM, INC. ANY REPRODUCTION IN PART OR WHOLE WITHOUT THE WRITTEN PERMISSION OF L-COM, INC. IS PROHIBITED.

REVISIONS

REV	DESCRIPTION	DATE	APPROVED
E	ECN 4673: REDRAWN AND NEW FORMAT	4/9/10	D.FRISIELLO
F	ECN 4709: REVISED FERRULE CRIMP SIZE TO .610	4/27/10	D.FRISIELLO
G	ECN 4752: REVISED FREQUENCY RANGE TO 6 GHz	5/19/10	D.FRISIELLO

DESCRIPTION	MATERIAL	FINISH
CENTER PIN	BRASS	GOLD PLATE
OUTER CONTACT	BRASS	NICKEL PLATE
COUPLING NUT	BRASS	NICKEL PLATE
FERRULE	COPPER	NICKEL PLATE
RETAINING RING	PHOSPHOR BRONZE	NICKEL PLATE
GASKET	SILICONE RUBBER	-
INSULATOR	PTFE	-

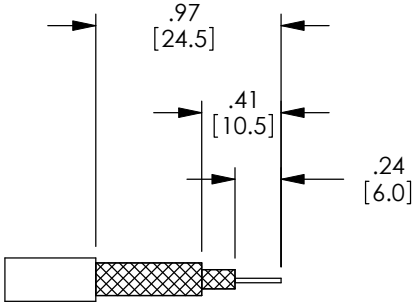

RECOMMENDED
CABLE STRIPPING



FERRULE

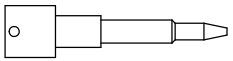

CENTER PIN
(SOLDER TYPE)

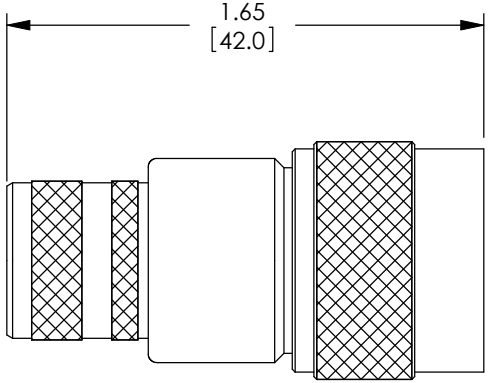

BODY

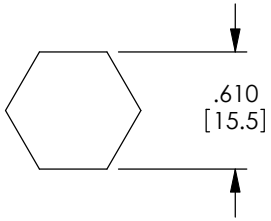

RECOMMENDED
FERRULE CRIMP SIZE

NOTES:

ELECTRICAL:
IMPEDANCE: 50 OHM
FREQUENCY RANGE: DC ~ 6 GHz
VOLTAGE RATING: 1500 VOLTS
DIELECTRIC WITHSTANDING VOLTAGE: 2500 V rms

PACKAGING:
COMPONENT SHALL BE PACKAGED IN QUANTITY OF 10
IN ACCORDANCE WITH L-COM SPECIFICATION PS-0031.

MISCELLANEOUS:
CABLE RETENTION: 80 LBS PULL.
APPLICATION: LMR600, AND EQUIVALENT.
ALL DIMENSIONS ARE FOR REFERENCE ONLY.

RoHS Compliant ✔

UNLESS OTHERWISE SPECIFIED,
DIMENSIONS ARE IN INCHES [mm]
OVERALL CABLE LENGTH TOLERANCE:
≤12 [305] = +1 [25] / -0
>12 [305] ≤60 [1524] = +2 [51] / -0
>60 [1524] ≤120 [3048] = +4 [102] / -0
>120 [3048] ≤300 [7620] = +6 [152] / -0
>300 [7620] = +5% / -0%
ALL OTHER DIMENSIONAL TOLERANCES:
.X = ± .2
.XX = ± .02
.XXX = ±.005
PROJECTION

APPROVALS	DATE
DRAWN BY D.FRISIELLO	4/6/10
CHECKED BY K.BURGNER	4/6/10
APPROVED BY K.BURGNER	4/6/10

CONFIGURATION DETAILS OF UNDIMENSIONED FEATURES MAY VARY

COLOR VARIATIONS MAY OCCUR

L-COM Global Connectivity
45 BEECHWOOD DRIVE
NORTH ANDOVER, MA
01845

CATEGORY
COAXIAL

PRODUCT DESCRIPTION
TYPE N MALE STR CRIMP FOR LMR600

SIZE	FSCM NO.	DWG. NO.	REV.
A	43321	ANM-1610	G

SCALE: NONE | CAD FILE: ANM-1610.SLDDRW | SHEET 1 OF 1