

# 4-pole contactor,20A/AC-1,AC-operated

**Part no.** DILMP20(230V50HZ,240V60HZ)

**Article no.** 276970

## Program

| | | | |
|---|---|---|---|
| Product range | | | Contactors |
| Application | | | Contactors for 4 pole electric consumers |
| Subrange | | | Contactors up to 200 A, 4 pole |
| Connection technique | | | Screw terminals |
| Pole | | | 4 pole |
| Rated operational current | | | |
| AC-1 | | | |
| Conventional free air thermal current, 3 pole, 50 - 60 Hz | | | |
| at 40 °C | $I_{th} = I_e$ | A | 22 |
| at 50 °C | $I_{th} = I_e$ | A | 21 |
| at 60 °C | $I_{th} = I_e$ | A | 20 |
| Contact sequence | | | 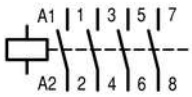 |
| For use with | | | DILM32-XHI(C)…<br>DILA-XHI(V)(C)… |
| Voltage AC/DC | | | AC operation |



**Instructions**Contacts to EN 50012.

## Approbationen

| | |
|---|---|
| Product Standards | IEC/EN 60947-4-1; UL 508; CSA-C22.2 No. 14-05; CE marking |
| UL File No. | E29096 |
| UL CCN | NLDX |
| CSA File No. | 012528 |
| CSA Class No. | 2411-03, 3211-04 |
| NA Certification | UL listed, CSA certified |
| Specially designed for NA | No |

## General

| | | | |
|---|---|---|---|
| Standards | | | IEC/EN 60947, VDE 0660, UL, CSA |
| Lifespan, mechanical | | | |
| AC operated | Operations | x $10^6$ | 10 |
| DC operated | Operations | x $10^6$ | 10 |
| Operating frequency, mechanical | | | |
| AC operated | Operations/h | | 5000 |
| DC operated | Operations/h | | 5000 |
| Climatic proofing | | | Damp heat, constant to IEC 60068-2-78<br>Damp heat, cyclic to IEC 60068-2-30 |
| Ambient temperature | | °C | |
| Open | | °C | - 25 - 60 |
| Enclosed | | °C | - 25 - 40 |
| Storage | | °C | - 40 - 80 |
| Mounting position, AC- and DC operated | | | 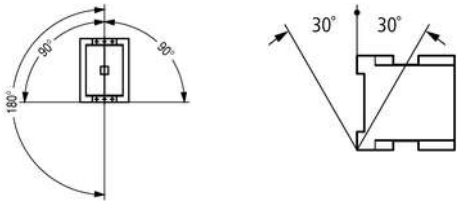 |
| Mechanical shock resistance (IEC/EN 60068-2-27) | | | |

| | | | |
|---|---|---|---|
| Half-sinusoidal shock, 10 ms | | | |
| Main contacts | | | |
| N/O contact | | g | 10 |
| Auxiliary contacts | | | |
| N/O contact | | g | 7 |
| N/C contact | | g | 5 |
| Protection type | | | IP00 |
| Protection against direct contact when actuated from front (EN 90274) | | | Finger- and back-of-hand proof |
| Terminal capacity main cable | | | |
| Solid | | $mm^2$ | 1 x (0.75 - 4)<br>2 x (0.75 - 2.5) |
| Flexible with ferrule | | $mm^2$ | 1 x (0.75 - 2.5)<br>2 x (0.75 - 2.5) |
| Solid or stranded | | AWG | 18 - 14 |
| Terminal capacity control circuit cables | | | |
| Solid | | $mm^2$ | 1 x (0.75 - 4)<br>2 x (0.75 - 2.5) |
| Flexible with ferrule | | $mm^2$ | 1 x (0.75 - 2.5)<br>2 x (0.75 - 2.5) |
| Solid or stranded | | AWG | 18 - 14 |
| Main cable connection screw/bolt | | | M3.5 |
| Tightening torque | | Nm | 1.2 |
| Control circuit cable connection screw/bolt | | | M3.5 |
| Tightening torque | | Nm | 1.2 |
| Tool | | | |
| Main cable | | | |
| Pozidriv screwdriver | | Size | 2 |
| Standard screwdriver | | mm | 0.8 x 5.5<br>1 x 6 |
| Control circuit cables | | | |
| Pozidriv screwdriver | | Size | 2 |
| Standard screwdriver | | mm | 0.8 x 5.5<br>1 x 6 |

## Main conducting paths

| | | | |
|---|---|---|---|
| Rated impulse withstand voltage | $U_{imp}$ | V AC | 8000 |
| Overvoltage category/pollution degree | | | III/3 |
| Rated insulation voltage | $U_i$ | V AC | 690 |
| Rated operational voltage | $U_e$ | V AC | 690 |
| Safe isolation to VDE 0106 Part 101 and Part 101/A1 | | | |
| between coil and contacts | | V AC | 400 |
| between the contacts | | V AC | 400 |
| Making capacity (p.f. to IEC/EN 60947) | | | |
| | Up to 690 V | A | 144 |
| Breaking capacity | | | |
| 220/230 V | | A | 120 |
| 380/400 V | | A | 120 |
| 500 V | | A | 100 |
| 660/690 V | | A | 70 |
| Short-circuit rating | | | |
| Short-circuit protection maximum fuse | | | |
| Type “2” coordination | | | |
| 400 V | gG/gL 500 V | A | 20 |
| 690 V | gG/gL 690 V | A | 20 |

| | | | |
|---|---|---|---|
| Type “1” coordination | | | |
| 400 V | gG/gL 500 V | A | 35 |
| 690 V | gG/gL 690 V | A | 25 |

## AC

| | | | |
|---|---|---|---|
| AC-1 duty | | | |
| Rated operational current | | | |
| Conventional free air thermal current, 3 pole, 50 - 60 Hz | | | |
| Open | | | |
| at 40 °C | $I_{th} = I_e$ | A | 22 |
| at 50 °C | $I_{th} = I_e$ | A | 21 |
| at 60 °C | $I_{th} = I_e$ | A | 20 |
| enclosed | $I_{th}$ | A | 18 |
| Conventional free air thermal current, 1 pole | | | |
| open | $I_{th}$ | A | 60 |
| enclosed | $I_{th}$ | A | 54 |
| Motor rating | P | kWh | |
| Motor rating AC-1 230 V | | kW | 8 |
| Motor rating AC-1 240 V | | kW | 9 |
| Motor rating AC-1 380/400 V | | kW | 14 |
| Motor rating AC-1 415 V | | kW | 15 |
| Motor rating AC-1 440 V | | kW | 16 |
| Motor rating AC-1 500 V | | kW | 18 |
| Motor rating AC-1 690 V | | kW | 24 |
| AC-3 duty | | | |
| Rated operational current AC-3 open, 50 - 60 Hz, 3 pole | $I_e$ | | |
| 220/230 V | $I_e$ | A | 12 |
| 240 V | $I_e$ | A | 12 |
| 380/400 V | $I_e$ | A | 12 |
| 415 V | $I_e$ | A | 12 |
| 440V | $I_e$ | A | 12 |
| 500 V | $I_e$ | A | 10 |
| 660/690 V | $I_e$ | A | 7 |
| Motor rating | P | kWh | |
| 220/230 V | P | kW | 3.5 |
| 240V | P | kW | 4 |
| 380/400 V | P | kW | 5.5 |
| 415 V | P | kW | 7 |
| 440 V | P | kW | 7.5 |
| 500 V | P | kW | 7 |
| 660/690 V | P | kW | 6.5 |

## DC

| | | | |
|---|---|---|---|
| Rated operational current, open | | | |
| DC-1 operation | | | |
| 60 V | $I_e$ | A | 22 |
| 110 V | $I_e$ | A | 22 |
| 220 V | $I_e$ | A | 6 |
| 440 V | $I_e$ | A | 1.3 |
| DC-3 operation | | | |
| 60 V | $I_e$ | A | 20 |
| 110 V | $I_e$ | A | 20 |
| 220 V | $I_e$ | A | 1.5 |
| 440 V | $I_e$ | A | 0.2 |
| DC-5 operation | | | |

| | | | |
|---|---|---|---|
| 60 V | $I_e$ | A | 20 |
| 110 V | $I_e$ | A | 20 |
| 220 V | $I_e$ | A | 1.5 |
| 440 V | $I_e$ | A | 0.2 |

## Current heat loss (3 pole)

| | | | |
|---|---|---|---|
| Current heat loss at $I_{th}$ | | W | 4.7 |
| Impedance per pole | | mΩ | 2.5 |

## Magnet systems

| | | | |
|---|---|---|---|
| Voltage tolerance | | x $U_c$ | |
| AC operated 50 Hz | Pick-up | x $U_c$ | 0.8 - 1.1 |
| AC operated 50/60 Hz | | x $U_c$ | 0.8 - 1.1 |
| Drop-out voltage AC operated | Drop-out | x $U_c$ | 0.3 - 0.6 |
| DC operated | Pick-up | x $U_c$ | 0.7 - 1.2 |
| DC operated | Drop-out | x $U_c$ | 0.15 - 0.6 |
| Power consumption of the coil in a cold state and 1.0 x $U_c$ | | | |
| AC operated 50/60 Hz | Pick-up | VA | 24 |
| AC operated 50/60 Hz | Pick-up | W | 19 |
| AC operated 50/60 Hz | Sealing | VA | 4 |
| AC operated 50/60 Hz | Sealing | W | 1.2 |
| DC operated | Pick-up | W | 4,5 |
| DC operated | Sealing | W | 4,5 |
| Duty factor | | % DF | 100 |
| Switching times at 100 % $U_c$ (approximate values) | | | |
| Main contacts | | | |
| AC operated | | | |
| Closing delay | | ms | 15 - 21 |
| Opening delay | | ms | 9 - 18 |
| DC operated | | ms | |
| Closing delay | | ms | 31 |
| Opening delay | | ms | 12 |
| Arcing time | | ms | 10 |
| Permissible residual current with actuation of A1 - A2 by the electronics (with 0 signal). | | mA | ≤ 1 |

## Notes

At least double-pulse bridge rectifier

## Technical data according to ETIM 4.0

| | | | |
|---|---|---|---|
| Number of main contacts as N/Os | | | 4 |
| Rated operation current Ie at AC-1, 400 V | | | 22 |
| Connection type main circuit | | | Screw connection |
| Rated control voltage Us at AC 60HZ | | V | 240 |
| Number of auxiliary contacts as N/Os | | | 0 |
| Rated control voltage Us at AC 50HZ | | V | 230 |
| Number of auxiliary contacts as N/Cs | | | 0 |
| Suitable for rail-mounting | | | No |
| Rated control voltage Us at DC | | V | 0 |
| Voltage type for actuation | | | AC |
| Rated operation current Ie at AC-3, 400 V | | A | 12 |
| Number of N/Cs as main contact | | | 0 |
| Motor rating at AC-3, 400 V | | kWh | 5.5 |

## Characteristics

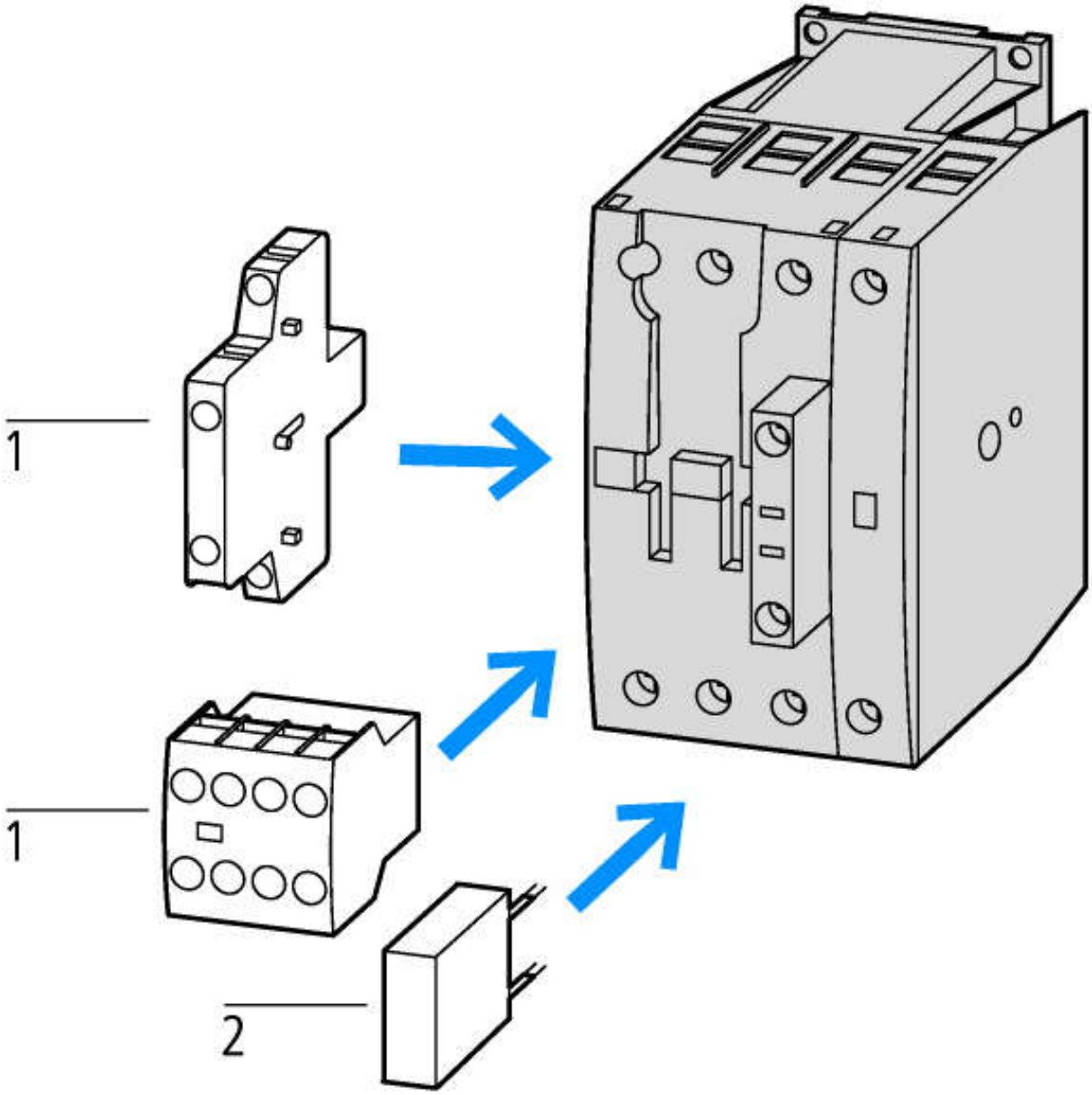


1: Auxiliary contact module
2: Suppressor

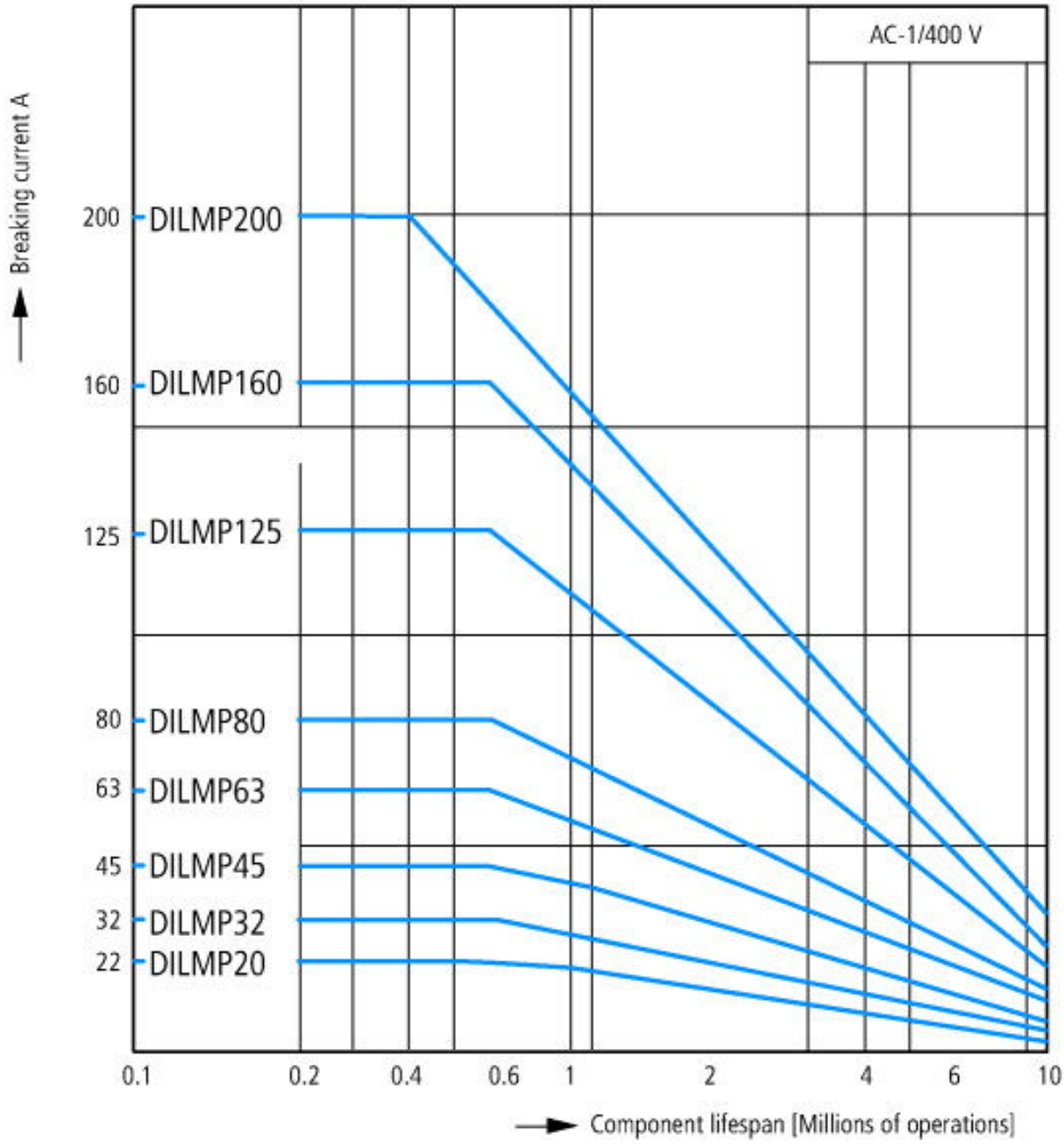


Operating characteristics
Non inductive and slightly inductive loads
Electrical characteristics
Switch on: 1 × rated operational current
Switch off: 1 × rated operational current
Utilization category
100 % AC-1
Typical examples of application
Electric heat

## CAD-Data

| | |
|---|---|
| Product standards CAD data: | http://eaton-moeller.partcommunity.com/PARTcommunity/Portal/eaton-moeller |

## Dimensions

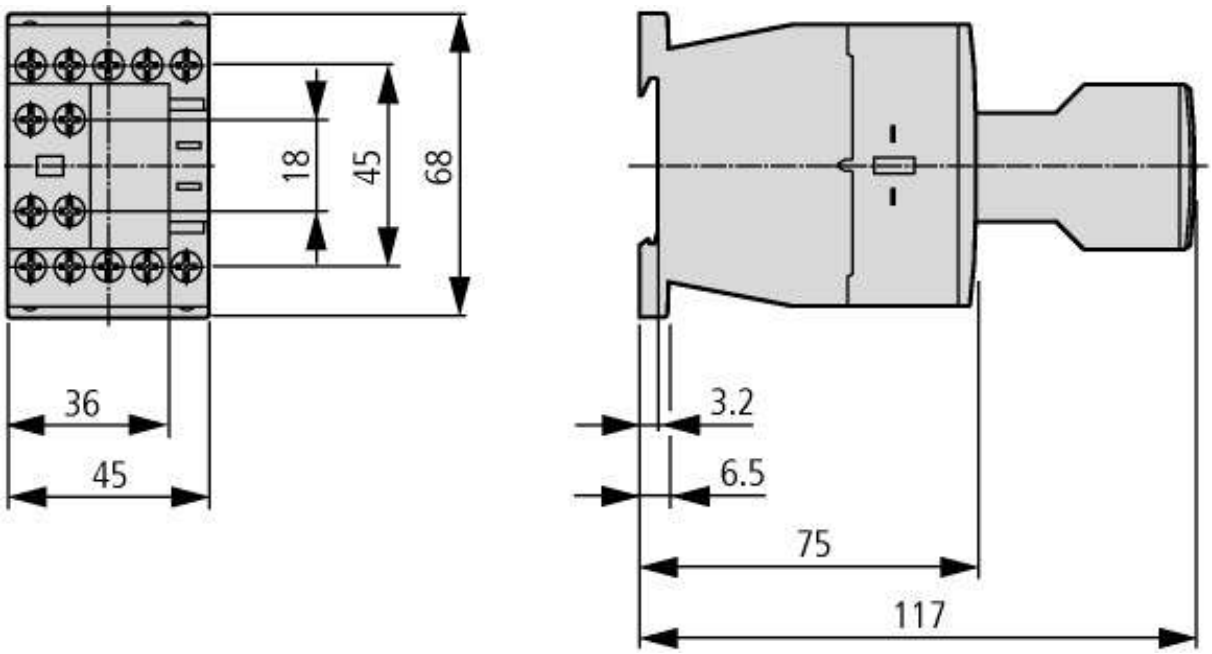


Contactor with auxiliary contact module

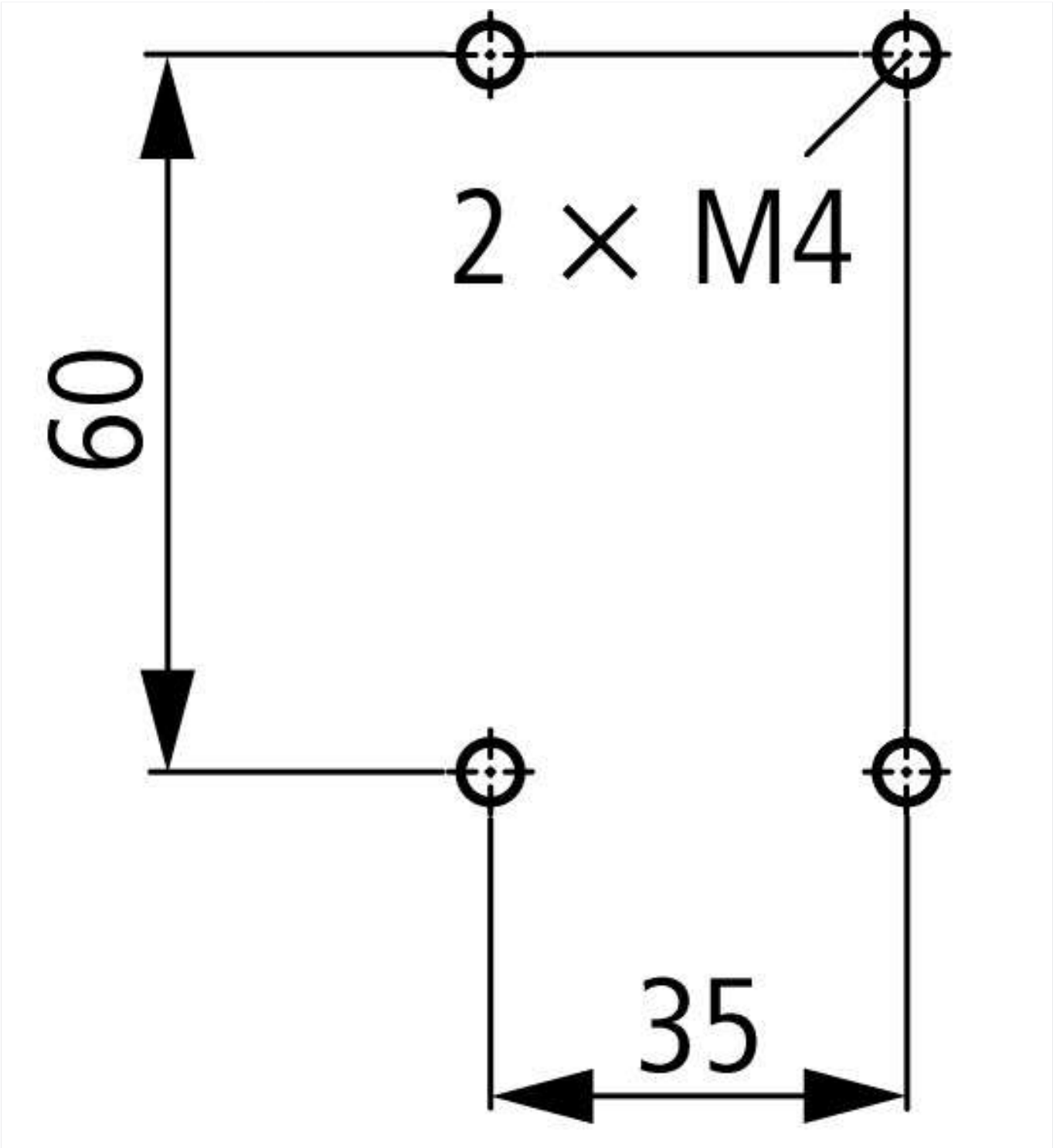


DILMP20

## Additional product information (links)

| | |
|---|---|
| AWA2100-2126 Contactors | ftp://ftp.moeller.net/DOCUMENTATION/AWA_INSTRUCTIONS/21261207.pdf |
| Installation Instructions | http://www.moeller.net/en/support/instructions_awa.jsp |
| Documentation | http://www.moeller.net/en/support/index.jsp |
| Motor starters and "Special Purpose Ratings" for the North American market | http://www.moeller.net/binary/ver_techpapers/ver953en.pdf |
| Busbar Component Adapters for modern Industrial control panels | http://www.moeller.net/binary/ver_techpapers/ver960en.pdf |
| The Interaction of Contactors with PLCs | http://www.moeller.net/binary/ver_techpapers/ver957en.pdf |
| Standard Compliant and Functionally Safe Engineering Design with Mechanical Auxiliary Contacts | http://www.moeller.net/binary/ver_techpapers/ver956en.pdf |
| Switchgear for Luminaires | http://www.moeller.net/binary/ver_techpapers/ver955en.pdf |
| Effect of the Cabel Capacitance of Long Control Cables on the Actuation of Contactors | http://www.moeller.net/binary/ver_techpapers/ver949en.pdf |
| X-Start - Modern Switching Installations Efficiently Fitted and Wired Securely | http://www.moeller.net/binary/ver_techpapers/ver938en.pdf |
| Mirror Contacts for Highly-Reliable Information Relating to Safety-Related Control Functions | http://www.moeller.net/binary/ver_techpapers/ver944en.pdf |

| | |
|---|---|
| X-Start - New Generation:100 years of Moeler contactors - Continous Progress- | http://www.moeller.net/binary/ver_techpapers/ver937en.pdf |
| Switchgear of Power Factor Correction Systems | http://www.moeller.net/binary/ver_techpapers/ver934en.pdf |


© 07/2011 by Eaton Industries GmbH