E30430

IO-Link display

IO-LINK INLINE DISPLAY 1,44"

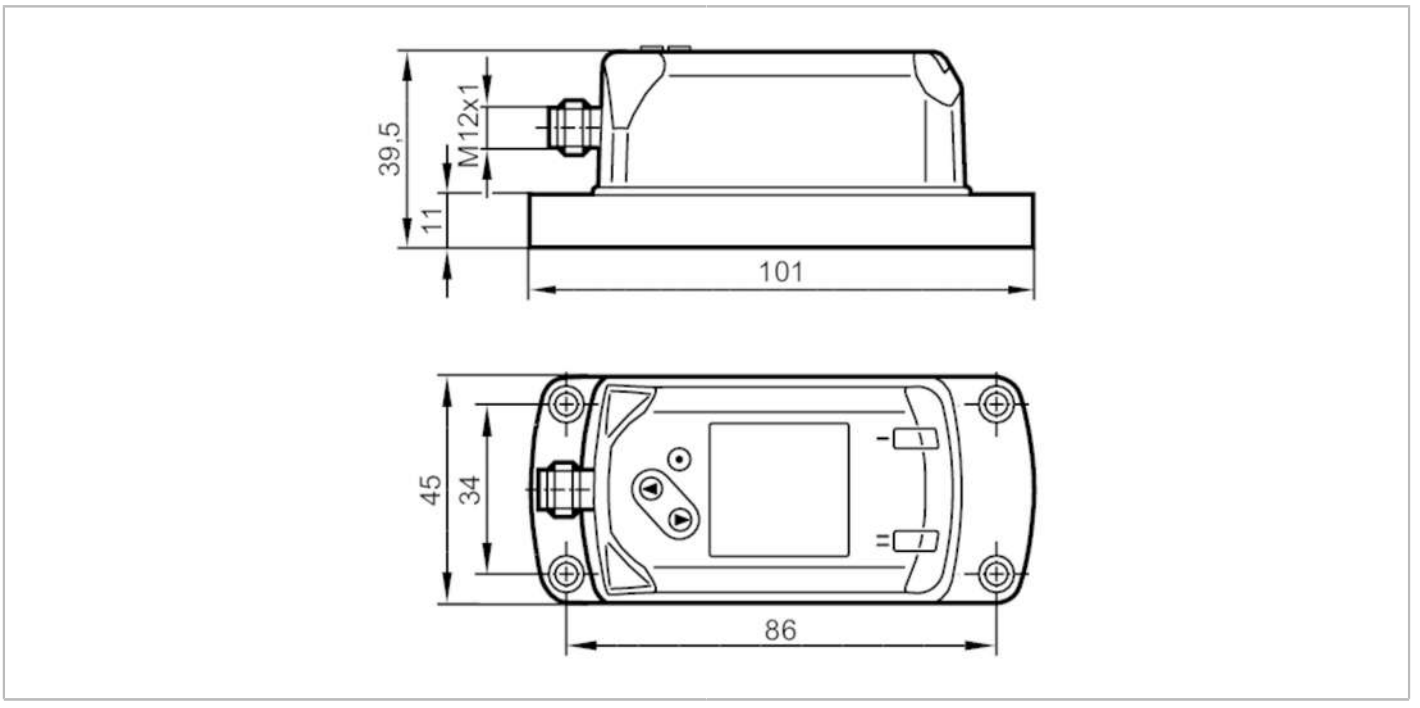

Application			
Special feature		Gold-plated contacts	
Application		display of all process values of a connected sensor	
Electrical data			
Operating voltage	[V]	18...30 DC	
Current consumption	[mA]	< 47	
Min. insulation resistance	[MΩ]	100; (500 V DC)	
Protection class		III	
Reverse polarity protection		yes	
Software / programming			
Parameter setting options		display, indication	
Interfaces			
Communication interface		IO-Link	
Transmission type		COM2 (38,4 kBaud)	
IO-Link revision		1.1	
SDCI standard		IEC 61131-9	
Profiles		Smart Sensor - SSP 0	Generic Profiled Sensor
		Function	Device identification
		Function	Process data variable
		Function	Device diagnosis
SIO mode		no	
Required master port type		A	
Min. process cycle time	[ms]	11.2	
Supported DeviceIDs		**Type of operation**	**DeviceID**
		default	694

E30430

IO-Link display

IO-LINK INLINE DISPLAY 1,44"

Operating conditions			
Ambient temperature	[°C]	-10...60	
Storage temperature	[°C]	-20...80	
Protection		IP 65; IP 67	
Tests / approvals			
EMC		DIN EN 61000-6-2	
		DIN EN 61000-6-4	
Shock resistance		DIN EN 60068-2-27	5 g (11 ms)
Vibration resistance		DIN EN 60068-2-6	5 g (10...50 Hz)
MTTF	[years]	397	
Mechanical data			
Weight	[g]	204	
Housing		rectangular	
Dimensions	[mm]	86 x 45 x 39.5	
Materials		stainless steel (316L/1.4404); PC; PBT-GF30; PPS; FKM	
Displays / operating elements			
Display			colour display 1,44", 128 x 128 pixels
			2 x LED, yellow
Accessories			
Items supplied		Y-splitters:, E12481	
Remarks			
Pack quantity		1 pcs.	
Electrical connection			
Connector: 1 x M12; Contacts: gold-plated			