Brand of NTN corporation

Technical data

USFCE212

Bearing units



Grey cast housing, radial insert ball bearing with socket set screws, single lip seal

KIT CONTENT

US212G2, FCE212

VISUAL (S)

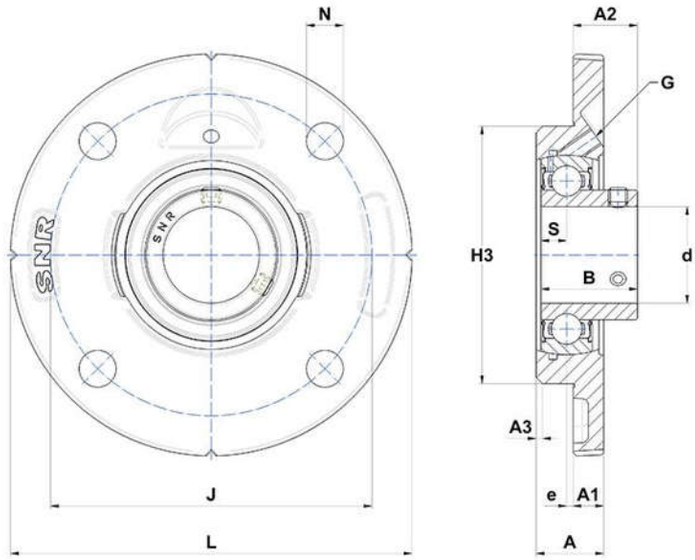

PRODUCT DEFINITION

Brand	SNR
A - Housing height	30,5 mm
A1 - Housing foot height / flange height	16 mm
A2 - Total height from mounting surface	37,8 mm
A3 - Centering depth / chamfer dimension	3 mm
B - Width of Inner Ring	53,7 mm

USFCE212
Bearing units

PRODUCT DEFINITION	
d - Shaft diameter	60 mm
e - Distance mounting surface to bearing center	-1 mm
G - Grease fitting	R1/8"
H3 - Centering dia	135 mm
J - Mounting holes distance	160 mm
L - Housing width / diameter	195 mm
N - Mounting hole dimension	18 mm
S - Distance front side/bearing centre	14,9 mm

PRODUCT PERFORMANCE	
C - Dynamic load rating	52500000 mN
C0 - Static load rating	32800000 mN
Operating temperature min.	253,15 °K
Operating temperature max.	373,15 °K

OTHER FEATURES	
Mass	3,63 kg
Recommended tightening torque for set screw	22 N-m