AVENTICS™ Mini Spool Valves

3 way, Solenoid Air Operated, Plastic Body
1/8" Tapped or 6 mm O.D. instant fitting, adaptable on multiple subbases

3/2
Series
520

General

Operating pressure	1.5 to 8 bar
Ambient temperature range	+5°C to +50°C
Orifice size	519: 2.5 mm; 520: 4 mm; 521: 6 mm
Flow (Qv at 6 bar)	400 l/min (ANR) - Kv: 5.7
Response time	15 ms (energized) ; 45 ms (de-energized)

fluids (∗)	temperature range (TS)	materials (∗)
air or inert gas filtered at 50 µm, lubricated or not	+5°C to +50°C	NBR (nitrile)



Materials in contact with fluid

(∗) Ensure that the compatibility of the fluids in contact with the materials is verified

Body	POM (polyacetal)
Cover	POM (polyacetal)
Internal parts	POM (polyacetal) and brass
Seals	NBR

Electrical characteristics

Coil insulation class	F
Connector	Spade plug (cable Ø 4-6 mm)
Connector specification	EN 175301-803, industry standard form C (9.4 mm)
Electrical safety	IEC 335
Electrical enclosure protection	Moulded IP65 (EN 60529)
Standard voltages	DC (=) : 24V
(Other voltages and frequencies on request)	AC (~) : 24V/50-60 Hz - 115V/50-60 Hz 230V/50-60 Hz

operator ambient temperature range (TS)	power ratings			replacement coil			Type
	holding ~		hot/cold =	~		=	
°C (°F)	(VA)	(W)	(W)	-	-	-	
+5 to +50	2	1.5	1.6	-	-	-	01

(∗) Ensure that the compatibility of the fluids in contact with the materials is verified.

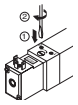

Specifications

function symbol		operators: pilot	operators: return	connection: port 2	connection: ports 1-3	voltages	Catalog number with manual operator (maintained/impulse)
3/2 NC	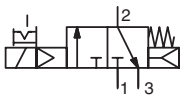	solenoid air	mechanical & air spring	instant fitting 6 mm O.D.	instant fitting 6 mm O.D.	24V ~	**52000214**
						115V ~	**52000215**
						230V ~	**52000216**
						24V =	**52000213**
					subbase mounted	24V ~	**52000210**
						115V ~	**52000211**
						230V ~	**52000212**
						24V =	**52000209**
				G 1/8" tapped	G 1/8" tapped	24V ~	**52000194**
						115V ~	**52000195**
						230V ~	**52000196**
						24V =	**52000193**
					subbase mounted	24V ~	**52000190**
						115V ~	**52000191**
						230V ~	**52000192**
						24V =	**52000189**

00438GB-2021/R01
Availability, design and specifications are subject to change without notice. All rights reserved.

Accessories

- Visual indicator (LED) and electrical protection: 24 V DC/AC, Catalog number **88130401**; 115 V AC, Catalog number **88130402**; 230 V AC, Catalog number **88130403**
- Non rotatable connector with cable, 2 m length:
  - without LED indicator, Catalog number **88143567**
  - with integrated LED indicator and electrical protection, Catalog number **88143580**
- Flange for ports 2 - 4 with instant fittings for flexible tube 6 mm O.D. (series 520): Catalog number **88135532**
- Adaptable on light alloy multiple subbases (fixing screws and seals are supplied with subbases)

Installation

- The spool valves can be mounted in any position without affecting operation
- Spool valves have 2 mounting holes in body
- Thread connection “G” applicable for 1/8, have standard thread according to ISO 228/1
- Multi language installation/maintenance instructions are included with each spool valve

Dimensions (mm), **Weight** (kg)

Connection with instant fitting
weight: 0.102

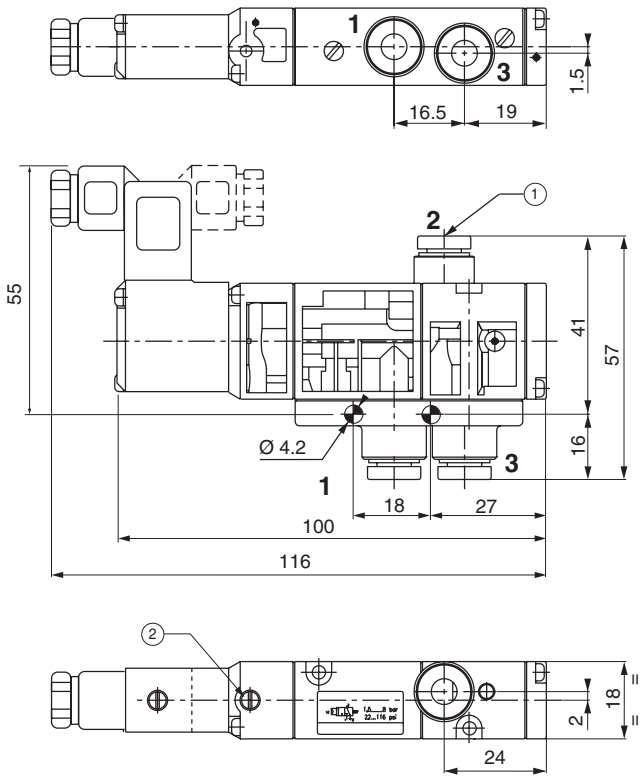

① 3 instant fittings 6 mm O.D. tube
② Manual operator location

00438GB-2021/R01
Availability, design and specifications are subject to change without notice. All rights reserved.

Dimensions (mm), **Weight** (kg)

G 1/8 tapped
weight: 0.094

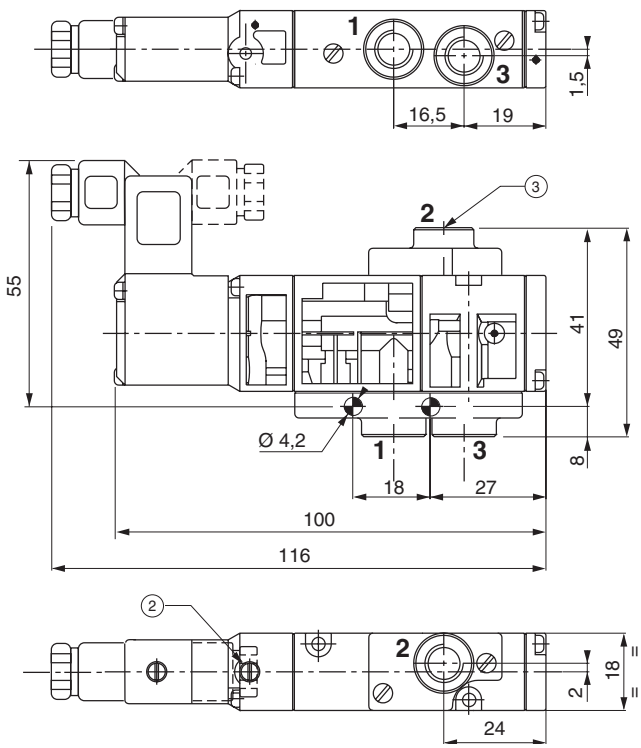

(2) Manual operator location
(3) 3 ports, G 1/8 tapped

Dimensions (mm), **Weight** (kg)

Gang-mounting rail version (multiple subbases)
weight: 0.086

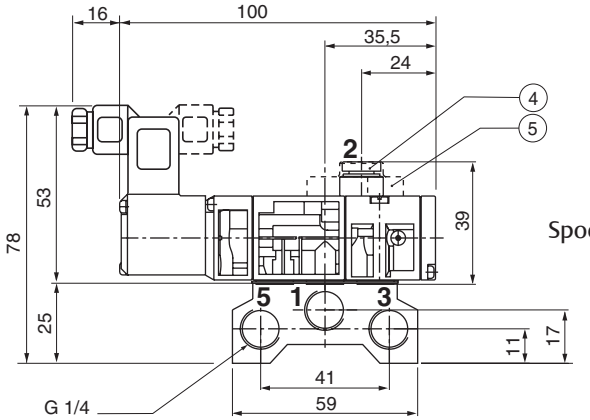

Spool valves: Ports 1-3-5 with smooth holes.

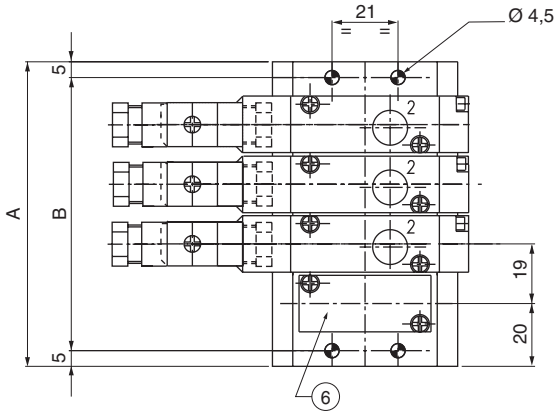

4 With instant fitting connection
5 Tapped connection
6 Blanking plate for base

number of spool valves	A	B	weight (1)
2	59	49	0.145
3	78	68	0.195
4	97	87	0.240
5	116	106	0.290
6	135	125	0.340
7	154	144	0.385
8	173	163	0.435
9	192	182	0.485
10	211	201	0.530

(1) Subbases only.