EVCA08

Connection cable

VDOGH050MSE00,2C05STGH050MSS

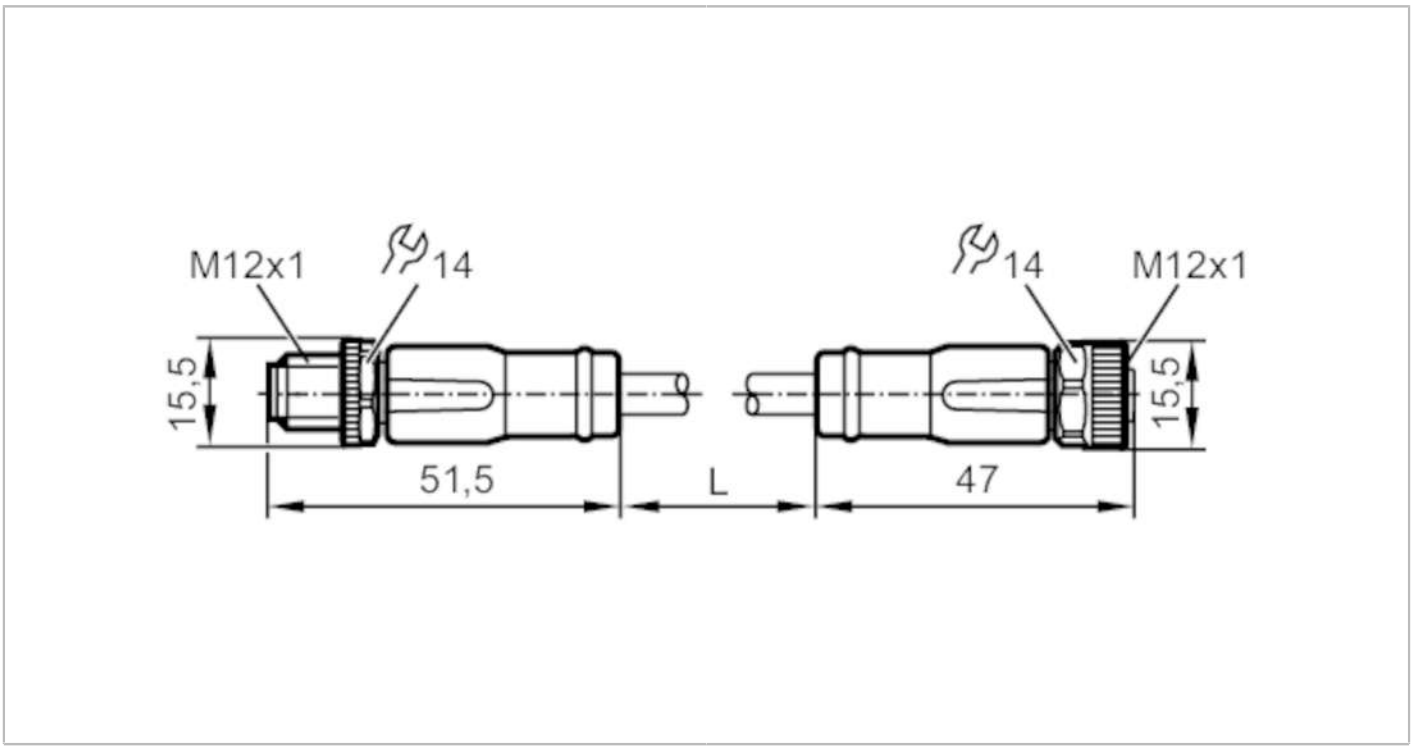

Application			
Special feature		Halogen-free; Gold-plated contacts; Screened cable; Drag chain suitability	
Application		CAN bus	
Electrical data			
Operating voltage	[V]	32 DC; (wires 4+5: 5 V)	
Max. current load total	[A]	4; (wires 4+5: 0,05 A)	
Operating conditions			
Ambient temperature	[°C]	-25...80	
Protection		IP 67; IP 68; IP 69K	
Mechanical data			
Weight	[g]	59.7	
Moulded-body material		TPU	
Material nut		brass, nickel-plated	
Sealing material		FKM	
Drag chain suitability		yes	
Drag chain suitability		bending radius for flexible use	min. 10 x cable diameter
		travel speed	max. 3.3 m/s for a horizontal travel length of 5 m and max. acceleration of 5 m/s²
		bending cycles	> 5 Mio.
		torsional strain	± 180 °/m
Remarks			
Remarks		The CAN bus terminating resistor (120 Ω) is integrated in the M12 connector.	
Pack quantity		1 pcs.	

EVCA08

Connection cable

VDOGH050MSE00,2C05STGH050MSS

Electrical connection - plug

Connector: 1 x M12, straight; coding: A; Moulded body: TPU, black; Locking: brass, nickel-plated; Contacts: gold-plated; Tightening torque: 0.6...1.5 Nm

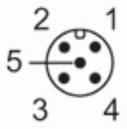

Electrical connection

Cable: 0.2 m, PUR, Halogen-free, lilac, Ø 8.4 mm, shielded; RD / BK: 2 x 0.75 mm² (42 x Ø 0.15 mm) + WH / BU: 2 x 0.5 mm² (19 x Ø 0.19 mm) + screen: 1 x 0.75 mm² (42 x Ø 0.15 mm)

Connection

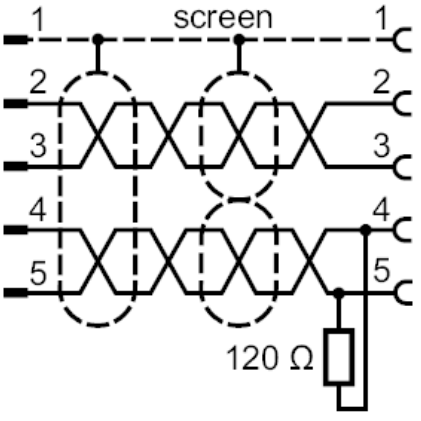

Electrical connection - socket

Connector: 1 x M12, straight; coding: A; Moulded body: TPU, black; Locking: brass, nickel-plated; Sealing: FKM; Contacts: gold-plated; Tightening torque: 0.6...1.5 Nm

