Enclosure series technoPLUS

Type: TP 132

Material-No.: 290.132.000

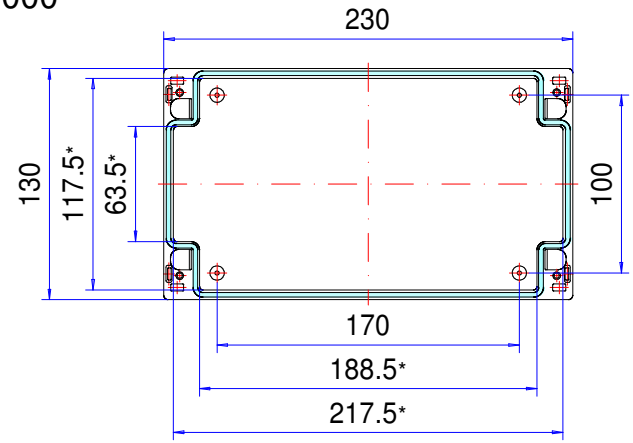

Folie/ Keypad
121.4 $^{+0}_{-0.2}$ x 192.6 $^{+0}_{-0.2}$

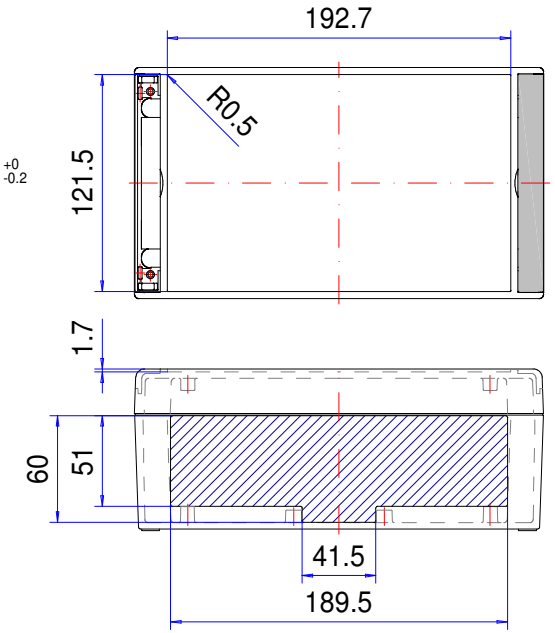

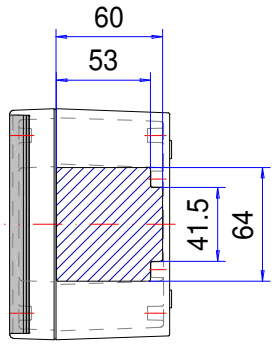

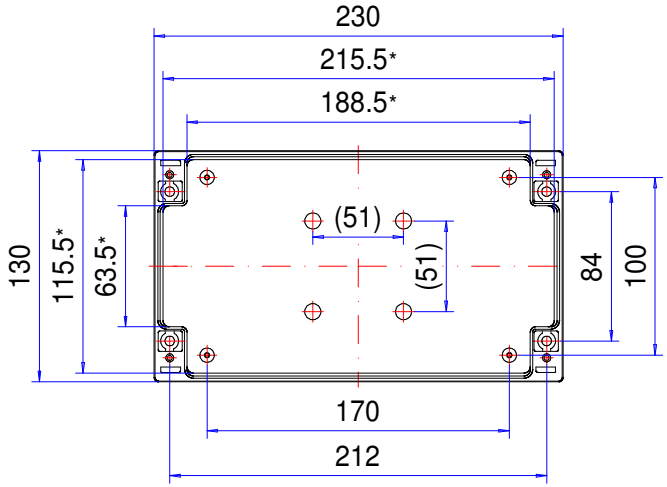

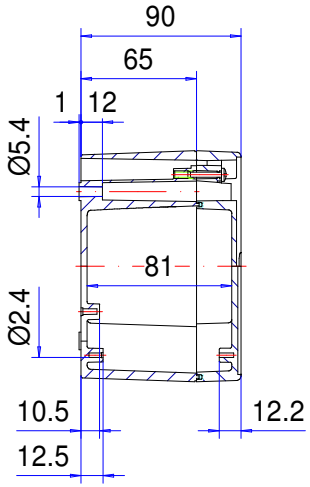

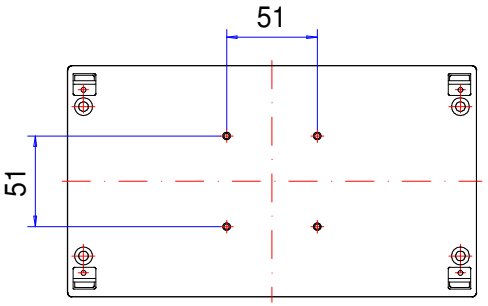

* Please note: Mould slope for casting ejection, dimensions in the amount of the bottom!

Enclosure material	LURAN S 778T UV, RAL 7044, silk grey		Weight	580 g
Lid screws	4x 1.4567 (V2A), captive		Assembly screws	4x KBL Ø3x6,0, galvanized steel
Gasket	1x moulded gasket, silicone, transparent		Design covers	2x Polypropylen (PP), RAL 7030, stone grey
Ingress protection	IP67 EN 60529		Tolerance	DIN ISO 16901-130 (outside dimensions ±0.5mm)