Brand of NTN corporation

Technical data

USPFL204

Bearing units



Sheet metal housing, radial insert ball bearing with socket set screws, single lip seal

KIT CONTENT

US204G2, PFL204

VISUAL (S)

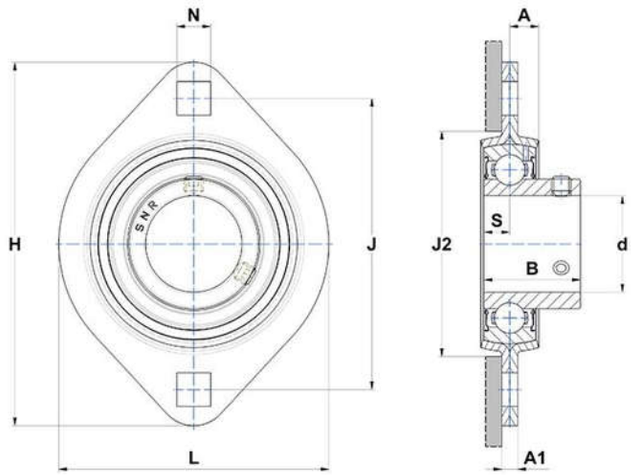

PRODUCT DEFINITION

Brand	SNR
A - Housing height	7,7 mm
A1 - Housing foot height / flange height	4,5 mm
A2 - Total height from mounting surface	20 mm
B - Width of Inner Ring	25 mm
d - Shaft diameter	20 mm

PRODUCT DEFINITION	
e - Distance mounting surface to bearing center	2 mm
H - Housing length, width or diameter	91 mm
J - Mounting holes distance	71,5 mm
L - Housing width / diameter	68 mm
N - Mounting hole dimension	9 mm
S - Distance front side/bearing centre	7 mm

PRODUCT PERFORMANCE	
C - Dynamic load rating	12800000 mN
C0 - Static load rating	6650000 mN
Operating temperature min.	253,15 °K
Operating temperature max.	373,15 °K

OTHER FEATURES	
Mass	0,22 kg
Recommended tightening torque for set screw	5.5 N-m