Ventilation duct sensor for CO_2 and temperature Model A2G-85

Applications

- For measuring CO_2 and the temperature in ventilation ducts

Special features

- Electrical output signal DC 0 … 10 V, 4 … 20 mA or Modbus®
- Simple installation
- Compact and robust design
- Maintenance-free



Ventilation duct sensor, model A2G-85, without LC display

Description

The model A2G-85 ventilation duct sensor with an integrated temperature measurement is suitable for direct mounting on circular ventilation pipes or rectangular ventilation ducts.

The A2G-85 is a high-quality product solution for ventilation and air-conditioning applications. This ventilation duct sensor measures carbon dioxide (CO_2) in accordance with the NDIR measuring principle, and in addition also temperature. Due to the combination of these two measurement parameters in one single instrument, the material and mounting cost is considerably reduced.

The adjustable mounting flange enables a quick installation. The illuminated LC display provides good readability, even from a distance. The screwless cover enables fast wiring and commissioning.

The measurement of the CO_2 and the air temperature as the basis of demand-orientated control/regulation is gaining ever more importance in the ventilation and air-conditioning industry. The sensor signals for both measurement parameters are transmitted to the control/regulation or building automation with analogue output signals (0 ... 10 V, 4 … 20 mA) or digital Modbus® protocol.

WIKA
Part of your business

Specifications

Ventilation duct sensor for CO_2 and temperature, model A2G-85	
Version	■ Version without LC display ■ Version with LC display
Measuring range	
CO_2	400 … 2,000 ppm
Temperature	0 … 50 °C [32 … 122 °F]
Accuracy	
CO_2	±40 ppm +2 % of reading value
Temperature	< 0.5 °C [0.9 °F]
Power supply U_B	AC 24 V or DC 24 V ±10 %
Power consumption	Max. 230 mA
Electrical connection	Cable gland M16 Screw terminals Max. 1,5 mm^2
Output signal	■ DC 0 ... 10 V, load min. 1 kΩ ■ 4 … 20 mA, load R min. 20 Ω, max. 500 Ω ■ Modbus®
Material	
Case	Plastic (ABS)
Cover	Polycarbonate
Sensor sleeve	Plastic (ABS)
Mounting flange	LLPDP
Permissible temperatures	
Operating	0 … 50 °C [32 … 122 °F] (at sensor)
Ambient	-20 … +70 °C [-4 … +158 °F]
Relative humidity	0 ... 95 %, non-condensing
Ingress protection per IEC/EN 60529	IP54
Weight	150 g
Mounting	By means of adjustable mounting flange

Modbus® version

Modbus® communication	
Protocol	Modbus® via serial interface
Transfer mode	RTU
Interface	RS-485
Byte format	(11 bits) in RTU mode Coding system: 8 bits binary Bits per byte: - 1 start bit - 8 data bits, least significant bit is sent first - 1 bit for parity - 1 stop bit
Baud rate	9,600, 19,200, 38,400 - adjustable in the configuration
Modbus® addresses	1 … 247 addresses - adjustable in the configuration

Electrical connection

Output signal DC 0 … 10 V

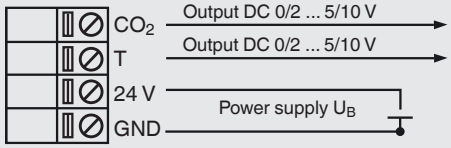

Output signal 4 … 20 mA

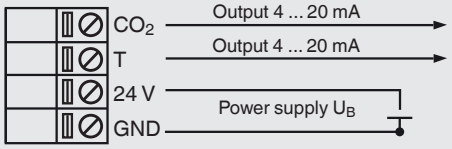

Modbus® output signal

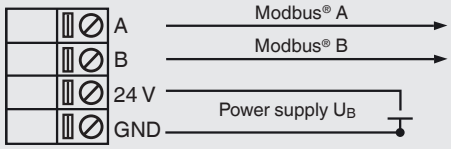

Dimensions in mm [in]

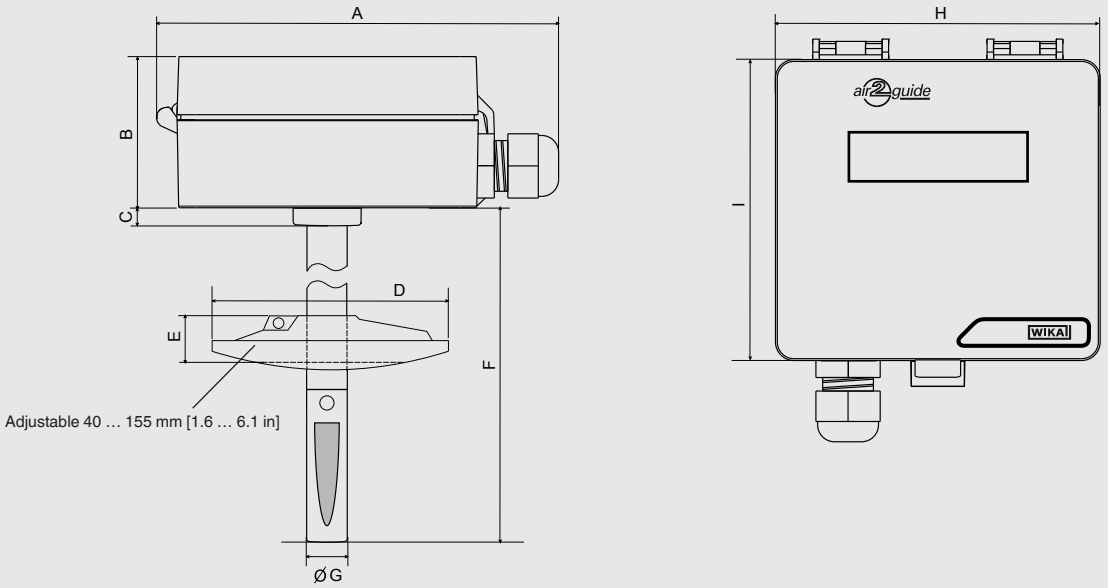

Dimensions in mm [in]								
A	B	C	D	E	F	Ø G	H	I
119 [4.69]	45 [1.77]	5.2 [0.2]	70 [2.76]	15 [0.59]	186 [7.32]	12 [0.47]	95.5 [3.76]	88.5 [3.48]

Approvals

Logo	Description	Country
CE	**EU declaration of conformity**	European Community
	EMV directive	
	RoHS directive	
	WEEE directive	

Certificates (Option)

- 2.2 test report

Approvals and certificates, see website

Ordering information
Model / Version / Output signal / Options

© 2008 WIKA Alexander Wiegand SE & Co. KG, all rights reserved.
The specifications given in this document represent the state of engineering at the time of publishing.
We reserve the right to make modifications to the specifications and materials.

WIKA Alexander Wiegand SE & Co. KG
Alexander-Wiegand-Straße 30
63911 Klingenberg/Germany
Tel. +49 9372 132-0
Fax +49 9372 132-406
info@wika.de
www.wika.de