KombiSIGN 50 / LED Bulb

# LED Bulb 230VAC GN



**Part No.: 956.200.68**

| MECHANICAL DATA | |
|---|---|
| Height | 41 mm |
| Diameter | 29 mm |
| Materials | PA-GF<br>PC |
| Housing colour | Black |
| Weight with packaging | 14 g |
| Product weight | 10 g |

| ELECTRICAL DATA | |
|---|---|
| Operating voltage | 230V |
| Operating voltage type | AC |
| Operating voltage frequency | 50Hz |
| Operating voltage tolerance | +/- 10% |
| Rated operational voltage | 230 VAC |
| Rated operational current | 15 mA |
| Rated inrush current | 500 mA |

| OPTICAL DATA | |
|---|---|
| Light source | LED |
| Light colour | Green |
| Optical signal image | Permanent |
| Service life optical | 50,000 h maximum |
| Lamp fitting/socket | BA15d |

| APPROVAL DATA | |
|---|---|
| WEEE | Yes |
| Conforms with RED directive | No |
| Conforms with ATEX-directive | No |
| Conforms with CCC | No |
| Conforms with FCC | No |
| Conforms with IC | No |
| EAC certificate available | No |
| Conforms with AS-I | No |
| ICAO Certification | No |
| Conforms with DNV | No |
| Conforms with RoHS CN | No |

! For additional installation and mounting information, refer to the appropriate user guide at www.werma.com. This printed copy is for information only and is subject to alteration.

KombiSIGN 50 / LED Bulb

# LED Bulb 230VAC GN

**DRAWING**

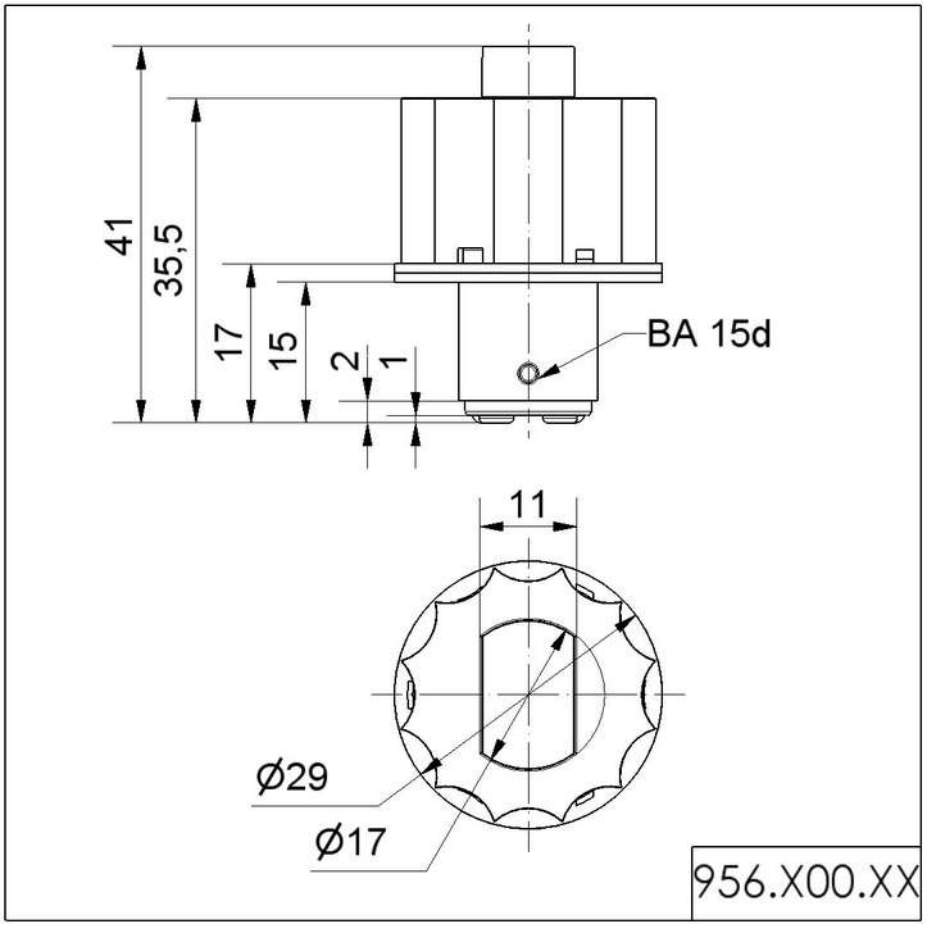


! For additional installation and mounting information, refer to the appropriate user guide at www.werma.com. This printed copy is for information only and is subject to alteration.