Issued July 1997 **1200001045**
10725

Speedfit® plastic push-in fittings stop valve

RS **stock no. 199-2332, 199-2348**

Speedfit® plastic push-in fittings, pipes and valves should not be used for gas, fuel oil or compressed air applications.
The 15mm and 22mm stop valve is for use in cold water systems only.
Not suitable for central heating systems.

Making a connection

Figure 1

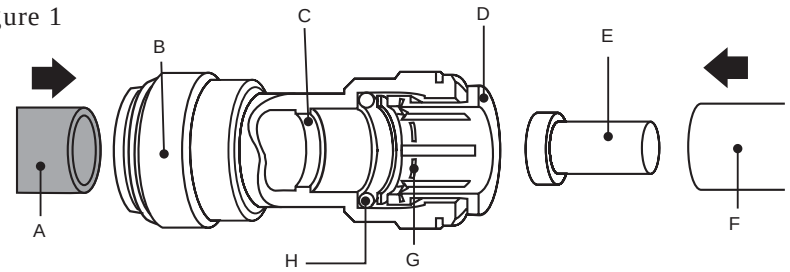

A - Copper pipe
B - Equal straight connector
C - Pipe stop
D - Collet
E - Pipe insert
F - Plastic pipe
G - Stainless steel teeth
H - 'O' ring

Do not insert fingers into the fitting as the stainless steel teeth incorporated within the collet may cause injury.
Cut the pipe square, ensuring it is free of score marks, burrs and sharp edges. It is recommended for installations using plastic pipes, that pipe inserts are used (Figure 1). Push the pipe into the fitting to the internal pipe stop (Figure 1). The collet has stainless steel teeth which grip the pipe, whilst the 'O' ring provides a permanent leak-proof seal.
Pull on the pipe to check it is secure. It is good practice to test the system prior to leaving site and/or before use.

Disconnecting the fitting

Figure 2

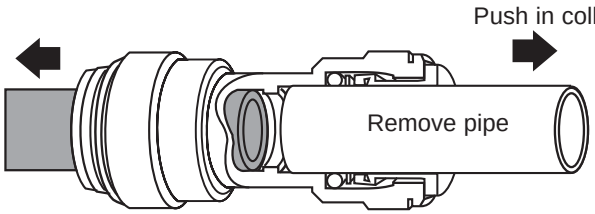

Ensure system is depressurised before removing fitting. Push in collet squarely against face of fitting. With the collet held in this position, the pipe can be withdrawn. The fitting can then be re-used.

Connection to copper and chrome plated copper pipe

The fitting of metric O/D copper pipe follows the same sequence as for plastic.
For chrome plated copper pipe the chrome plating should be removed to the depth of the pipe stop. To ensure maximum grip, the fitting of collet clips is recommended (Figure 3)

Figure 3

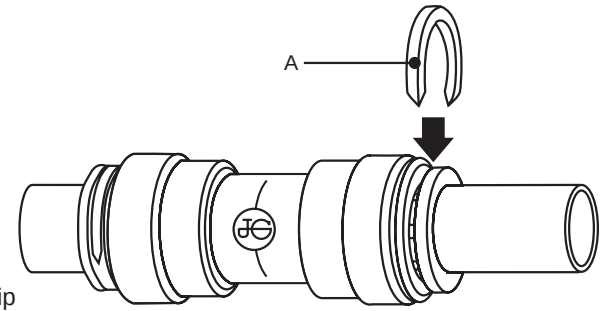

A - Collet clip

For collet clips see RS catalogue plumbing/pipeline/valves/hose section.

The information provided in RS technical literature is believed to be accurate and reliable; however, RS Components assumes no responsibility for inaccuracies or omissions, or for the use of this information, and all use of such information shall be entirely at the user's own risk.
No responsibility is assumed by RS Components for any infringements of patents or other rights of third parties which may result from its use.
Specifications shown in RS Components technical literature are subject to change without notice.

RS Components, PO Box 99, Corby, Northants, NN17 9RS Telephone: 01536 201234
An Electrocomponents Company
© RS Components 1997