# Product datasheet

Specifications



## inductive sensor XS9 M18 - L64mm - full SS 303 - Sn20mm - 12..24VDC - M12

XS918R4PAM12

## Main

| | |
|---|---|
| **Range of product** | Telemecanique Inductive proximity sensors XS |
| **Series name** | Application |
| **Sensor type** | Inductive proximity sensor |
| **Device application** | Harsh environment application |
| **Sensor name** | XS9 |
| **Sensor design** | Cylindrical M18 |
| **Size** | 64 mm |
| **Body type** | Single piece body |
| **Enclosure material** | Stainless steel 303 |
| **Type of output signal** | Discrete |
| **Wiring technique** | 3-wire |
| **[Sn] nominal sensing distance** | 20 mm |
| **Discrete output function** | 1 NO |
| **Discrete output type** | PNP |
| **Electrical connection** | Male connector M12, 4 pins |
| **[Us] rated supply voltage** | 12...24 V DC with reverse polarity protection |
| **Switching capacity in mA** | <= 200 mA with overload and short-circuit protection |
| **IP degree of protection** | IP69K conforming to DIN 40050<br>IP68 conforming to IEC 60529 |

## Complementary

| | |
|---|---|
| **Thread type** | M18 x 1 |
| **Detection face** | Frontal |
| **Detector flush mounting acceptance** | Non flush mountable |
| **Material** | Stainless steel 303 |
| **Front material** | Stainless steel 303 |
| **Sensing range** | > 15...40 mm |
| **Operating zone** | 0…16 mm |
| **Differential travel** | 1...15 % of Sr |

Disclaimer: This documentation is not intended as a substitute for and is not to be used for determining suitability or reliability of these products for specific user applications

| | |
|---|---|
| **Repeat accuracy** | <= 5 % of Sr |
| **Output circuit type** | DC |
| **Status LED** | Output state: 1 LED (yellow) |
| **Supply voltage limits** | 10…30 V DC |
| **Maximum residual current** | 0.1 mA open state |
| **Switching frequency** | <= 200 Hz |
| **Maximum voltage drop** | <2 V (closed) |
| **Current consumption** | <= 10 mA no-load |
| **Maximum delay first up** | 40 ms |
| **Maximum delay response** | 0.00006 ms |
| **Maximum delay recovery** | 0.015 ms |
| **Marking** | CE |
| **Threaded length** | 35 mm |
| **Height** | 18 mm |
| **Length** | 64 mm |
| **Net weight** | 0.051 kg |

## Environment

| | |
|---|---|
| **Product certifications** | cULus |
| **Ambient air temperature for operation** | -25…70 °C |
| **Ambient air temperature for storage** | -25…70 °C |
| **Vibration resistance** | 25 gn amplitude = +/- 1 mm (f = 10…55 Hz) conforming to IEC 60068-2-6 |
| **Shock resistance** | 30 gn for 11 ms conforming to IEC 60068-2-27 |

## Packing Units

| | |
|---|---|
| **Unit Type of Package 1** | PCE |
| **Number of Units in Package 1** | 1 |
| **Package 1 Weight** | 62.0 g |
| **Package 1 Height** | 1.8 cm |
| **Package 1 width** | 21 cm |
| **Package 1 Length** | 19 cm |
| **Unit Type of Package 2** | S01 |
| **Number of Units in Package 2** | 25 |
| **Package 2 Weight** | 1.775 kg |
| **Package 2 Height** | 15 cm |
| **Package 2 width** | 15 cm |
| **Package 2 Length** | 40 cm |

## Offer Sustainability

| | |
|---|---|
| **REACh Regulation** | REACh Declaration |
| **EU RoHS Directive** | Pro-active compliance (Product out of EU RoHS legal scope)<br>EU RoHS Declaration |
| **Mercury free** | Yes |

| | |
|---|---|
| **RoHS exemption information** | Yes |

## Contractual warranty

| | |
|---|---|
| **Warranty** | 18 months |

## Dimensions

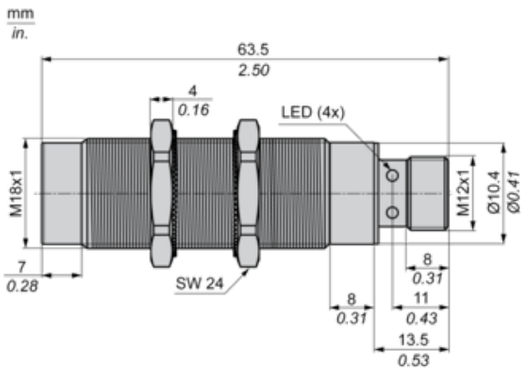
mm
in.
63.5
2.50
4
0.16
LED (4x)
M18x1
M12x1
Ø10.4
Ø0.41
7
0.28
SW 24
8
0.31
11
0.43
8
0.31
13.5
0.53

## Minimum Mounting Distances

Side by side

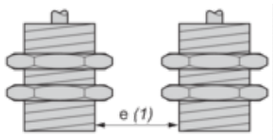


**e (1) ≥** 182 mm/7.16 in.

Face to face

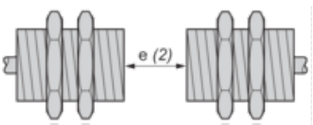


**e (2) ≥** 70 mm/2.75 in.

Facing a metal object

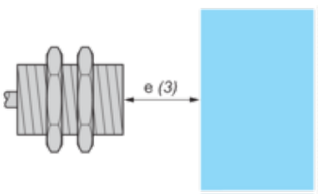


**e (3) ≥** 60 mm/2.36 in

Mounted in a metal support

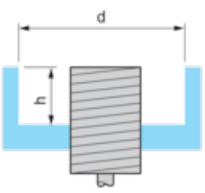


**d ≥** 60 mm/2.36 in

**h ≥** 34 mm/1.34 in

## Wiring Schemes

M12 connector




PNP

